# MSZ-HR SERIES

Compact, high-performance indoor and outdoor units with R32 that is low global warming potential compared with the current refrigerant R410A contribute to room comfort and to prevent global warming.

## "Rank A++/A+" Energy Savings Achieved for Entire Range of Series

DC Inverter SEER A++ SCOP A+

All models in the series, from capacity 25 to 71, have achieved the "Rank A++" for SEER and "Rank A+" for SCOP as energy-savings rating, thanks to Mitsubishi Electric's inverter technologies which are adopted to provide automatic adjustment of operation load according to need.

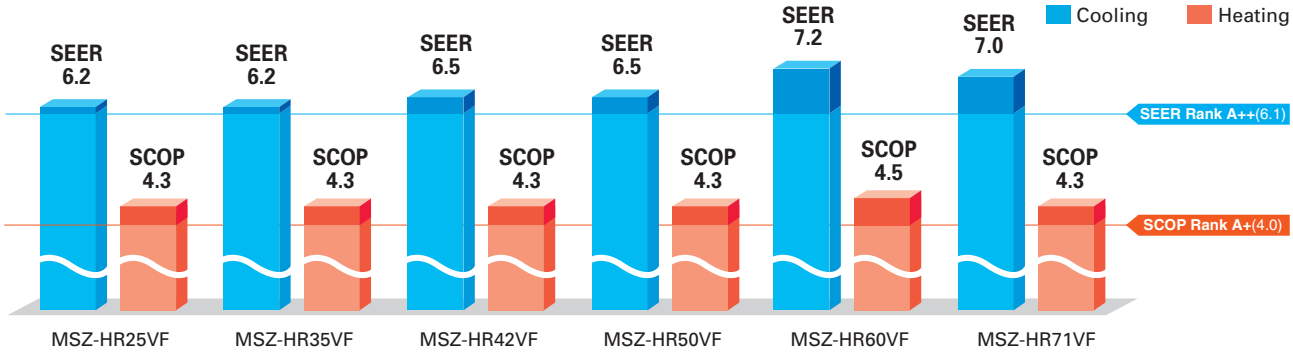


## Simple and Friendly Design

The round front surface provides a simple and friendly impression. And the width of indoor unit is compact, making installation in smaller, tighter spaces possible.

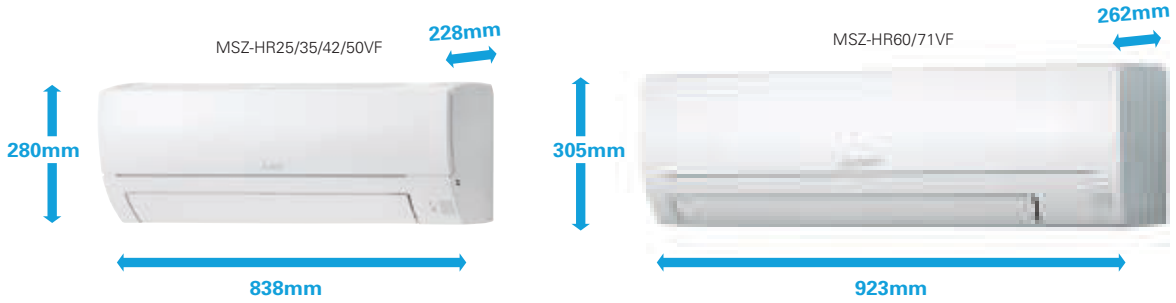


## Wi-Fi and System Control

**Wi-Fi Interface (Optional)**
Optional interface enabling users to control air conditioners and check operating status via devices such as personal computers, tablets and smartphones.

**System Control Interface (Optional)**
- Remote on/off operation is possible by input to the connector.
- Depending on the interface used, connecting a wired remote-control such as the PAR-40MAA is possible.
- Centralised control is possible when connected to M-NET.

*Wi-Fi Interface and System Control Interface cannot be used simultaneously.

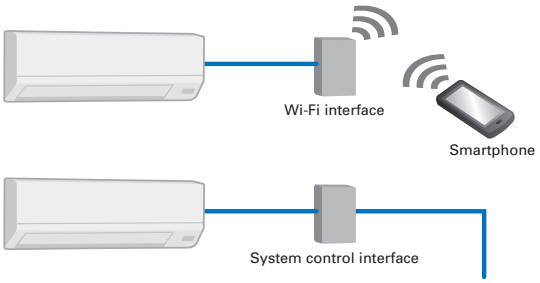

# MSZ-HR SERIES

DC Inverter | Joint Lap | DC Fan Motor | PAM | Grooved Piping | SEER A++ | SCOP A+

## Indoor Unit R32

MSZ-HR25/35/42/50VF

MSZ-HR60/71VF

## Outdoor Unit

MUZ-HR25VF

MUZ-HR35VF

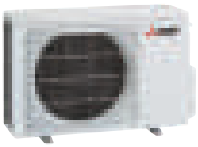

MUZ-HR42/50VF

MUZ-HR60/71VF

## Remote Controller

Econo Cool | Natural White | AUTO VANE | Silver-ion (Optional) | SWING | AUTO | Auto Restart | Low Temp Cooling | (Optional) | Centralised On/Off (Optional) | Group Control (Optional) | Wi-Fi Interface (Optional) | MXZ connection (MXZ-DM only) | Cleaning-free pipe route | Flare connection | Self Diagnosis | Failure Recall

| Type | | | | Inverter Heat Pump | | | | | |
|---|---|---|---|---|---|---|---|---|---|
| Indoor Unit | | | | MSZ-HR25VF | MSZ-HR35VF | MSZ-HR42VF | MSZ-HR50VF | MSZ-HR60VF | MSZ-HR71VF |
| Outdoor Unit | | | | MUZ-HR25VF | MUZ-HR35VF | MUZ-HR42VF | MUZ-HR50VF | MUZ-HR60VF | MUZ-HR71VF |
| Refrigerant | | | | R32(*1) | | | | | |
| Power Supply | Source | | | Outdoor Power supply | | | | | |
| | Outdoor ( V / Phase / Hz ) | | | 230V/Single/50Hz | | | | | |
| Cooling | Design load | | kW | 2.5 | 3.4 | 4.2 | 5.0 | 6.1 | 7.1 |
| | Annual electricity consumption (*2) | | kWh/a | 141 | 191 | 226 | 269 | 296 | 355 |
| | SEER (*4) | | | 6.2 | 6.2 | 6.5 | 6.5 | 7.2 | 7.0 |
| | | Energy efficiency class | | A++ | A++ | A++ | A++ | A++ | A++ |
| | Capacity | Rated | kW | 2.5 | 3.4 | 4.2 | 5.0 | 6.1 | 7.1 |
| | | Min-Max | kW | 0.5-2.9 | 0.9-3.4 | 1.1-4.6 | 1.3-5.0 | 1.7-7.1 | 1.8-7.3 |
| | Total Input | Rated | kW | 0.800 | 1.210 | 1.340 | 2.050 | 1.810 | 2.330 |
| Heating (Average Season)(*5) | Design load | | kW | 1.9 (-10ºC) | 2.4 (-10ºC) | 2.9 (-10ºC) | 3.8 (-10ºC) | 4.6 (-10ºC) | 5.4 (-10ºC) |
| | Declared Capacity | at reference design temperature | kW | 1.9 (-10ºC) | 2.4 (-10ºC) | 2.9 (-10ºC) | 3.8 (-10ºC) | 4.6 (-10ºC) | 5.4 (-10ºC) |
| | | at bivalent temperature | kW | 1.9 (-10ºC) | 2.4 (-10ºC) | 2.9 (-10ºC) | 3.8 (-10ºC) | 4.6 (-10ºC) | 5.4 (-10ºC) |
| | | at operation limit temperature | kW | 1.9 (-10ºC) | 2.4 (-10ºC) | 2.9 (-10ºC) | 3.8 (-10ºC) | 4.6 (-10ºC) | 5.4 (-10ºC) |
| | Back up heating capacity | | kW | 0.0 (-10ºC) | 0.0 (-10ºC) | 0.0 (-10ºC) | 0.0 (-10ºC) | 0.0 (-10ºC) | 0.0 (-10ºC) |
| | Annual electricity consumption (*2) | | kWh/a | 614 | 781 | 928 | 1224 | 1430 | 1755 |
| | SCOP (*4) | | | 4.3 | 4.3 | 4.3 | 4.3 | 4.5 | 4.3 |
| | | Energy efficiency class | | A+ | A+ | A+ | A+ | A+ | A+ |
| | Capacity | Rated | kW | 3.15 | 3.6 | 4.7 | 5.4 | 6.8 | 8.1 |
| | | Min-Max | kW | 0.7-3.5 | 0.9-3.7 | 0.9-5.4 | 1.4-6.5 | 1.5-8.5 | 1.5-9.0 |
| | Total Input | Rated | kW | 0.850 | 0.975 | 1.300 | 1.550 | 1.810 | 2.440 |
| Operating Current (Max) | | | A | 5.0 | 6.7 | 8.5 | 10.0 | 14.1 | 14.1 |
| Indoor Unit | Input | Rated | kW | 0.020 | 0.028 | 0.032 | 0.039 | 0.055 | 0.055 |
| | Operating Current(Max) | | A | 0.2 | 0.27 | 0.3 | 0.36 | 0.5 | 0.5 |
| | Dimensions | H*W*D | mm | 280-838-228 | 280-838-228 | 280-838-228 | 280-838-228 | 305-923-262 | 305-923-262 |
| | Weight | | kg | 8.5 | 8.5 | 9 | 9 | 12.5 | 12.5 |
| | Air Volume (Lo-Mid-Hi-SHi(*3))(Dry/Wet)) | Cooling | $m^3$/min | 3.6 - 5.4 - 7.2 - 9.7 | 3.6 - 5.6 - 7.8 - 11.7 | 6.0 - 8.7 - 10.8 - 13.1 | 6.4 - 9.2 - 11.2 - 13.1 | 10.4 - 12.6 - 15.4 - 19.6 | 10.4 - 12.6 - 15.4 - 19.6 |
| | | Heating | $m^3$/min | 3.3 - 5.4 - 7.4 - 10.1 | 3.3 - 5.4 - 7.4 - 10.5 | 5.6 - 7.9 - 10.8 - 13.4 | 6.1 - 8.3 - 11.2 - 14.5 | 10.7 - 13.1 - 16.7 - 19.6 | 10.7 - 13.1 - 16.7 - 19.6 |
| | Sound Level (SPL) (Lo-Mid-Hi-SHi(*3)) | Cooling | dB(A) | 21 - 30 - 37 - 43 | 22 - 31 - 38 - 46 | 24 - 34 - 39 - 45 | 28 - 36 - 40 - 45 | 33 - 38 - 44 - 50 | 33 - 38 - 44 - 50 |
| | | Heating | dB(A) | 21 - 30 - 37 - 43 | 21 - 30 - 37 - 44 | 24 - 32 - 40 - 46 | 27 - 34 - 41 - 47 | 33 - 38 - 44 - 50 | 33 - 38 - 44 - 50 |
| | Sound Level (PWL) | Cooling | dB(A) | 57 | 60 | 60 | 60 | 65 | 65 |
| Outdoor Unit | Dimensions | H*W*D | mm | 538-699-249 | 538-699-249 | 550-800-285 | 550-800-285 | 714-800-285 | 714-800-285 |
| | Weight | | kg | 23 | 24 | 34 | 35 | 40 | 40 |
| | Air Volume | Cooling | $m^3$/min | 30.3 | 32.2 | 30.4 | 30.4 | 42.8 | 42.8 |
| | | Heating | $m^3$/min | 30.3 | 32.2 | 32.7 | 32.7 | 48.3 | 48.3 |
| | Sound Level (SPL) | Cooling | dB(A) | 50 | 51 | 50 | 50 | 53 | 53 |
| | | Heating | dB(A) | 50 | 51 | 51 | 51 | 57 | 57 |
| | Sound Level (PWL) | Cooling | dB(A) | 63 | 64 | 64 | 64 | 65 | 66 |
| | Operating Current (Max) | | A | 4.8 | 6.4 | 8.2 | 9.6 | 13.6 | 13.6 |
| | Breaker Size | | A | 10 | 10 | 10 | 12 | 16 | 16 |
| Ext. Piping | Diameter | Liquid/Gas | mm | 6.35 / 9.52 | 6.35 / 9.52 | 6.35 / 9.52 | 6.35 / 9.52 | 6.35 / 12.7 | 6.35 / 12.7 |
| | Max.Length | Out-In | m | 20 | 20 | 20 | 20 | 30 | 30 |
| | Max.Height | Out-In | m | 12 | 12 | 12 | 12 | 15 | 15 |
| Guaranteed Operating Range (Outdoor) | | Cooling | ℃ | -10 ~ +46 | -10 ~ +46 | -10 ~ +46 | -10 ~ +46 | -10 ~ +46 | -10 ~ +46 |
| | | Heating | ℃ | -10 ~ +24 | -10 ~ +24 | -10 ~ +24 | -10 ~ +24 | -10 ~ +24 | -10 ~ +24 |

(*1) Refrigerant leakage contributes to climate change. Refrigerant with lower global warming potential (GWP) would contribute less to global warming than a refrigerant with higher GWP, if leaked to the atmosphere. This appliance contains a refrigerant fluid with a GWP equal to 550. This means that if 1 kg of this refrigerant fluid would be leaked to the atmosphere, the impact on global warming would be 550 times higher than 1 kg of $CO_2$, over a period of 100 years. Never try to interfere with the refrigerant circuit yourself or disassemble the product yourself and always ask a professional.
The GWP of R32 is 675 in the IPCC 4th Assessment Report.
(*2) Energy consumption based on standard test results. Actual energy consumption will depend on how the appliance is used and where it is located.
(*3) SHi: Super High
(*4) SEER, SCOP and other related description are based on COMMISSION DELEGATED REGULATION (EU) No.626/2011. The temperature conditions for calculating SCOP are based on "Average Season".
(*5) Please see page 51-52 for heating (warmer season) specifications.

# MSY–TP SERIES

R32

MSY-TP35/50VF

Cooling only model with high-perfomance provide high SHF in various environments thanks to wide operation range.

## High Energy-Saving Performance with High SHF

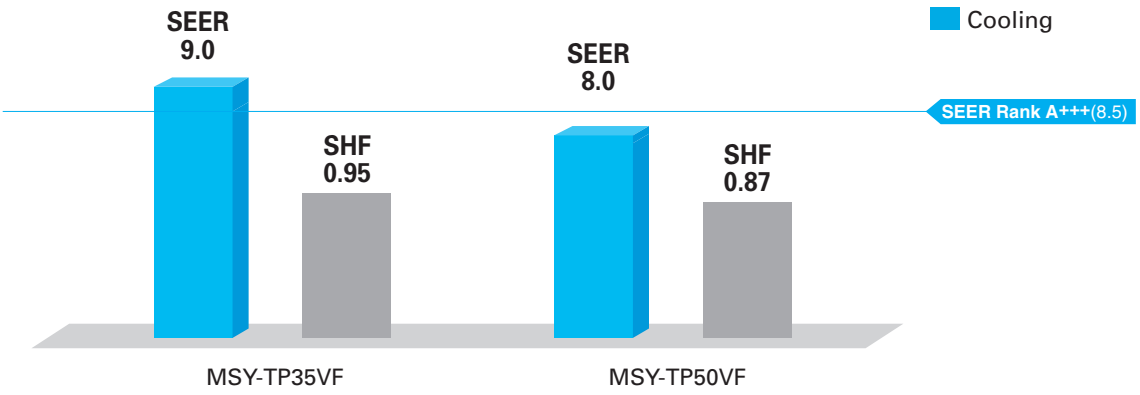


## Wide Cooling Operating Range

As a result of an extended operating range in cooling, these models accommodate a wide range of usage environments and applications.

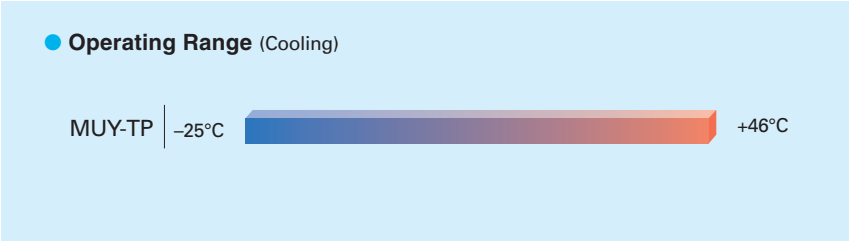

# MSY-TP SERIES

DC Inverter | Joint Lap | DC Fan Motor | PAM | Grooved Piping | 35 SEER A+++

## Indoor Unit R32

MSY-TP35/50VF

## Outdoor Unit R32

MUY-TP35/TP50VF

## Remote Controller

- Wired remote controller can be connected to indoor unit.

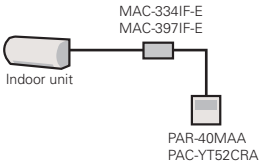


Pure White | AUTO VANE | Silver-ion (Optional) | SWING | AUTO | Auto Restart | Cleaning-free pipe route | Flare connection | Self Diagnosis | Failure Recall

| Type | | | | Inverter Heat Pump | |
|---|---|---|---|---|---|
| Indoor Unit | | | | MSY-TP35VF | MSY-TP50VF |
| Outdoor Unit | | | | MUY-TP35VF | MUY-TP50VF |
| Refrigerant | | | | R32 (*1) | |
| Power Supply | Source | | | Indoor Power supply | |
| | Outdoor ( V / Phase / Hz ) | | | 230V / Single / 50Hz | |
| Cooling | Design load | | kW | 3.5 | 5.0 |
| | Annual electricity consumption (*2) | | kWh/a | 136 | 218 |
| | SEER (*4) | | | 9.0 | 8.0 |
| | | Energy efficiency class | | A+++ | A++ |
| | Capacity | Rated | kW | 3.5 | 5.0 |
| | | Min-Max | kW | 1.5 - 4.0 | 1.5 - 5.7 |
| | Total Input | Rated | kW | 0.760 | 1.450 |
| Heating (Average Season)(*5) | Design load | | kW | - | - |
| | Declared Capacity | at reference design temperature | kW | - | - |
| | | at bivalent temperature | kW | - | - |
| | | at operation limit temperature | kW | - | - |
| | Back up heating capacity | | kW | - | - |
| | Annual electricity consumption (*2) | | kWh/a | - | - |
| | SCOP (*4) | | | - | - |
| | | Energy efficiency class | | - | - |
| | Capacity | Rated | kW | - | - |
| | | Min-Max | kW | - | - |
| | Total Input | Rated | kW | - | - |
| Operating Current (Max) | | | A | 9.6 | 9.6 |
| Indoor Unit | Input | Rated | kW | 0.033 | 0.034 |
| | Operating Current (Max) | | A | 0.4 | 0.4 |
| | Dimensions | H*W*D | mm | 305-923-250 | 305-923-250 |
| | Weight | | kg | 12.5 | 12.5 |
| | Air Volume (Lo-Mid-Hi-SHi(*3)(Dry/Wet)) | Cooling | $m^3$/min | 10.1 - 11.6 - 13.7 - 16.4 | 10.1 - 11.6 - 13.7 - 16.4 |
| | | Heating | $m^3$/min | - | - |
| | Sound Level (SPL) (Lo-Mid-Hi-SHi(*3)) | Cooling | dB(A) | 31 - 36 - 40 - 45 | 31 - 36 - 40 - 45 |
| | | Heating | dB(A) | - | - |
| | Sound Level (PWL) | Cooling | dB(A) | 60 | 60 |
| | Breaker Size | | A | 10 | 10 |
| Outdoor Unit | Dimensions | H*W*D | mm | 550-800-285 | 550-800-285 |
| | Weight | | kg | 34 | 34 |
| | Air Volume | Cooling | $m^3$/min | 29.3 | 29.3 |
| | | Heating | $m^3$/min | - | - |
| | Sound Level (SPL) | Cooling | dB(A) | 45 | 47 |
| | | Heating | dB(A) | - | - |
| | Sound Level (PWL) | Cooling | dB(A) | 58 | 61 |
| | Operating Current (Max) | | A | 9.2 | 9.2 |
| Ext. Piping | Diameter | Liquid/Gas | mm | 6.35/9.52 | 6.35/9.52 |
| | Max.Length | Out-In | m | 20 | 20 |
| | Max.Height | Out-In | m | 12 | 12 |
| Guaranteed Operating Range (Outdoor) | | Cooling | ℃ | -25 ~ +46 | -25 ~ +46 |
| | | Heating | ℃ | - | - |

(*1) Refrigerant leakage contributes to climate change. Refrigerant with lower global warming potential (GWP) would contribute less to global warming than a refrigerant with higher GWP, if leaked to the atmosphere. This appliance contains a refrigerant fluid with a GWP equal to 550. This means that if 1 kg of this refrigerant fluid would be leaked to the atmosphere, the impact on global warming would be 550 times higher than 1 kg of $CO_2$, over a period of 100 years. Never try to interfere with the refrigerant circuit yourself or disassemble the product yourself and always ask a professional.
The GWP of R32 is 675 in the IPCC 4th Assessment Report.
(*2) Energy consumption based on standard test results. Actual energy consumption will depend on how the appliance is used and where it is located.
(*3) SHi: Super High
(*4) SEER and other related description are based on COMMISSION DELEGATED REGULATION (EU) No.626/2011.

R410A

MSZ-DM25/35VA

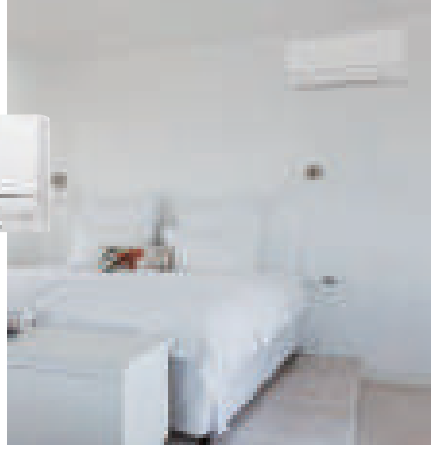

# MSZ-D SERIES

Compact, high-performance indoor and outdoor units equipped with high-performance air purifying filters contribute to greater room comfort. Wi-Fi and system controller connectivity enable enhanced expandability.

## Advanced Inverter Control – Efficient Operation All the Time

DC Inverter | 25/35 SEER A+ | 25/35 SCOP A+

Mitsubishi Electric's cutting-edge inverter technologies are adopted to provide automatic adjustment of operation load according to need. This reduces excessive consumption of electricity, and thereby realises an Energy Rank "A+".

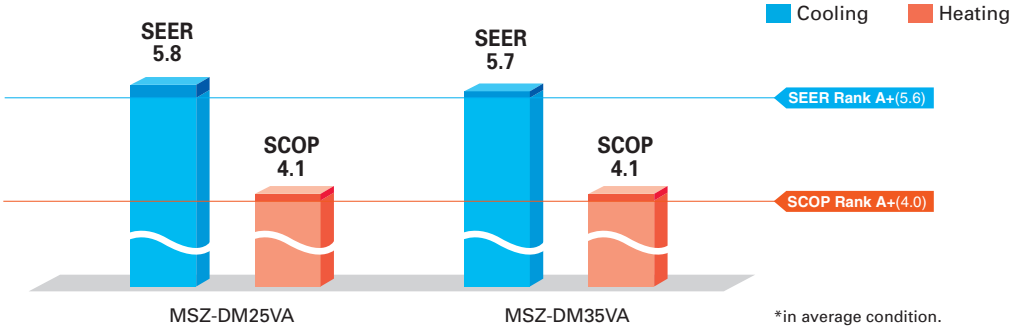


## Wider Cooling Operating Range

As a result of an extended operating range in cooling, these models accommodate a wider range of usage environments and applications than previous models.

## Wi-Fi and System Control

**Wi-Fi Interface (Optional)**
Optional interface enabling users to control air conditioners and check operating status via devices such as personal computers, tablets and smartphones.

**System Control Interface (Optional)**
- Remote on/off operation is possible by input to the connector.
- Depending on the interface used, connecting a wired remote-control such as the PAR-40MAA is possible.
- Centralised control is possible when connected to M-NET.

*Wi-Fi Interface and System Control Interface cannot be used simultaneously.

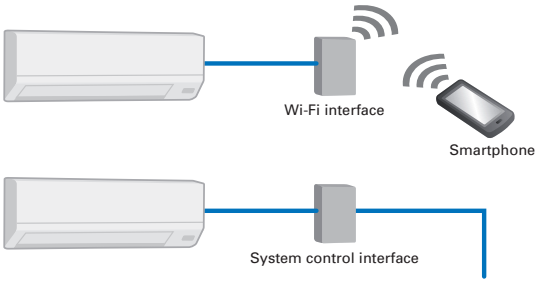


## Silver-ionized Air Purifying Filter

The high performance filter is attached as standard. Captures the bacteria, pollen and other allergens in the air and neutralises them.

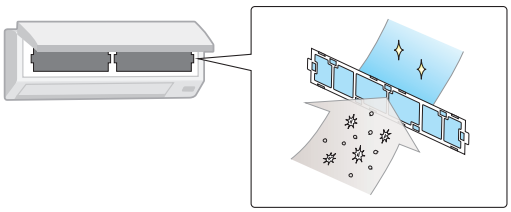

## Compact Units

The width of both indoor and outdoor units are compact, making installation in smaller, tighter spaces possible.

Indoor Unit: MSZ-DM25VA

Only 799mm width

Outdoor Unit: MUZ-DM25/35VA

Only 699mm width

# MSZ-D SERIES

DC Inverter | Joint Lap | DC Fan Motor | PAM | Grooved Piping | SEER A+ | SCOP A+

## Indoor Unit R410A

MSZ-DM25/35VA

## Outdoor Unit R410A

MUZ-DM25/35VA

## Remote Controller

Econo Cool | Pure White | AUTO VANE | Silver-ion | SWING | AUTO | Auto Restart | Low Temp Cooling | Optional | Centralised On/Off Optional | Group Control Optional | Wi-Fi Interface Optional | MXZ connection MXZ-DM only | Cleaning-free pipe route | Flare connection | Self Diagnosis | Failure Recall

| Type | | | | Inverter Heat Pump | |
|---|---|---|---|---|---|
| Indoor Unit | | | | MSZ-DM25VA | MSZ-DM35VA |
| Outdoor Unit | | | | MUZ-DM25VA | MUZ-DM35VA |
| Refrigerant | | | | R410A(*1) | |
| Power Supply | Source | | | Indoor Power supply | |
| | Outdoor ( V / Phase / Hz ) | | | 230V/Single/50Hz | |
| Cooling | Design load | | kW | 2.5 | 3.1 |
| | Annual electricity consumption (*2) | | kWh/a | 149 | 190 |
| | SEER (*4) | | | 5.8 | 5.7 |
| | | Energy efficiency class | | A+ | A+ |
| | Capacity | Rated | kW | 2.5 | 3.15 |
| | | Min-Max | kW | 1.3 - 3.0 | 1.4 - 3.5 |
| | Total Input | Rated | kW | 0.710 | 1.020 |
| Heating (Average Season)(*5) | Design load | | kW | 1.9 (-10ºC) | 2.4 (-10ºC) |
| | Declared Capacity | at reference design temperature | kW | 1.9 (-10ºC) | 2.4 (-10ºC) |
| | | at bivalent temperature | kW | 1.9 (-10ºC) | 2.4 (-10ºC) |
| | | at operation limit temperature | kW | 1.9 (-10ºC) | 2.4 (-10ºC) |
| | Back up heating capacity | | kW | 0.0 (-10ºC) | 0.0 (-10ºC) |
| | Annual electricity consumption (*2) | | kWh/a | 647 | 809 |
| | SCOP (*4) | | | 4.1 | 4.1 |
| | | Energy efficiency class | | A+ | A+ |
| | Capacity | Rated | kW | 3.15 | 3.6 |
| | | Min-Max | kW | 0.9 - 3.5 | 1.1 - 4.1 |
| | Total Input | Rated | kW | 0.850 | 0.975 |
| Operating Current (Max) | | | A | 5.8 | 6.5 |
| Indoor Unit | Input | Rated | kW | 0.020 | 0.024 |
| | Operating Current(Max) | | A | 0.3 | 0.3 |
| | Dimensions | H*W*D | mm | 290-799-232 | 290-799-232 |
| | Weight | | kg | 9 | 9 |
| | Air Volume (SLo-Lo-Mid-Hi-SHi(*3)(Dry/Wet)) | Cooling | $m^3$/min | 3.8 - 5.5 - 7.3 - 9.5 | 3.8 - 5.7 - 7.8 - 10.9 |
| | | Heating | $m^3$/min | 3.5 - 5.5 - 7.5 - 10.0 | 3.5 - 5.5 - 7.5 - 10.3 |
| | Sound Level (SPL) (SLo-Lo-Mid-Hi-SHi(*3)) | Cooling | dB(A) | 22 - 30 - 37 - 43 | 22 - 31 - 38 - 45 |
| | | Heating | dB(A) | 23 - 30 - 37 - 43 | 23 - 30 - 37 - 44 |
| | Sound Level (PWL) | Cooling | dB(A) | 57 | 60 |
| Outdoor Unit | Dimensions | H*W*D | mm | 538-699-249 | 538-699-249 |
| | Weight | | kg | 24 | 25 |
| | Air Volume | Cooling | $m^3$/min | 31.5 | 31.5 |
| | | Heating | $m^3$/min | 31.5 | 31.5 |
| | Sound Level (SPL) | Cooling | dB(A) | 50 | 51 |
| | | Heating | dB(A) | 50 | 51 |
| | Sound Level (PWL) | Cooling | dB(A) | 63 | 64 |
| | Operating Current (Max) | | A | 5.5 | 6.2 |
| | Breaker Size | | A | 10 | 10 |
| Ext. Piping | Diameter | Liquid/Gas | mm | 6.35/9.52 | 6.35/9.52 |
| | Max.Length | Out-In | m | 20 | 20 |
| | Max.Height | Out-In | m | 12 | 12 |
| Guaranteed Operating Range (Outdoor) | | Cooling | ℃ | -10 ~ +46 | -10 ~ +46 |
| | | Heating | ℃ | -10 ~ +24 | -10 ~ +24 |

(*1) Refrigerant leakage contributes to climate change. Refrigerant with lower global warming potential (GWP) would contribute less to global warming than a refrigerant with higher GWP, if leaked to the atmosphere. This appliance contains a refrigerant fluid with a GWP equal to 1975. This means that if 1 kg of this refrigerant fluid would be leaked to the atmosphere, the impact on global warming would be 1975 times higher than 1 kg of $CO_2$, over a period of 100 years. Never try to interfere with the refrigerant circuit yourself or disassemble the product yourself and always ask a professional.
The GWP of R410A is 2088 in the IPCC 4th Assessment Report.
(*2) Energy consumption based on standard test results. Actual energy consumption will depend on how the appliance is used and where it is located.
(*3) SHi: Super High
(*4) SEER, SCOP and other related description are based on COMMISSION DELEGATED REGULATION (EU) No.626/2011. The temperature conditions for calculating SCOP are based on "Average Season".
(*5) Please see page 51-52 for heating (warmer season) specifications.

R410A

MSZ-HJ25/35/50VA

MSZ-HJ60/71VA

# MSZ-H SERIES

Compact, high-performance indoor and outdoor units and advanced inverter technologies provide superior energy savings and comfort in all rooms.

## Stylish Design with Flat Panel Front

A stylish flat panel design is employed for the front of the indoor unit. The simple look matches room aesthetics.

## Advanced Inverter Control – Efficient Operation All the Time

DC Inverter

| 25/35 SEER | 25/35 SCOP | 50/60/71 SEER | 50/60/71 SCOP |
|---|---|---|---|
| A | A | A+ | A+ |

Mitsubishi Electric's cutting-edge inverter technologies are adopted to provide automatic adjustment of operation load according to need. This reduces excessive consumption of electricity, and thereby realises an Energy Rank "A" rating for 25/35 classes and "A+" for 50/60/71 classes.

## Silent Operation

Quiet, relaxing space is within reach. Operational noise is a low 22dB (25/35 classes). Operation is so silent you might even forget the air conditioner is on.

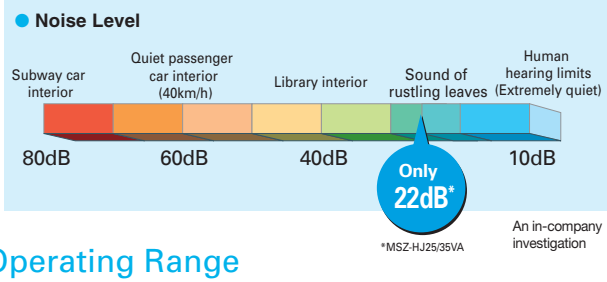


## Long Piping Length

Compared to previous models, the piping length is significantly increased, further enhancing the ease and flexibility of installation.

| | MSZ-HJ60/71 | MSZ-HJ25/35/50 | MSZ-HC |
|---|---|---|---|
| Max piping length | 30m | 20m | 10m |
| Max piping height difference | 15m | 12m | 5m |

## Operating Range

As a result of an extended operating range in cooling, these models accommodate a wider range of usage environments and applications than previous models.

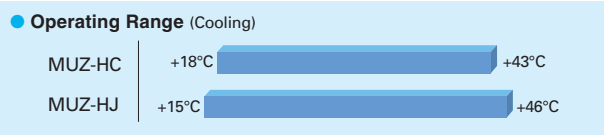


## Compact Units

The widths of both indoor and outdoor units are compact, making installation in smaller, tighter spaces possible.

Indoor Unit: MSZ-HJ25/35/50VA

Only 799mm width

Outdoor Unit: MUZ-HJ25/35VA

Only 699mm width

Compared to other models, width is down by 16%.

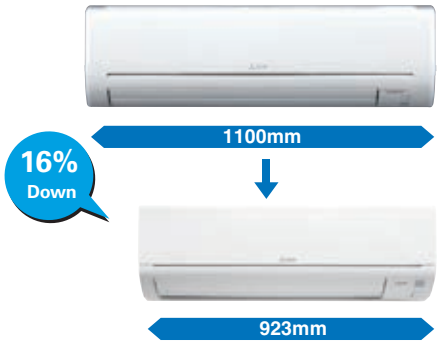

# MSZ-H SERIES

DC Inverter | Joint Lap | 50/60/71 DC Fan Motor | PAM | Grooved Piping | 50/60/71 SEER A+ | 50/60/71 SCOP A+

## Indoor Unit R410A

MSZ-HJ25/35/50VA

MSZ-HJ60/71VA

## Outdoor Unit R410A

MUZ-HJ25/35VA

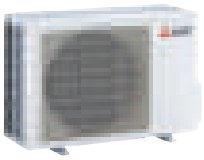

MUZ-HJ50VA

MUZ-HJ60/71VA

## Remote Controller

Econo Cool | Pure White | AUTO VANE | Silver-ion (Optional) | SWING | AUTO | Auto Restart | Cleaning-free pipe resin | Flare connection | Self Diagnosis | Failure Recall | MXZ connection (25 / 35 / 50 MXZ-DM only)

| Type | | | | Inverter Heat Pump | | | | |
|---|---|---|---|---|---|---|---|---|
| Indoor Unit | | | | MSZ-HJ25VA | MSZ-HJ35VA | MSZ-HJ50VA | MSZ-HJ60VA | MSZ-HJ71VA |
| Outdoor Unit | | | | MUZ-HJ25VA | MUZ-HJ35VA | MUZ-HJ50VA | MUZ-HJ60VA | MUZ-HJ71VA |
| Refrigerant | | | | R410A(*1) | | | | |
| Power Supply | Source | | | Indoor Power supply | | | | |
| | Outdoor ( V / Phase / Hz ) | | | 230V/Single/50Hz | | | | |
| Cooling | Design load | | kW | 2.5 | 3.1 | 5.0 | 6.1 | 7.1 |
| | Annual electricity consumption (*2) | | kWh/a | 171 | 212 | 292 | 354 | 441 |
| | SEER (*4) | | | 5.1 | 5.1 | 6.0 | 6.0 | 5.6 |
| | | Energy efficiency class | | A | A | A+ | A+ | A+ |
| | Capacity | Rated | kW | 2.5 | 3.15 | 5.0 | 6.1 | 7.1 |
| | | Min-Max | kW | 1.3 - 3.0 | 1.4 - 3.5 | 1.3 - 5.0 | 1.7 - 7.1 | 1.8 - 7.1 |
| | Total Input | Rated | kW | 0.730 | 1.040 | 2.050 | 1.900 | 2.330 |
| Heating (Average Season)(*5) | Design load | | kW | 1.9 (-10ºC) | 2.4 (-10ºC) | 3.8 (-10ºC) | 4.6 (-10ºC) | 5.4 (-10ºC) |
| | Declared Capacity | at reference design temperature | kW | 1.9 (-10ºC) | 2.4 (-10ºC) | 3.8 (-10ºC) | 4.6 (-10ºC) | 5.4 (-10ºC) |
| | | at bivalent temperature | kW | 1.9 (-10ºC) | 2.4 (-10ºC) | 3.8 (-10ºC) | 4.6 (-10ºC) | 5.4 (-10ºC) |
| | | at operation limit temperature | kW | 1.9 (-10ºC) | 2.4 (-10ºC) | 3.8 (-10ºC) | 4.6 (-10ºC) | 5.4 (-10ºC) |
| | Back up heating capacity | | kW | 0.0 (-10ºC) | 0.0 (-10ºC) | 0.0 (-10ºC) | 0.0 (-10ºC) | 0.0 (-10ºC) |
| | Annual electricity consumption (*2) | | kWh/a | 698 | 885 | 1267 | 1544 | 1854 |
| | SCOP (*4) | | | 3.8 | 3.8 | 4.2 | 4.1 | 4.0 |
| | | Energy efficiency class | | A | A | A+ | A+ | A+ |
| | Capacity | Rated | kW | 3.15 | 3.6 | 5.4 | 6.8 | 8.1 |
| | | Min-Max | kW | 0.9 - 3.5 | 1.1 - 4.1 | 1.4 - 6.5 | 1.5 - 8.4 | 1.5 - 8.5 |
| | Total Input | Rated | kW | 0.870 | 0.995 | 1.480 | 1.970 | 2.440 |
| Operating Current (Max) | | | A | 5.8 | 6.5 | 9.8 | 12.5 | 12.5 |
| Indoor Unit | Input | Rated | kW | 0.020 | 0.024 | 0.037 | 0.055 | 0.055 |
| | Operating Current(Max) | | A | 0.3 | 0.3 | 0.4 | 0.5 | 0.5 |
| | Dimensions | H*W*D | mm | 290-799-232 | 290-799-232 | 290-799-232 | 305-923-250 | 305-923-250 |
| | Weight | | kg | 9 | 9 | 9 | 13 | 13 |
| | Air Volume (SLo-Lo-Mid-Hi-SHi(*3))(Dry/Wet)) | Cooling | $m^3$/min | 3.8 - 5.5 - 7.3 - 9.5 | 3.8 - 5.7 - 7.8 - 10.9 | 6.3 - 9.1 - 11.1 - 12.9 | 9.3 - 12.2 - 15.0 - 19.9 | 10.0 - 12.2 - 15.0 - 19.9 |
| | | Heating | $m^3$/min | 3.5 - 5.5 - 7.5 - 10.0 | 3.5 - 5.5 - 7.5 - 10.3 | 6.1 - 8.3 - 11.1 - 14.3 | 9.4 - 12.5 - 16.0 - 19.9 | 10.3 - 12.7 - 16.4 - 19.9 |
| | Sound Level (SPL) (SLo-Lo-Mid-Hi-SHi(*3)) | Cooling | dB(A) | 22 - 30 - 37 - 43 | 22 - 31 - 38 - 45 | 28 - 36 - 40 - 45 | 31 - 38 - 44 - 50 | 33 - 38 - 44 - 50 |
| | | Heating | dB(A) | 23 - 30 - 37 - 43 | 23 - 30 - 37 - 44 | 27 - 34 - 41 - 47 | 31 - 38 - 44 - 49 | 33 - 38 - 44 - 49 |
| | Sound Level (PWL) | Cooling | dB(A) | 57 | 60 | 60 | 65 | 65 |
| Outdoor Unit | Dimensions | H*W*D | mm | 538-699-249 | 538-699-249 | 550-800-285 | 880-840-330 | 880-840-330 |
| | Weight | | kg | 24 | 25 | 36 | 55 | 55 |
| | Air Volume | Cooling | $m^3$/min | 31.5 | 31.5 | 36.3 | 47.9 | 49.3 |
| | | Heating | $m^3$/min | 31.5 | 31.5 | 34.8 | 47.9 | 47.9 |
| | Sound Level (SPL) | Cooling | dB(A) | 50 | 50 | 50 | 55 | 55 |
| | | Heating | dB(A) | 50 | 50 | 51 | 55 | 55 |
| | Sound Level (PWL) | Cooling | dB(A) | 63 | 64 | 64 | 65 | 66 |
| | Operating Current (Max) | | A | 5.5 | 6.2 | 9.4 | 12.0 | 12.0 |
| | Breaker Size | | A | 10 | 10 | 12 | 16 | 16 |
| Ext. Piping | Diameter | Liquid/Gas | mm | 6.35/9.52 | 6.35/9.52 | 6.35/12.7 | 6.35/15.88 | 9.52/15.88 |
| | Max.Length | Out-In | m | 20 | 20 | 20 | 30 | 30 |
| | Max.Height | Out-In | m | 12 | 12 | 12 | 15 | 15 |
| Guaranteed Operating Range (Outdoor) | | Cooling | ℃ | +15 ~ +46 | +15 ~ +46 | +15 ~ +46 | +15 ~ +46 | +15 ~ +46 |
| | | Heating | ℃ | -10 ~ +24 | -10 ~ +24 | -10 ~ +24 | -10 ~ +24 | -10 ~ +24 |

(*1) Refrigerant leakage contributes to climate change. Refrigerant with lower global warming potential (GWP) would contribute less to global warming than a refrigerant with higher GWP, if leaked to the atmosphere. This appliance contains a refrigerant fluid with a GWP equal to 1975. This means that if 1 kg of this refrigerant fluid would be leaked to the atmosphere, the impact on global warming would be 1975 times higher than 1 kg of $CO_2$, over a period of 100 years. Never try to interfere with the refrigerant circuit yourself or disassemble the product yourself and always ask a professional.
The GWP of R410A is 2088 in the IPCC 4th Assessment Report.
(*2) Energy consumption based on standard test results. Actual energy consumption will depend on how the appliance is used and where it is located.
(*3) SHi: Super High
(*4) SEER, SCOP and other related description are based on COMMISSION DELEGATED REGULATION (EU) No.626/2011. The temperature conditions for calculating SCOP are based on "Average Season".
(*5) Please see page 51-52 for heating (warmer season) specifications.

# MFZ SERIES

High Capacity, Energy Savings and a Design in Harmony with Living Spaces
Raise the Value of Your Room to the Next Level.

MFZ-KT25/35/50/60VG

## Simple, Flat Design

Uneven surfaces have been smoothed to provide a simple design with linear beauty, harmonised with all types of interiors.

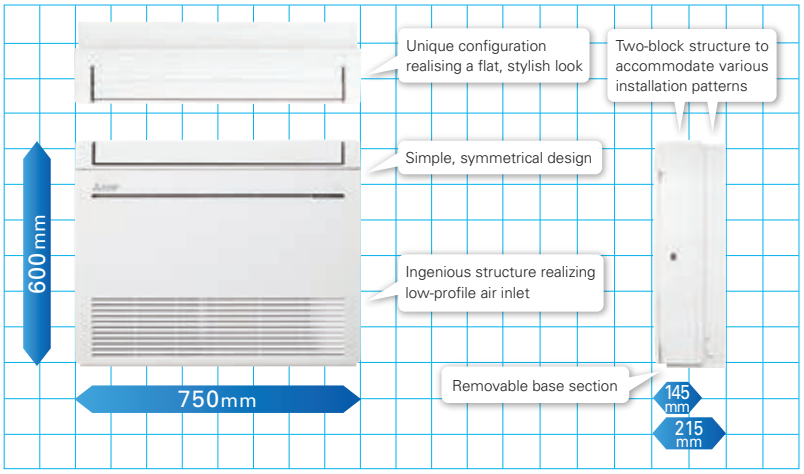


Images of installed unit

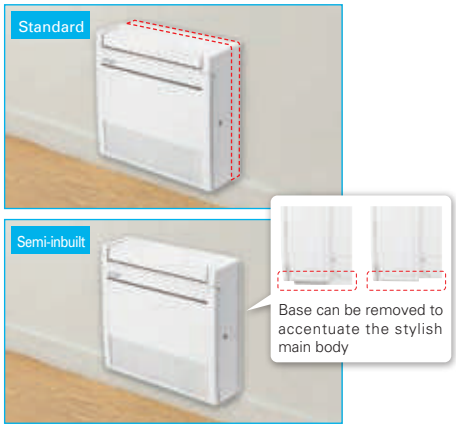


## New Line-up

New models have been introduced to expand the line-up. The diverse selection enables the best solution for both customers and locations.

| Capacity | 2.5kW | 3.5kW | 5.0kW | 6.0kW |
|---|---|---|---|---|
| MFZ-KJ | ✓ | ✓ | ✓ | |
| MFZ-KT | ✓ | ✓ | ✓ | ✓ |

## Multi-flow Vane

Three uniquely shaped vanes control the airflow and allow the freedom to customize comfort according to preferences.

When heating

**Rapid heating**

Warm air is blown out in a downward direction and then sucked back into the unit to quickly raise the temperature of the air being blown out.

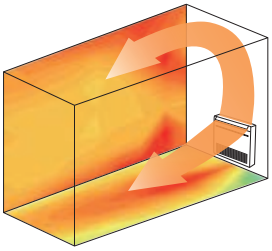

When cooling

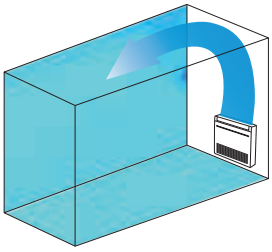

* The downward airflow is also possible as well as heating.

## Weekly Timer (Introduced in response to market demand)

Temperature settings and On/Off control can be managed over a period of one week using the Weekly Timer. Up to eight setting patterns per calendar day are possible.

## Quiet Operation

The indoor unit noise level is as low as 19dB for MFZ Series, offering a peaceful inside environment.

* Single connection only.

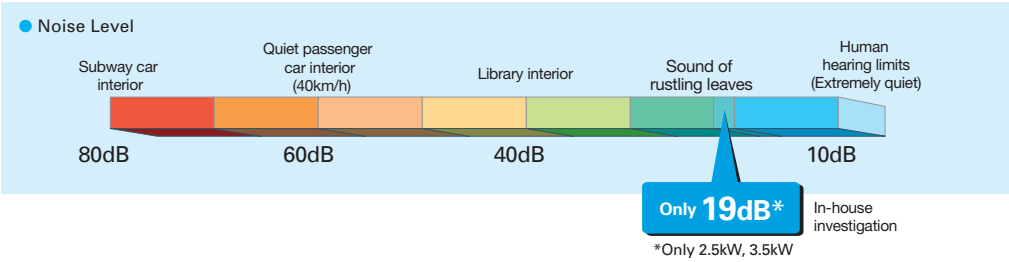

# MFZ-KT SERIES

DC Inverter | DC Fan Motor | PAM | Grooved Piping | SEER A++ | SCOP A+

## Indoor Unit R32

GOOD DESIGN

MFZ-KT25/35/50/60VG

## Outdoor Unit R32

SUZ-M25/35VA

SUZ-M50VA

SUZ-M60VA

## Remote Controller

Enclosed in MFZ-KT

*optional

*optional

*optional

Econo Cool | Pure White | AUTO VANE | Silver-ion | Air Purifying | SWING | AUTO | Weekly Timer | i save | ACO | Auto Restart | Low Temp Cooling | Optional | Group Control (Optional) | M-NET connection (Optional) | Wi-Fi Interface (Optional) | MXZ connection | Cleaning-free, pipe reuse | Flare connection | Self Diagnosis | Failure Recall

| Type | | | | Inverter Heat Pump | | | |
|---|---|---|---|---|---|---|---|
| Indoor Unit | | | | MFZ-KT25VG | MFZ-KT35VG | MFZ-KT50VG | MFZ-KT60VG |
| Outdoor Unit | | | | SUZ-M25VA | SUZ-M35VA | SUZ-M50VA | SUZ-M60VA |
| Refrigerant | | | | R32(*1) | R32(*1) | R32(*1) | R32(*1) |
| Power Supply | Source | | | Outdoor power supply | | | |
| | Outdoor(V/Phase/Hz) | | | 230 / Single / 50 | | | |
| Cooling | Design load | | kW | 2.5 | 3.5 | 5.0 | 6.1 |
| | Annual electricity consumption (*2) | | kWh/a | 134 | 185 | 257 | 343 |
| | SEER (*4) | | | 6.5 | 6.6 | 6.8 | 6.2 |
| | | Energy efficiency class | | A++ | A++ | A++ | A++ |
| | Capacity | Rated | kW | 2.5 | 3.5 | 5.0 | 6.1 |
| | | Min-Max | kW | 1.6 - 3.2 | 0.9 - 3.9 | 1.2 - 5.6 | 1.7 - 6.3 |
| | Total Input | Rated | kW | 0.62 | 1.06 | 1.55 | 1.84 |
| Heating (Average Season) | Design load | | kW | 2.2 | 2.6 | 4.3 | 4.6 |
| | Declared Capacity | at reference design temperature | kW | 2.0 (-10℃) | 2.3 (-10℃) | 3.5 (-10℃) | 4.1 (-10℃) |
| | | at bivalent temperature | kW | 2.0 (-7℃) | 2.3 (-7℃) | 3.9 (-7℃) | 4.1 (-7℃) |
| | | at operation limit temperature | kW | 2.0 (-10℃) | 2.3 (-10℃) | 3.5 (-10℃) | 4.1 (-10℃) |
| | Back up heating capacity | | kW | 0.2 | 0.3 | 0.8 | 0.5 |
| | Annual electricity consumption (*2) | | kWh/a | 732 | 825 | 1423 | 1568 |
| | SCOP (*4) | | | 4.2 | 4.4 | 4.2 | 4.1 |
| | | Energy efficiency class | | A+ | A+ | A+ | A+ |
| | Capacity | Rated | kW | 3.4 | 4.3 | 6.0 | 7.0 |
| | | Min-Max | kW | 1.3 - 4.2 | 1.1 - 5.0 | 1.5 - 7.2 | 1.6 - 8.0 |
| | Total Input | Rated | kW | 0.91 | 1.26 | 1.86 | 2.18 |
| Operating Current (Max) | | | A | 7.0 | 8.7 | 14.0 | 15.4 |
| Indoor Unit | Input | Rated | kW | 0.020 / 0.024 | 0.020 / 0.024 | 0.037 / 0.052 | 0.063 / 0.059 |
| | Operating Current(Max) | | A | 0.20 | 0.20 | 0.45 | 0.55 |
| | Dimensions | H*W*D | mm | 600-750-215 | 600-750-215 | 600-750-215 | 600-750-215 |
| | Weight | | kg | 14.5 | 14.5 | 14.5 | 15.0 |
| | Air Volume | Cooling | m3/min | 3.9 - 4.8 - 6.5 - 7.8 - 8.9 | 3.9 - 4.8 - 6.5 - 7.8 - 8.9 | 5.6 - 6.7 - 8.6 - 10.4 - 12.3 | 5.6 - 8.0 - 9.6 - 12.3 - 15.0 |
| | (SLo-Lo-Mid-Hi-SHi (*3)) | Heating | m3/min | 3.5 - 4.0 - 5.6 - 7.3 - 9.7 | 3.5 - 4.0 - 5.6 - 7.3 - 9.7 | 6.0 - 7.7 - 9.4 - 11.6 - 14.0 | 6.0 - 7.7 - 9.7 - 12.5 - 14.6 |
| | Sound Level (SPL) | Cooling | dB(A) | 19 - 24 - 31 - 37 - 41 | 19 - 24 - 31 - 37 - 41 | 28 - 32 - 37 - 42 - 48 | 28 - 36 - 40 - 46 - 53 |
| | (SLo-Lo-Mid-Hi-SHi (*3)) | Heating | dB(A) | 19 - 23 - 30 - 37 - 44 | 19 - 23 - 30 - 37 - 44 | 29 - 35 - 40 - 44 - 49 | 29 - 35 - 41 - 47 - 51 |
| | Sound Level (PWL) | Cooling | dB(A) | 54 | 54 | 60 | 65 |
| Outdoor Unit | Dimensions | H*W*D | mm | 550-800-285 | 550-800-285 | 714-800-285 | 880-840-300 |
| | Weight | | kg | 30 | 35 | 41 | 54 |
| | Air Volume | Cooling | m3/min | 36.3 | 34.3 | 45.8 | 50.1 |
| | | Heating | m3/min | 34.6 | 32.7 | 43.7 | 50.1 |
| | Sound Level (SPL) | Cooling | dB(A) | 45 | 48 | 48 | 49 |
| | | Heating | dB(A) | 46 | 48 | 49 | 51 |
| | Sound Level (PWL) | Cooling | dB(A) | 59 | 59 | 64 | 65 |
| | Operating Current(Max) | | A | 7 | 9 | 14 | 15 |
| | Breaker Size | | A | 10 | 10 | 16 | 16 |
| Ext. Piping | Diameter | Liquid/Gas | mm | 6.35 / 9.52 | 6.35 / 9.52 | 6.35 / 12.7 | 6.35 / 15.88 |
| | Max.Length | Out-In | m | 20 | 20 | 30 | 30 |
| | Max.Height | Out-In | m | 12 | 12 | 30 | 30 |
| Guaranteed Operating Range [Outdoor] | | Cooling | ℃ | -10 ~ +46 | -10 ~ +46 | -15 ~ +46 | -15 ~ +46 |
| | | Heating | ℃ | -10 ~ +24 | -10 ~ +24 | -10 ~ +24 | -10 ~ +24 |

(*1) Refrigerant leakage contributes to climate change. Refrigerant with lower global warming potential (GWP) would contribute less to global warming than a refrigerant with higher GWP, if leaked to the atmosphere. This appliance contains a refrigerant fluid with a GWP equal to 1975. This means that if 1 kg of this refrigerant fluid would be leaked to the atmosphere, the impact on global warming would be 1975 times higher than 1 kg of $CO_2$, over a period of 100 years. Never try to interfere with the refrigerant circuit yourself or disassemble the product yourself and always ask a professional.
The GWP of R410A is 2088 in the IPCC 4th Assessment Report.
(*2) Energy consumption based on standard test results. Actual energy consumption will depend on how the appliance is used and where it is located.
(*3) SHi: Super High
(*4) SEER, SCOP and other related description are based on COMMISSION DELEGATED REGULATION (EU) No.626/2011. The temperature conditions for calculating SCOP are based on "Average Season".

# MLZ SERIES

R32
R410A
Multi

Introducing a new type of ceiling cassette for the Multi-Split Series with streamed interior dimensions and a sharp, sleek appearance.

MLZ-KP25/35/50VF

GOOD DESIGN

reddot award 2018 winner

## Slim Design

Industry leading slim body realized a simple design with linear beauty.

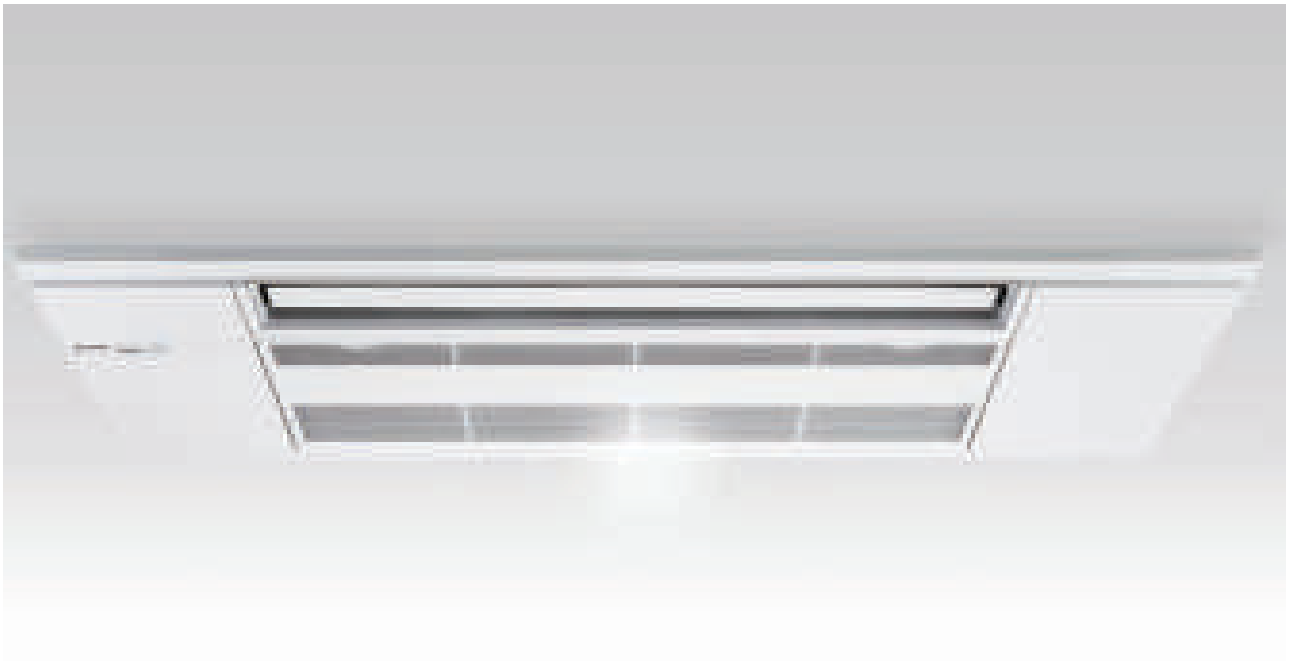

## Ceiling Mounted

Installing the ceiling-mounted MLZ Series unit in a room creates a more spacious feel that enhances room comfort. This overhead format is also an excellent solution when lighting equipment is installed at the centre of the room and fixtures such as book shelves are mounted on wall surfaces.

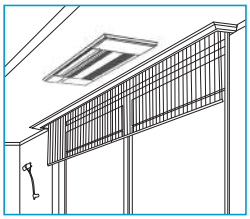

## Slim Body

The new units are designed with a slim body (only 185mm high), ensuring easy installation even when low ceiling cavities limit installation space. The need for ceiling cavity service space is also eliminated, further reducing the dimensions required for installation.

## Set Airflow According to Ceiling Height

Dual-level airflow selection is engineered to accommodate specific ceiling heights. This is a key feature for adjusting airflow effectively when it is either too strong or too weak due to being mismatched with the height of the ceiling.

| | 25 | 35 | 50 |
|---|---|---|---|
| Standard | 2.4m | 2.4m | 2.4m |
| High ceiling | 2.7m | 2.7m | 2.7m |

## Auto Vane Control

Outlet vanes can be moved left and right, and up and down using the remote controller. This improved airflow control feature solves the problem of drafts.

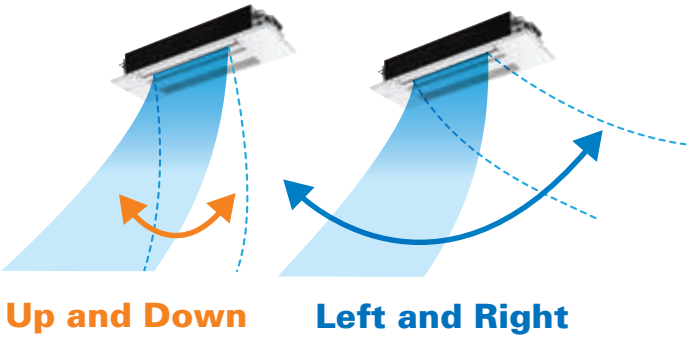


✻Only available when Econo Cool is set.

## Horizontal Airflow

The new airflow control completely eliminates that uncomfortable drafty-feeling with the introduction of a horizontal airflow that spreads across the ceiling. The ideal airflow for offices and restaurants.

[Horizontal Airflow]
Model name: MLZ-KP35VF
Ceiling height: 2.4m
Model: Cooling

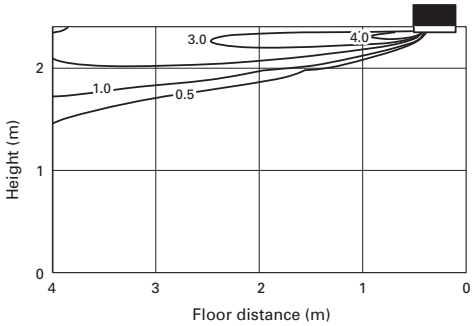


## Weekly Timer Built-in Weekly Timer Function

Easily set desired temperatures and operation ON/OFF times to match lifestyle patterns. Reduce wasted energy consumption by using the timer to prevent forgetting to turn off the unit and eliminate temperature setting adjustments.

**■ Example Operation Pattern (Winter/Heating mode)**

| | Mon. | Tues. | Wed. | Thurs. | Fri. | Sat. | Sun. |
|---|---|---|---|---|---|---|---|
| 6:00 | ON 20°C | ON 20°C | ON 20°C | ON 20°C | ON 20°C | ON 20°C | ON 20°C |
| 8:00 | Automatically changes to high-power operation at wake-up time | | | | | | |
| 10:00 | OFF | OFF | OFF | OFF | OFF | ON 18°C | ON 18°C |
| 12:00 | Automatically turned off during work hours | | | | | Midday is warmer, so the temperature is set lower | |
| 14:00 | | | | | | | |
| 16:00 | | | | | | | |
| 18:00 | ON 22°C | ON 22°C | ON 22°C | ON 22°C | ON 22°C | ON 22°C | ON 22°C |
| 20:00 | Automatically turns on, synchronized with arrival at home | | | | | Automatically raises temperature setting to match time when outside-air temperature is low | |
| 22:00 | | | | | | | |
| (during sleeping hours) | ON 18°C | ON 18°C | ON 18°C | ON 18°C | ON 18°C | ON 10°C | ON 10°C |
| | Automatically lowers temperature at bedtime for energy-saving operation at night | | | | | | |

**Settings**
**Pattern Settings:** Input up to four settings for each day
**Settings:** •Start/Stop operation •Temperature setting ✻The operation mode cannot be set.

### ■ Easy set-up using dedicated buttons

The remote controller is equipped with buttons that are used exclusively for setting the Weekly Timer. Setting operation patterns is easy and quick.

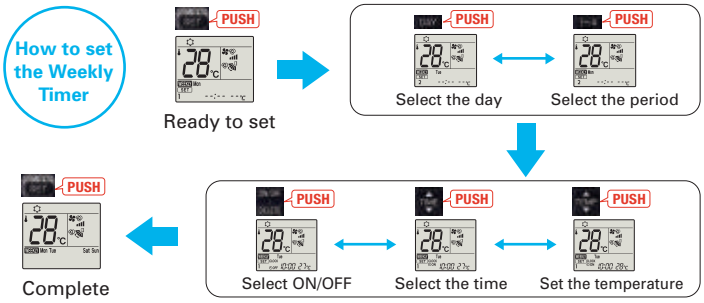


- Start by pushing the "SET" button and follow the instructions to set the desired patterns. Once all of the desired patterns are input, point the top end of the remote controller at the indoor unit and push the "SET" button one more time. (Push the "SET" button only after inputting all of the desired patterns into the remote controller memory. Pushing the "CANCEL" button will end the set-up process without sending the operation patterns to the indoor unit).
- It takes a few seconds to transmit the Weekly Timer operation patterns to the indoor unit. Please continue to point the remote controller at the indoor unit until all data has been sent.

# Easy Installation

## Industry leading Slim Body

Inovative size which enables to fold the refrigerant piping above the unit.

Dimension: 185(H)×1102(W)×360(D)mm

## Temporary hanging hook

Work efficiency has improved during installation.

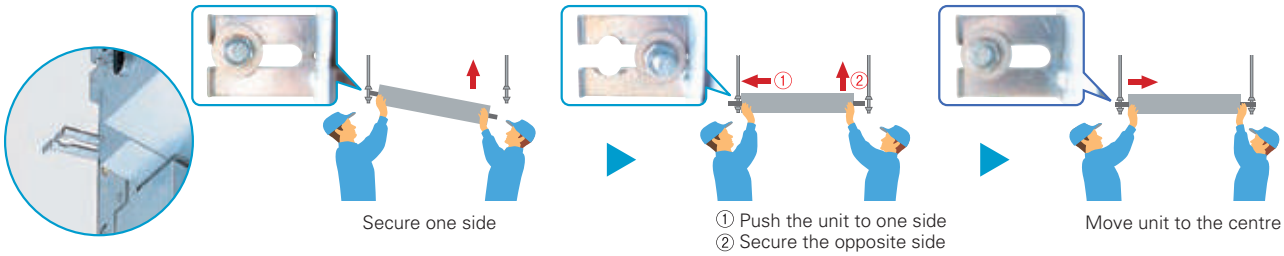


## Drain Piping Supporters + Drain Cover

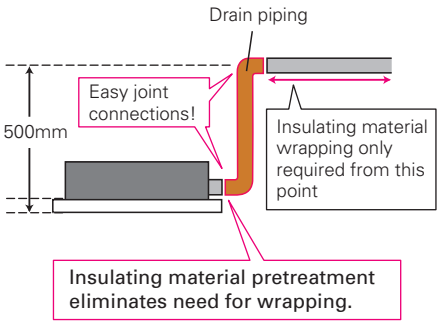


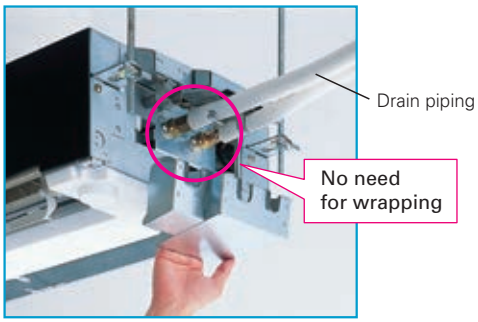


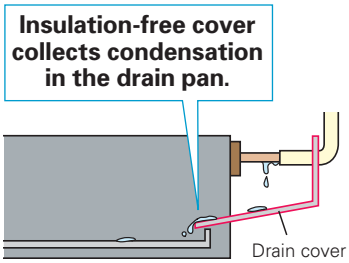


## Wi-Fi Interface Installation (Optional)

The indoor unit panel is equipped with a Wi-Fi Interface pocket, contributing to the beautiful appearance, easy installation, and maintenance.

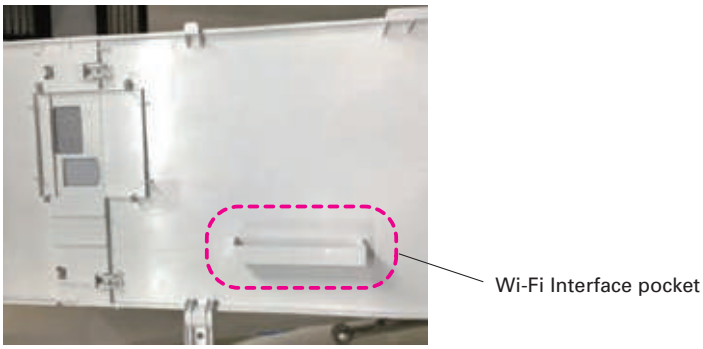

# MLZ-KP SERIES

DC Inverter

## Indoor Unit

R32

MLZ-KP25/35/50VF

GOOD DESIGN

reddot award 2018 winner

## Panel

MLP-444W

## Outdoor Unit

SUZ-M25/35VA

SUZ-M50VA

## Remote Controller

Enclosed in MLZ-KP

*optional

*optional

*optional

Econo Cool | AUTO VANE | Silver-ion | Air Purifying | SWING (Optional) | High Ceiling | AUTO | Weekly Timer | ACO | Auto Restart | (Optional) | Group Control (Optional) | M-NET connection (Optional) | Wi-Fi Interface (Optional) | MXZ connection

10°C | Night | Drain Lift Up | Flare connection | Self Diagnosis | Failure Recall

| Type | | | | Inverter Heat Pump | | |
|---|---|---|---|---|---|---|
| Indoor Unit | | | | MLZ-KP25VF | MLZ-KP35VF | MLZ-KP50VF |
| Outdoor Unit | | | | SUZ-M25VA | SUZ-M35VA | SUZ-M50VA |
| Refrigerant | | | | R32(*1) | | |
| Power Supply | Source | | | Outdoor Power supply | | |
| | Outdoor ( V / Phase / Hz ) | | | 230V / Single / 50Hz | | |
| Cooling | Design load | | kW | 2.5 | 3.5 | 5.0 |
| | Annual electricity consumption (*2) | | kWh/a | 141 | 175 | 260 |
| | SEER (*4) | | | 6.2 | 7.0 | 6.7 |
| | | Energy efficiency class | | A++ | A++ | A++ |
| | Capacity | Rated | kW | 2.5 | 3.5 | 5.0 |
| | | Min-Max | kW | 1.4 - 3.2 | 0.8 - 3.9 | 1.7 - 5.6 |
| | Total Input | Rated | kW | 0.59 | 0.94 | 1.38 |
| Heating (Average Season) | Design load | | kW | 2.2 | 2.6 | 4.3 |
| | Declared Capacity | at reference design temperature | kW | 2.0 (–10°C) | 2.3 (–10°C) | 3.8 (–10°C) |
| | | at bivalent temperature | kW | 2.0 (–7°C) | 2.3 (–7°C) | 3.8 (–7°C) |
| | | at operation limit temperature | kW | 2.0 (–10°C) | 2.3 (–10°C) | 3.8 (–10°C) |
| | Back up heating capacity | | kW | 0.2 | 0.3 | 0.5 |
| | Annual electricity consumption (*2) | | kWh/a | 697 | 791 | 1397 |
| | SCOP (*4) | | | 4.4 | 4.6 | 4.3 |
| | | Energy efficiency class | | A+ | A++ | A+ |
| | Capacity | Rated | kW | 3.2 | 4.1 | 6.0 |
| | | Min-Max | kW | 1.4 - 4.2 | 1.1 - 4.9 | 1.7 - 7.2 |
| | Total Input | Rated | kW | 0.80 | 1.10 | 1.86 |
| Operating Current (Max) | | | A | 7.2 | 8.9 | 13.9 |
| Indoor Unit | Input | Rated | kW | 0.04 | 0.04 | 0.04 |
| | Operating Current(Max) | | A | 0.40 | 0.40 | 0.40 |
| | Dimensions | H*W*D | mm | 185-1102-360 | 185-1102-360 | 185-1102-360 |
| | Weight | | kg | 15.5 | 15.5 | 15.5 |
| | Air Volume (SLo-Lo-Mid-Hi(*3))(Dry/Wet)) | Cooling | $m^3$/min | 6.0-7.2-8.0-8.8 | 6.0-7.3-8.4-9.4 | 6.0-8.3-9.8-11.4 |
| | | Heating | $m^3$/min | 6.0-7.0-8.2-9.2 | 6.0-7.7-8.8-9.9 | 6.0-8.8-10.3-11.8 |
| | Sound Level (SPL) (SLo-Lo-Mid-Hi(*3)) | Cooling | dB(A) | 27-31-34-38 | 27-32-36-40 | 29-36-41-47 |
| | | Heating | dB(A) | 26-27-34-37 | 29-32-36-40 | 26-37-42-48 |
| | Sound Level (PWL) | Cooling | dB(A) | 52 | 53 | 59 |
| Panel | Dimensions | H*W*D | mm | 24-1200-424 | 24-1200-424 | 24-1200-424 |
| | Weight | | kg | 3.5 | 3.5 | 3.5 |
| Outdoor Unit | Dimensions | H*W*D | mm | 550-800-285 | 550-800-285 | 550-800-285 |
| | Weight | | kg | 30 | 35 | 41 |
| | Air Volume | Cooling | $m^3$/min | 36.3 | 34.3 | 45.8 |
| | | Heating | $m^3$/min | 34.6 | 32.7 | 43.7 |
| | Sound Level (SPL) | Cooling | dB(A) | 45 | 48 | 48 |
| | | Heating | dB(A) | 46 | 48 | 49 |
| | Sound Level (PWL) | Cooling | dB(A) | 59 | 59 | 64 |
| | Operating Current (Max) | | A | 6.8 | 8.5 | 13.5 |
| | Breaker Size | | A | 10 | 10 | 20 |
| Ext. Piping | Diameter | Liquid/Gas | mm | 6.35/9.52 | 6.35/9.52 | 6.35/12.7 |
| | Max.Length | Out-In | m | 20 | 20 | 30 |
| | Max.Height | Out-In | m | 12 | 12 | 30 |
| Guaranteed Operating Range (Outdoor) | | Cooling | ℃ | –10~+46 | –10~+46 | –15~+46 |
| | | Heating | ℃ | –10~+24 | –10~+24 | –10~+24 |

(*1) Refrigerant leakage contributes to climate change. Refrigerant with lower global warming potential (GWP) would contribute less to global warming than a refrigerant with higher GWP, if leaked to the atmosphere. This appliance contains a refrigerant fluid with a GWP equal to 1975. This means that if 1 kg of this refrigerant fluid would be leaked to the atmosphere, the impact on global warming would be 1975 times higher than 1 kg of $CO_2$, over a period of 100 years. Never try to interfere with the refrigerant circuit yourself or disassemble the product yourself and always ask a professional.
The GWP of R410A is 2088 in the IPCC 4th Assessment Report.
(*2) Energy consumption based on standard test results. Actual energy consumption will depend on how the appliance is used and where it is located.
(*3) SHi: Super High
(*4) SEER, SCOP and other related description are based on COMMISSION DELEGATED REGULATION (EU) No.626/2011. The temperature conditions for calculating SCOP are based on "Average Season".

# Specification on Warmer/Colder Condition

| Type | | | | Inverter Heat Pump | | | | | | |
|---|---|---|---|---|---|---|---|---|---|---|
| Indoor Unit | | | | MSZ-LN25VG2 | | MSZ-LN35VG2 | | MSZ-LN50VG2 | | MSZ-LN60VG2 |
| Outdoor Unit | | | | MUZ-LN25VG2 | MUZ-LN25VGHZ2 | MUZ-LN35VG2 | MUZ-LN35VGHZ2 | MUZ-LN50VG2 | MUZ-LN50VGHZ | MUZ-LN60VG |
| Refrigerant | | | | R32 (*3) | | | | | | |
| Cooling | Design load | | kW | 2.5 | 2.5 | 3.5 | 3.5 | 5 | 5.0 | 6.1 |
| | Annual electricity consumption (*2) | | kWh/a | 83 | 83 | 129 | 130 | 205 | 230 | 285 |
| | SEER | | | 10.5 | 10.5 | 9.5 | 9.4 | 8.5 | 7.6 | 7.5 |
| | | Energy efficiency class | | $A^{+++}$ | $A^{+++}$ | $A^{+++}$ | $A^{+++}$ | $A^{+++}$ | $A^{++}$ | $A^{++}$ |
| Heating (Warmer Season) | Design load | | kW | 1.7 (2°C) | 1.8 (2ºC) | 2.0 (2°C) | 2.2 (2ºC) | 2.5 (2°C) | 3.3 (2ºC) | 3.3 (2°C) |
| | Declared Capacity | at reference design temperature | kW | 1.7 (2°C) | 1.8 (2ºC) | 2.0 (2°C) | 2.2 (2ºC) | 2.5 (2°C) | 3.3 (2ºC) | 3.3 (2°C) |
| | | at bivalent temperature | kW | 1.7 (2°C) | 1.8 (2ºC) | 2.0 (2°C) | 2.2 (2ºC) | 2.5 (2°C) | 3.3 (2ºC) | 3.3 (2°C) |
| | | at operation limit temperature | kW | 2.5 (–15°C) | 2.3 (-25ºC) | 3.2 (-15°C) | 3.1 (-25ºC) | 4.2 (-15°C) | 4.7 (-25ºC) | 6.0 (-15°C) |
| | Back up heating capacity | | kW | 0.0 (2°C) | 0.0 (2ºC) | 0.0 (2°C) | 0.0 (2ºC) | 0.0 (2°C) | 0.0(2ºC) | 0.0 (2°C) |
| | Annual electricity consumption (*2) | | kWh/a | 369 | 382 | 431 | 467 | 602 | 779 | 779 |
| | SCOP | | | 6.4 | 6.6 | 6.5 | 6.5 | 5.8 | 5.9 | 5.9 |
| | | Energy efficiency class | | $A^{+++}$ | $A^{+++}$ | $A^{+++}$ | $A^{+++}$ | $A^{+++}$ | $A^{+++}$ | $A^{+++}$ |
| Heating (Colder Season) | Design load | | kW | — | 4.7 (-22ºC) | — | 5.9 (-22ºC) | — | 8.8 (-22ºC) | — |
| | Declared Capacity | at reference design temperature | kW | — | 2.6 (-22ºC) | — | 3.4 (-22ºC) | — | 5.1 (-22ºC) | — |
| | | at bivalent temperature | kW | — | 3.2 (-10ºC) | — | 4.0 (-10ºC) | — | 6.0 (-10ºC) | — |
| | | at operation limit temperature | kW | — | 2.3 (-25ºC) | — | 3.1 (-25ºC) | — | 4.7 (-25ºC) | — |
| | Back up heating capacity | | kW | — | 2.1 (-22ºC) | — | 2.5 (-22ºC) | — | 3.7 (-22ºC) | — |
| | Annual electricity consumption (*2) | | kWh/a | — | 2425 | — | 3075 | — | 5340 | — |
| | SCOP | | | — | 4.0 | — | 4.0 | — | 3.4 | — |
| | | Energy efficiency class | | — | $A^{+}$ | — | $A^{+}$ | — | A | — |

| Type | | | | Inverter Heat Pump | | | | | | | | | | |
|---|---|---|---|---|---|---|---|---|---|---|---|---|---|---|
| Indoor Unit | | | | MSZ-AP20VG | MSZ-AP25VG | | MSZ-AP35VG | | MSZ-AP42VG | | MSZ-AP50VG | | MSZ-AP60VG(K) | MSZ-AP71VG(K) |
| Outdoor Unit | | | | MUZ-AP20VG | MUZ-AP25VG | MUZ-AP25VGH | MUZ-AP35VG | MUZ-AP35VGH | MUZ-AP42VG | MUZ-AP42VGH | MUZ-AP50VG | MUZ-AP50VGH | MUZ-AP60VG | MUZ-AP71VG |
| Refrigerant | | | | R32 (*3) | | | | | | | | | | |
| Cooling | Design load | | kW | 2.0 | 2.5 | 2.5 | 3.5 | 3.5 | 4.2 | 4.2 | 5.0 | 5.0 | 6.1 | 7.1 |
| | Annual electricity consumption (*2) | | kWh/a | 81 | 116 | 116 | 171 | 171 | 196 | 196 | 246 | 246 | 288 | 345 |
| | SEER | | | 8.6 | 7.6 | 7.6 | 7.2 | 7.2 | 7.5 | 7.5 | 7.2 | 7.2 | 7.4 | 7.2 |
| | | Energy efficiency class | | $A^{+++}$ | $A^{++}$ | $A^{++}$ | $A^{++}$ | $A^{++}$ | $A^{++}$ | $A^{++}$ | $A^{++}$ | $A^{++}$ | $A^{++}$ | $A^{++}$ |
| Heating (Warmer Season) | Design load | | kW | 1.3 (2ºC) | 1.3 (2°C) | 1.3 (2°C) | 1.6 (2°C) | 1.6 (2°C) | 2.1 (2°C) | 2.1 (2°C) | 2.3 (2°C) | 2.3 (2°C) | 2.5 (2ºC) | 3.7 (2ºC) |
| | Declared Capacity | at reference design temperature | kW | 1.3 (2ºC) | 1.3 (2°C) | 1.3 (2°C) | 1.6 (2°C) | 1.6 (2°C) | 2.1 (2°C) | 2.1 (2°C) | 2.3 (2°C) | 2.3 (2°C) | 2.5 (2ºC) | 3.7 (2ºC) |
| | | at bivalent temperature | kW | 1.3 (2ºC) | 1.3 (2°C) | 1.3 (2°C) | 1.6 (2°C) | 1.6 (2°C) | 2.1 (2°C) | 2.1 (2°C) | 2.3 (2°C) | 2.3 (2°C) | 2.5 (2ºC) | 3.7 (2ºC) |
| | | at operation limit temperature | kW | 2.2 (-15ºC) | 2.0 (-15°C) | 1.6 (-20°C) | 2.2 (-15°C) | 1.6 (-20°C) | 3.4 (-15°C) | 2.2 (-20°C) | 3.4 (-15°C) | 2.3 (-20°C) | 3.7 (-15ºC) | 5.4 (-15ºC) |
| | Back up heating capacity | | kW | 0.0 (2ºC) | 0.0 (2°C) | 0.0 (2°C) | 0.0 (2°C) | 0.0 (2°C) | 0.0 (2°C) | 0.0 (2°C) | 0.0 (2°C) | 0.0 (2°C) | 0.0 (2ºC) | 0.0 (2ºC) |
| | Annual electricity consumption (*2) | | kWh/a | 350 | 337 | 337 | 923 / 418 | 417 | 507 | 507 | 563 | 563 | 627 | 891 |
| | SCOP | | | 5.2 | 5.4 | 5.4 | 5.4 | 5.4 | 5.8 | 5.8 | 5.7 | 5.7 | 5.5 | 5.8 |
| | | Energy efficiency class | | $A^{+++}$ | $A^{+++}$ | $A^{+++}$ | $A^{+++}$ | $A^{+++}$ | $A^{+++}$ | $A^{+++}$ | $A^{+++}$ | $A^{+++}$ | $A^{+++}$ | $A^{+++}$ |

| Type | | | | Inverter Heat Pump | | | | | |
|---|---|---|---|---|---|---|---|---|---|
| Indoor Unit | | | | MSZ-FH25VE2 | | MSZ-FH35VE2 | | MSZ-FH50VE2 | |
| Outdoor Unit | | | | MUZ-FH25VE | MUZ-FH25VEHZ | MUZ-FH35VE | MUZ-FH35VEHZ | MUZ-FH50VE | MUZ-FH50VEHZ |
| Refrigerant | | | | R410A (*1) | | | | | |
| Cooling | Design load | | kW | 2.5 | 2.5 | 3.5 | 3.5 | 5.0 | 5.0 |
| | Annual electricity consumption (*2) | | kWh/a | 96 | 96 | 138 | 138 | 244 | 244 |
| | SEER | | | 9.1 | 9.1 | 8.9 | 8.9 | 7.2 | 7.2 |
| | | Energy efficiency class | | $A^{+++}$ | $A^{+++}$ | $A^{+++}$ | $A^{+++}$ | $A^{++}$ | $A^{++}$ |
| Heating (Warmer Season) | Design load | | kW | 1.7 (2°C) | 1.8 (2°C) | 2.0 (2°C) | 2.2 (2°C) | 2.5 (2°C) | 3.3 (2°C) |
| | Declared Capacity | at reference design temperature | kW | 1.7 (2°C) | 1.8 (2°C) | 2.0 (2°C) | 2.2 (2°C) | 2.5 (2°C) | 3.3 (2°C) |
| | | at bivalent temperature | kW | 1.7 (2°C) | 1.8 (2°C) | 2.0 (2°C) | 2.2 (2°C) | 2.5 (2°C) | 3.3 (2°C) |
| | | at operation limit temperature | kW | 2.5 (–15°C) | 1.7 (–25°C) | 3.2 (–15°C) | 2.6 (–25°C) | 5.2 (–15°C) | 3.8 (–25°C) |
| | Back up heating capacity | | kW | 0.0 (2°C) | 0.0 (2°C) | 0.0 (2°C) | 0.0 (2°C) | 0.0 (2°C) | 0.0 (2°C) |
| | Annual electricity consumption (*2) | | kWh/a | 376 | 397 | 429 | 471 | 614 | 787 |
| | SCOP | | | 6.3 | 6.3 | 6.5 | 4.8 / 6.5 | 5.7 | 5.9 |
| | | Energy efficiency class | | $A^{+++}$ | $A^{+++}$ | $A^{+++}$ | $A^{+++}$ | $A^{+++}$ | $A^{+++}$ |

| Type | | | | Inverter Heat Pump | | | | | |
|---|---|---|---|---|---|---|---|---|---|
| Indoor Unit | | | | MSZ-EF25VG | | MSZ-EF35VG | | MSZ-EF42VG | MSZ-EF50VG |
| Outdoor Unit | | | | MUZ-EF25VG | MUZ-EF25VGH | MUZ-EF35VG | MUZ-EF35VGH | MUZ-EF42VG | MUZ-EF50VG |
| Refrigerant | | | | R32 (*3) | | | | | |
| Cooling | Design load | | kW | 2.5 | 2.5 | 3.5 | 3.5 | 4.2 | 5.0 |
| | Annual electricity consumption (*2) | | kWh/a | 96 | 96 | 139 | 139 | 186 | 233 |
| | SEER | | | 9.1 | 9.1 | 8.8 | 8.8 | 7.9 | 7.5 |
| | | Energy efficiency class | | $A^{+++}$ | $A^{+++}$ | $A^{+++}$ | $A^{+++}$ | $A^{++}$ | $A^{++}$ |
| Heating (Warmer Season) | Design load | | kW | 1.3 (2ºC) | 1.3 (2ºC) | 1.6 (2ºC) | 1.6 (2ºC) | 2.1 (2ºC) | 2.3 (2ºC) |
| | Declared Capacity | at reference design temperature | kW | 1.3 (2ºC) | 1.3 (2ºC) | 1.6 (2ºC) | 1.6 (2ºC) | 2.1 (2ºC) | 2.3 (2ºC) |
| | | at bivalent temperature | kW | 1.3 (2ºC) | 1.3 (2ºC) | 1.6 (2ºC) | 1.6 (2ºC) | 2.1 (2ºC) | 2.3 (2ºC) |
| | | at operation limit temperature | kW | 2.0 (-15ºC) | 2.0 (-15ºC) | 2.4 (-15ºC) | 2.4 (-15ºC) | 3.4 (-15ºC) | 3.5 (-15ºC) |
| | Back up heating capacity | | kW | 0.0 (2ºC) | 0.0 (2ºC) | 0.0 (2ºC) | 0.0 (2ºC) | 0.0 (2ºC) | 0.0 (2ºC) |
| | Annual electricity consumption (*2) | | kWh/a | 311 | 311 | 398 | 398 | 489 | 595 |
| | SCOP | | | 5.9 | 5.9 | 5.6 | 5.6 | 6.0 | 5.4 |
| | | Energy efficiency class | | $A^{+++}$ | $A^{+++}$ | $A^{+++}$ | $A^{+++}$ | $A^{+++}$ | $A^{+++}$ |

| Type | | | | Inverter Heat Pump | | | | | | | |
|---|---|---|---|---|---|---|---|---|---|---|---|
| Indoor Unit | | | | MSZ-SF25VE3 | | MSZ-SF35VE3 | | MSZ-SF42VE3 | | MSZ-SF50VE3 | |
| Outdoor Unit | | | | MUZ-SF25VE | MUZ-SF25VEH | MUZ-SF35VE | MUZ-SF35VEH | MUZ-SF42VE | MUZ-SF42VEH | MUZ-SF50VE | MUZ-SF50VEH |
| Refrigerant | | | | R410A (*1) | | | | | | | |
| Cooling | Design load | | kW | 2.5 | 2.5 | 3.5 | 3.5 | 4.2 | 4.2 | 5.0 | 5.0 |
| | Annual electricity consumption (*2) | | kWh/a | 116 | 116 | 171 | 171 | 196 | 196 | 246 | 246 |
| | SEER | | | 7.6 | 7.6 | 7.2 | 7.2 | 7.5 | 7.5 | 7.2 | 7.2 |
| | | Energy efficiency class | | $A^{++}$ | $A^{++}$ | $A^{++}$ | $A^{++}$ | $A^{++}$ | $A^{++}$ | $A^{++}$ | $A^{++}$ |
| Heating (Warmer Season) | Design load | | kW | 1.3 (2°C) | 1.3 (2°C) | 1.6 (2°C) | 1.6 (2°C) | 2.1 (2°C) | 2.1 (2°C) | 2.3 (2°C) | 2.3 (2°C) |
| | Declared Capacity | at reference design temperature | kW | 1.3 (2°C) | 1.3 (2°C) | 1.6 (2°C) | 1.6 (2°C) | 2.1 (2°C) | 2.1 (2°C) | 2.3 (2°C) | 2.3 (2°C) |
| | | at bivalent temperature | kW | 1.3 (2°C) | 1.3 (2°C) | 1.6 (2°C) | 1.6 (2°C) | 2.1 (2°C) | 2.1 (2°C) | 2.3 (2°C) | 2.3 (2°C) |
| | | at operation limit temperature | kW | 2.0 (–15°C) | 1.6 (–20°C) | 2.2 (–15°C) | 1.6 (–20°C) | 3.4 (–15°C) | 2.2 (–20°C) | 3.4 (–15°C) | 2.3 (–20°C) |
| | Back up heating capacity | | kW | 0.0 (2°C) | 0.0 (2°C) | 0.0 (2°C) | 0.0 (2°C) | 0.0 (2°C) | 0.0 (2°C) | 0.0 (2°C) | 0.0 (2°C) |
| | Annual electricity consumption (*2) | | kWh/a | 337 | 337 | 923 / 418 | 417 | 507 | 507 | 563 | 563 |
| | SCOP | | | 5.4 | 5.4 | 5.4 | 5.4 | 5.8 | 5.8 | 5.7 | 5.7 |
| | | Energy efficiency class | | $A^{+++}$ | $A^{+++}$ | $A^{+++}$ | $A^{+++}$ | $A^{+++}$ | $A^{+++}$ | $A^{+++}$ | $A^{+++}$ |

| Type | | | | Inverter Heat Pump | | | |
|---|---|---|---|---|---|---|---|
| Indoor Unit | | | | MSZ-BT20VG | MSZ-BT25VG | MSZ-BT35VG | MSZ-BT50VG |
| Outdoor Unit | | | | MUZ-BT20VG | MUZ-BT25VG | MUZ-BT35VG | MUZ-BT50VG |
| Refrigerant | | | | R32 (*3) | | | |
| Cooling | Design load | | kW | 2.0 | 2.5 | 3.5 | 5.0 |
| | Annual electricity consumption (*2) | | kWh/a | 86 | 108 | 180 | 265 |
| | SEER | | | 8.1 | 8.1 | 6.8 | 6.6 |
| | | Energy efficiency class | | $A^{++}$ | $A^{++}$ | $A^{++}$ | $A^{++}$ |
| Heating (Warmer Season) | Design load | | kW | 0.9 (2ºC) | 1.1 (2ºC) | 1.3 (2ºC) | 2.1 (2ºC) |
| | Declared Capacity | At reference design temperature | kW | 0.9 (2ºC) | 1.1 (2ºC) | 1.3 (2ºC) | 2.1 (2ºC) |
| | | at bivalent temperature | kW | 0.9(2ºC) | 1.1 (2ºC) | 1.3 (2ºC) | 2.1 (2ºC) |
| | | at operation limit temperature | kW | 1.3 (-15ºC) | 1.7 (-15ºC) | 2.1 (-15ºC) | 3.4 (-15ºC) |
| | Back up heating capacity | | kW | 0.0 (2ºC) | 0.0 (2ºC) | 0.0 (2ºC) | 0.0 (2ºC) |
| | Annual electricity consumption (*2) | | kWh/a | 234 | 268 | 304 | 543 |
| | SCOP (*4) | | | 5.3 | 5.7 | 5.9 | 5.4 |
| | | Energy efficiency class | | $A^{+++}$ | $A^{+++}$ | $A^{+++}$ | $A^{+++}$ |

| Type | | | | Inverter Heat Pump | | | |
|---|---|---|---|---|---|---|---|
| Indoor Unit | | | | MSZ-GF60VE2 | MSZ-GF71VE2 | MSZ-WN25VA | MSZ-WN35VA |
| Outdoor Unit | | | | MUZ-GF60VE | MUZ-GF71VE | MUZ-WN25VA | MUZ-WN35VA |
| Refrigerant | | | | R410A (*1) | | | |
| Cooling | Design load | | kW | 6.1 | 7.1 | 2.5 | 3.1 |
| | Annual electricity consumption (*2) | | kWh/a | 311 | 364 | 141 | 173 |
| | SEER | | | 6.8 | 6.8 | 6.2 | 6.2 |
| | | Energy efficiency class | | $A^{++}$ | $A^{++}$ | $A^{++}$ | $A^{++}$ |
| Heating (Warmer Season) | Design load | | kW | 2.5 (2°C) | 3.7 (2°C) | 1.1 (2°C) | 1.3 (2°C) |
| | Declared Capacity | At reference design temperature | kW | 2.5 (2°C) | 3.7 (2°C) | 1.1 (2°C) | 1.3 (2°C) |
| | | at bivalent temperature | kW | 2.5 (2°C) | 3.7 (2°C) | 1.1 (2°C) | 1.3 (2°C) |
| | | at operation limit temperature | kW | 3.7 (−15°C) | 5.4 (−15°C) | 1.6 (−15°C) | 2.0 (−15°C) |
| | Back up heating capacity | | kW | 0.0 (2°C) | 0.0 (2°C) | 0.0 (2°C) | 0.0 (2°C) |
| | Annual electricity consumption (*2) | | kWh/a | 664 | 963 | 304 | 362 |
| | SCOP (*4) | | | 5.3 | 5.4 | 5.0 | 5.0 |
| | | Energy efficiency class | | $A^{+++}$ | $A^{+++}$ | $A^{++}$ | $A^{++}$ |

| Type | | | | Inverter Heat Pump | | | | | | |
|---|---|---|---|---|---|---|---|---|---|---|
| Indoor Unit | | | | MSZ-HJ25VA | MSZ-HJ35VA | MSZ-HJ50VA | MSZ-HJ60VA | MSZ-HJ71VA | MSZ-DM25VA | MSZ-DM35VA |
| Outdoor Unit | | | | MUZ-HJ25VA | MUZ-HJ35VA | MUZ-HJ50VA | MUZ-HJ60VA | MUZ-HJ71VA | MUZ-DM25VA | MUZ-DM35VA |
| Refrigerant | | | | R410A (*1) | | | | | | |
| Cooling | Design load | | kW | 2.5 | 3.1 | 5.0 | 6.1 | 7.1 | 2.5 | 3.1 |
| | Annual electricity consumption (*2) | | kWh/a | 171 | 212 | 292 | 354 | 441 | 149 | 190 |
| | SEER | | | 5.1 | 5.1 | 6.0 | 6.0 | 5.6 | 5.8 | 5.7 |
| | | Energy efficiency class | | A | A | $A^{+}$ | $A^{+}$ | $A^{+}$ | $A^{+}$ | $A^{+}$ |
| Heating (Warmer Season) | Design load | | kW | 1.1 (2°C) | 1.3 (2°C) | 2.1 (2°C) | 2.5 (2°C) | 2.9 (2°C) | 1.1 (2°C) | 1.3 (2°C) |
| | Declared Capacity | at reference design temperature | kW | 1.1 (2°C) | 1.3 (2°C) | 2.1 (2°C) | 2.5 (2°C) | 2.9 (2°C) | 1.1 (2°C) | 1.3 (2°C) |
| | | at bivalent temperature | kW | 1.1 (2°C) | 1.3 (2°C) | 2.1 (2°C) | 2.5 (2°C) | 2.9 (2°C) | 1.1 (2°C) | 1.3 (2°C) |
| | | at operation limit temperature | kW | 1.9 (−10°C) | 2.4 (−10°C) | 3.8 (−10°C) | 4.6 (−10°C) | 5.4 (−10°C) | 1.9 (−10°C) | 2.4 (−10°C) |
| | Back up heating capacity | | kW | 0.0 (2°C) | 0.0 (2°C) | 0.0 (2°C) | 0.0 (2°C) | 0.0 (2°C) | 0.0 (2°C) | 0.0 (2°C) |
| | Annual electricity consumption (*2) | | kWh/a | 356 | 426 | 539 | 674 | 813 | 325 | 386 |
| | SCOP | | | 4.3 | 4.3 | 5.5 | 5.1 | 4.9 | 4.7 | 4.7 |
| | | Energy efficiency class | | $A^{+}$ | $A^{+}$ | $A^{+++}$ | $A^{+++}$ | $A^{++}$ | $A^{++}$ | $A^{++}$ |

| Type | | | | Inverter Heat Pump | | | | | |
|---|---|---|---|---|---|---|---|---|---|
| Indoor Unit | | | | MSZ-HR25VF | MSZ-HR35VF | MSZ-HR42VF | MSZ-HR50VF | MSZ-HR60VF | MSZ-HR71VF |
| Outdoor Unit | | | | MUZ-HR25VF | MUZ-HR35VF | MUZ-HR42VF | MUZ-HR50VF | MUZ-HR60VF | MUZ-HR71VF |
| Refrigerant | | | | R32 (*3) | | | | | |
| Cooling | Design load | | kW | 2.5 | 3.4 | 4.2 | 5.0 | 6.1 | 7.1 |
| | Annual electricity consumption (*2) | | kWh/a | 141 | 191 | 226 | 269 | 296 | 355 |
| | SEER | | | 6.2 | 6.2 | 6.5 | 6.5 | 7.2 | 7.0 |
| | | Energy efficiency class | | $A^{++}$ | $A^{++}$ | $A^{++}$ | $A^{++}$ | $A^{++}$ | $A^{++}$ |
| Heating (Warmer Season) | Design load | | kW | 1.1 (2ºC) | 1.3 (2ºC) | 1.6 (2ºC) | 2.1 (2ºC) | 2.5 (2ºC) | 3.0 (2ºC) |
| | Declared Capacity | at reference design temperature | kW | 1.1 (2ºC) | 1.3 (2ºC) | 1.6 (2ºC) | 2.1 (2ºC) | 2.5 (2ºC) | 3.0 (2ºC) |
| | | at bivalent temperature | kW | 1.1 (2ºC) | 1.3 (2ºC) | 1.6 (2ºC) | 2.1 (2ºC) | 2.5 (2ºC) | 3.0 (2ºC) |
| | | at operation limit temperature | kW | 1.9 (-10ºC) | 2.4 (-10ºC) | 2.9 (-10ºC) | 3.8 (-10ºC) | 4.6 (-10ºC) | 5.4 (-10ºC) |
| | Back up heating capacity | | kW | 0.0 (2ºC) | 0.0 (2ºC) | 0.0 (2ºC) | 0.0 (2ºC) | 0.0 (2ºC) | 0.0 (2ºC) |
| | Annual electricity consumption (*2) | | kWh/a | 289 | 344 | 427 | 558 | 640 | 802 |
| | SCOP | | | 5.3 | 5.2 | 5.2 | 5.2 | 5.4 | 5.2 |
| | | Energy efficiency class | | $A^{+++}$ | $A^{+++}$ | $A^{+++}$ | $A^{+++}$ | $A^{+++}$ | $A^{+++}$ |

(*1) Refrigerant leakage contributes to climate change. Refrigerant with lower global warming potential (GWP) would contribute less to global warming than a refrigerant with higher GWP, if leaked to the atmosphere. This appliance contains a refrigerant fluid with a GWP equal to 1975. This means that if 1 kg of this refrigerant fluid would be leaked to the atmosphere, the impact on global warming would be 1975 times higher than 1 kg of $CO_2$, over a period of 100 years. Never try to interfere with the refrigerant circuit yourself or disassemble the product yourself and always ask a professional.

(*2) Energy consumption based on standard test results. Actual energy consumption will depend on how the appliance is used and where it is located.

(*3) Refrigerant leakage contributes to climate change. Refrigerant with lower global warming potential (GWP) would contribute less to global warming than a refrigerant with higher GWP, if leaked to the atmosphere. This appliance contains a refrigerant fluid with a GWP equal to 550. This means that if 1 kg of this refrigerant fluid would be leaked to the atmosphere, the impact on global warming would be 550 times higher than 1 kg of $CO_2$, over a period of 100 years. Never try to interfere with the refrigerant circuit yourself or disassemble the product yourself and always ask a professional.

# S

SERIES

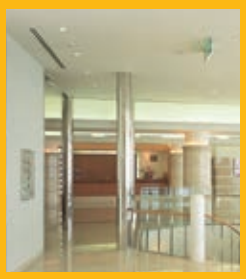

# SELECTION

Series line-up consists of two types of indoor units.
Choose the model that best matches room conditions.

## SELECT INDOOR UNIT

Select the optimal unit and capacity required to match room construction and air conditioning requirements.

R32
R410A

### Units without Remote Controller

SLZ-M15FA (Multi split series connection only)
SLZ-M25FA
SLZ-M35FA
SLZ-M50FA
SLZ-M60FA

### Panel

| Panel | With Signal Receiver | With 3D i-see Sensor | With Wireless Remote Controller |
|---|---|---|---|
| SLP-2FA | | | |
| SLP-2FAL | ✓ | | |
| SLP-2FAE | | ✓ | |
| SLP-2FALE | ✓ | ✓ | |
| SLP-2FALM | ✓ | | ✓ |
| SLP-2FALME | ✓ | ✓ | ✓ |

R32
R410A

### Units without Remote Controller

SEZ-M25DA
SEZ-M35DA
SEZ-M50DA
SEZ-M60DA
SEZ-M71DA

### Units with Wireless Remote Controller

SEZ-M25DAL
SEZ-M35DAL
SEZ-M50DAL
SEZ-M60DAL
SEZ-M71DAL

## SELECT OUTDOOR UNIT

There is one outdoor unit for respective indoor units.

R32

SUZ-M25/35VA

R32

SUZ-M50VA

R32

SUZ-M60/71VA

R410A

SUZ-KA25/35VA6

R410A

SUZ-KA50/60/71VA6

✻ To confirm compatibility with the MXZ Series multi-type system, refer to the MXZ Series page.

# SLZ SERIES

R32
R410A

SLZ-M15/25/35/50/60FA

GOOD DESIGN

Compact, lightweight ceiling cassette units with 4-way air outlets provide maximum comfort by evenly distributing airflow throughout the entire room.

## New lineup

1.5kW has been introduced for multi connection. The diverse selection enables the best solution for both customer and location.

| Capacity | 15 | 25 | 35 | 50 | 60 |
|---|---|---|---|---|---|
| SLZ-KF | | ✓ | ✓ | ✓ | ✓ |
| SLZ-M | ✓ | ✓ | ✓ | ✓ | ✓ |

## Beautiful design

The straight-line form introduced has resulted in a beautiful square design. Its high affinity ensures the ability to blend in seamlessly with any interior. The indoor unit is an ideal match for office or store use.
Of course, design matched 2×2 (600mm*600mm) ceiling construction specifications.

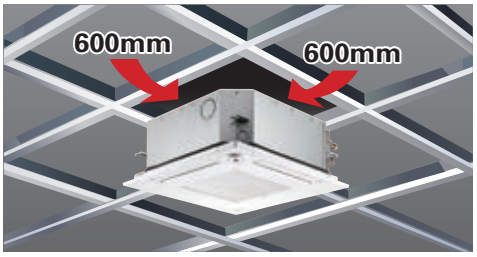


## The height above ceiling of 245mm

The height above ceiling of 245mm enables fitting into narrow ceiling space. Installation is simple, even when the ceiling spaces are narrow to make the ceilings higher.
Of course, in addition to our products, replacing competitors' product is simplified too.

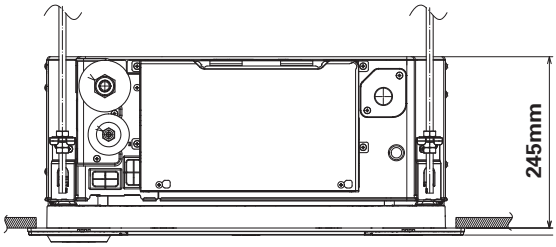


## Energy-saving Performance*

The energy-saving performance achieved A++ in SEER and A+ in SCOP.
*In case of connecting with SUZ-KA-VA6

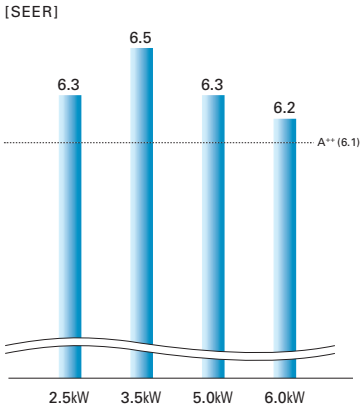


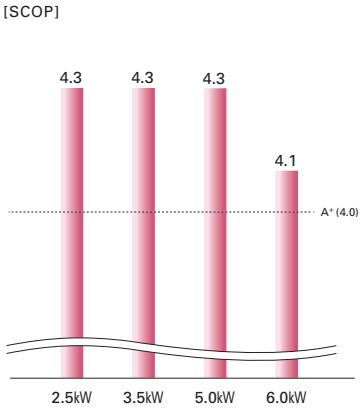

## Quietness

Low sound level has been realized by introduction of 3D turbo fan. New SLZ can give users quieter and move comfortable room condition.

## Horizontal Airflow

The new airflow control completely eliminates that uncomfortable drafty-feeling with the introduction of a horizontal airflow that spreads across the ceiling. The ideal airflow for offices and restaurants.

[Airflow distribution]*
SLZ-M60FA
Flow angle,cooling at 20°C (ceiling height 2.7m)

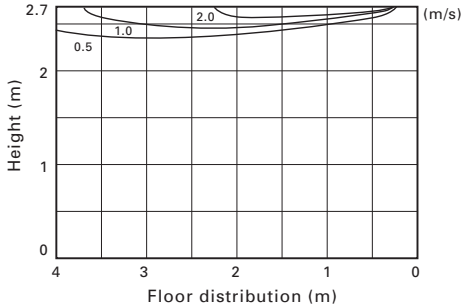


*Vane angle: Horizontal

## Easy installation

### Temporary hanging hook

The structure of the panel has been revised and is now equipped with a temporary hanging hook. This has improved work efficiency during temporary panel installation.

### No need to remove screws

Installation is possible without removing the screws for control box simply loosen them. This eliminates the risk of losing screws.

■ Corner panel

■ Control box cover

## Drain lift

As the result of using a larger drain pan, the maximum drain lifting height has been up to 850mm, greatly enhancing construction flexibility compared to the existing model.

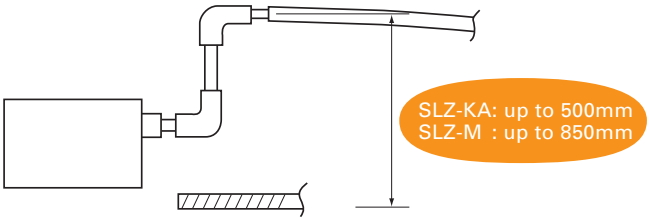

# 3D i-see Sensor for S & P SERIES

## Detects number of people

### Room occupancy energy-saving mode

The 3D i-see Sensor detects the number of people in the room. It then calculates the occupancy rate based on the maximum number of people in the room up to that point in time in order to save air-conditioning power. When the occupancy rate is approximately 30%, air-conditioning power equivalent to 1°C during both cooling and heating operation is saved. The temperature is controlled according to the number of people.

### No occupancy energy-saving mode

When 3D i-see Sensor detects that no one is in the room, the system is switched to a pre-set power-saving mode. If the room remains unoccupied for more than 60min, air-conditioning power equivalent to 2°C during both cooling and heating operation is saved. This contributes to preventing waste in terms of heating and cooling.

### No occupancy Auto-OFF mode*

When the room remains unoccupied for a pre-set period of time, the air conditioner turns off automatically, thereby providing even greater power savings. The time until operation is stopped can be set in intervals of 10min, ranging from 60 to 180 min.

* When MA Remote Controller is used to control multiple refrigerant systems, "No occupancy Auto-OFF mode" cannot be used.

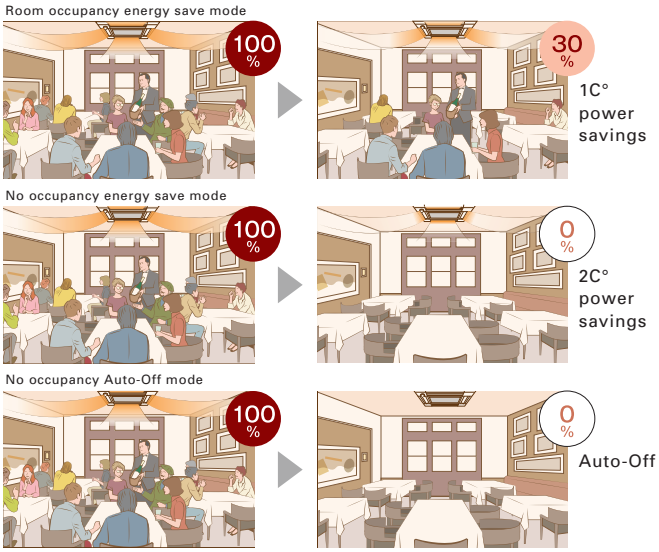


*PAR-40MAA is required for each setting

## Detects people's position

### Direct/Indirect settings*

Some people do not like the feel of wind, some want to be warm from head to toe. People's likes and dislikes vary. With the 3D i-see Sensor, it is possible to choose to block or not block to the wind for each vane.

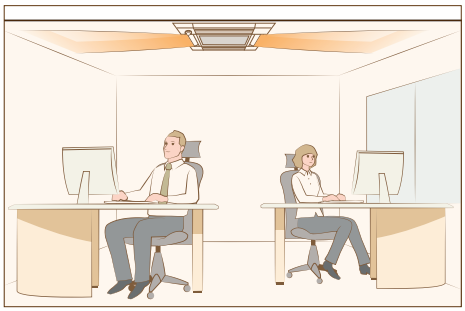

*PAR-40MAA or PAR-SL100A-E is required for each setting.

### Seasonal airflow*

**<When cooling>**
Saves energy while keeping a comfortable effective temperature by automatically switching between ventilation and cooling. When a pre-set temperature is reached, the air conditioning unit switches to swing fan operation to maintain the effective temperature. This clever function contributes to keeping a comfortable coolness.

**<When heating>**
The air conditioning unit automatically switches between circulator and heating. Wasted heat that accumulates near the ceiling is reused via circulation. When a pre-set temperature is reached the air conditioner switches from heating to circulator and blows air in the horizontal direction. It pushes down the warm air that has gathered near the ceiling to people's height, thereby providing smart heating.

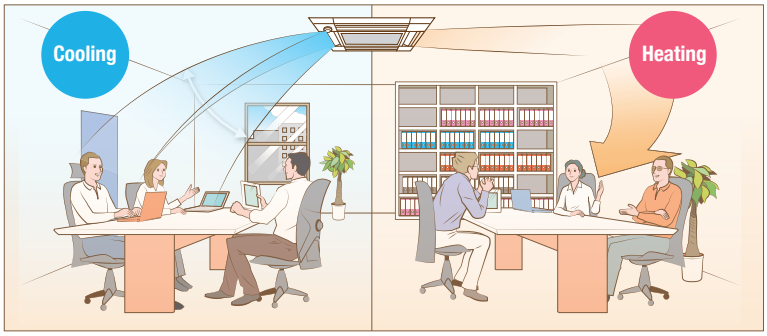


*PAR-40MAA is required for each setting.

## Simultaneous Multi-system*

Multiple indoor units can be installed to match the room layout, ensuring comfort and coverage of the entire room. Connection of multiple cassettes to P Series power inverter outdoor units shown below is possible.

* Only for RA410A connection

| Power Inverter Combination | | SLZ-M35FA | SLZ-M50FA | SLZ-M60FA |
|---|---|---|---|---|
| PUZ-ZM71VHA<br>PUHZ-ZRP71VHA2 | | Twin | — | — |
| | Distribution pipe | MSDD-50TR2-E<br>MSDD-50TR-E | | |
| PUZ-ZM100V(Y)KA<br>PUHZ-ZRP100V(Y)KA3 | | Triple | Twin | — |
| | Distribution pipe | MSDT-111R3-E<br>MSDT-111R-E | MSDD-50TR2-E<br>MSDD-50TR-E | |
| PUZ-ZM125V(Y)KA<br>PUHZ-ZRP125V(Y)KA3 | | Quadruple | Triple | Twin |
| | Distribution pipe | MSDF-1111R2-E<br>MSDF-1111R-E | MSDT-111R3-E<br>MSDT-111R-E | MSDD-50TR2-E2<br>MSDD-50TR-E |
| PUZ-ZM140V(Y)KA<br>PUHZ-ZRP140V(Y)KA3 | | Quadruple | Triple | — |
| | Distribution pipe | MSDF-1111R2-E<br>MSDF-1111R-E | MSDT-111R3-E<br>MSDT-111R-E | — |

# SLZ-M SERIES

DC Inverter | Joint Lap | Rare Earth Magnet | DC Fan Motor | PAM | Grooved Piping | Heat Caulking Fixing Method

## Indoor Unit

R32
R410A

GOOD DESIGN

SLZ-M15/25/35/50/60FA

## Outdoor Unit

R32

SUZ-M25/35VA

R32

SUZ-M50VA

R32

SUZ-M60VA

## Panel

| Panel | With Signal Receiver | With 3D i-see Sensor | With Wireless Remote Controller |
|---|---|---|---|
| SLP-2FA | | | |
| SLP-2FAL | ✓ | | |
| SLP-2FAE | | ✓ | |
| SLP-2FALE | ✓ | ✓ | |
| SLP-2FALM | ✓ | | ✓ |
| SLP-2FALME | ✓ | ✓ | ✓ |

## Remote Controller

Enclosed in SLP-2FALM/SLP-2FALME

*optional

*optional

*optional

Pure White | AUTO VANE | Fresh-air Intake | Long Life | FA Check! | SWING | ACO | Auto Restart | Low Temp Cooling | Optional | Group Control Optional | M-NET connection Optional | Wi-Fi Interface Optional | MXZ connection | Drain Lift Up | Flare connection | Self Diagnosis | Failure Recall

| Type | | | | Inverter Heat Pump | | | | |
|---|---|---|---|---|---|---|---|---|
| Indoor Unit | | | | SLZ-M15FA | SLZ-M25FA | SLZ-M35FA | SLZ-M50FA | SLZ-M60FA |
| Outdoor Unit | | | | for Multi connection | SUZ-M25VA | SUZ-M35VA | SUZ-M50VA | SUZ-M60VA |
| Refrigerant | | | | R32*1 | | | | |
| Power Supply | Source | | | Outdoor power supply | | | | |
| | Outdoor (V/Phase/Hz) | | | 230 / Single / 50 | | | | |
| Cooling | Capacity | Rated | kW | – | 2.5 | 3.5 | 4.6 | 5.7 |
| | | Min - Max | kW | – | 1.4 - 3.2 | 0.7 - 3.9 | 1.0 - 5.2 | 1.5 - 6.3 |
| | Total Input | Rated | kW | – | 0.65 | 1.09 | 1.35 | 1.67 |
| | Design Load | | kW | – | 2.5 | 3.5 | 4.6 | 5.7 |
| | Annual Electricity Consumption*2 | | kWh/a | – | 139 | 183 | 253 | 321 |
| | SEER | | | – | 6.3 | 6.7 | 6.3 | 6.2 |
| | | Energy Efficiency Class | | – | A++ | A++ | A++ | A++ |
| Heating (Average Season) | Capacity | Rated | kW | – | 3.2 | 4.0 | 5.0 | 6.4 |
| | | Min - Max | kW | – | 1.3 - 4.2 | 1.0 - 5.0 | 1.3 - 5.5 | 1.6 - 7.3 |
| | Total Input | Rated | kW | – | 0.88 | 1.07 | 1.56 | 2.13 |
| | Design Load | | kW | – | 2.2 | 2.6 | 3.6 | 4.6 |
| | Declared Capacity | at reference design temperature | kW | – | 2.0 (–10°C) | 2.3 (–10°C) | 3.2 (–10°C) | 4.1 (–10°C) |
| | | at bivalent temperature | kW | – | 2.0 (–7°C) | 2.3 (–7°C) | 3.2 (–7°C) | 4.1 (–7°C) |
| | | at operation limit temperature | kW | – | 2.0 (–10°C) | 2.3 (–10°C) | 3.2 (–10°C) | 4.1 (–10°C) |
| | Back Up Heating Capacity | | kW | – | 0.2 | 0.3 | 0.4 | 0.5 |
| | Annual Electricity Consumption*2 | | kWh/a | – | 716 | 843 | 1191 | 1559 |
| | SCOP | | | – | 4.3 | 4.3 | 4.2 | 4.1 |
| | | Energy Efficiency Class | | – | A+ | A+ | A+ | A+ |
| Operating Current (max) | | | A | – | 7.0 | 8.7 | 13.7 | 15.1 |
| Indoor Unit | Input | Rated | kW | 0.02 | 0.02 | 0.02 | 0.03 | 0.04 |
| | Operating Current (max) | | A | 0.17 | 0.20 | 0.24 | 0.32 | 0.43 |
| | Dimensions <Panel> | H × W × D | mm | 245-570-570 <10-625-625> | 245-570-570 <10-625-625> | 245-570-570 <10-625-625> | 245-570-570 <10-625-625> | 245-570-570 <10-625-625> |
| | Weight <Panel> | | kg | 15 <3> | 15 <3> | 15 <3> | 15 <3> | 15 <3> |
| | Air Volume [Lo-Mid-Hi] | | $m^3$/min | 6.0 - 6.5 - 7.0 | 6.5 - 7.5 - 8.5 | 6.5 - 8.0 - 9.5 | 7.0 - 9.0 - 11.5 | 7.5 - 11.5 - 13.0 |
| | Sound Level (SPL) [Lo-Mid-Hi] | | dB(A) | 24 - 26 - 28 | 25 - 28 - 31 | 25 - 30 - 34 | 27 - 34 - 39 | 32 - 40 - 43 |
| | Sound Level (PWL) | | dB(A) | 45 | 48 | 51 | 56 | 60 |
| Outdoor Unit | Dimensions | H × W × D | mm | – | 550 - 800 - 285 | 550 - 800 - 285 | 714 - 800 - 285 | 880 - 840 - 330 |
| | Weight | | kg | – | 30 | 35 | 41 | 54 |
| | Air Volume | Cooling | $m^3$/min | – | 36.3 | 34.3 | 45.8 | 50.1 |
| | | Heating | $m^3$/min | – | 34.6 | 32.7 | 43.7 | 50.1 |
| | Sound Level (SPL) | Cooling | dB(A) | – | 45 | 48 | 48 | 49 |
| | | Heating | dB(A) | – | 46 | 48 | 49 | 51 |
| | Sound Level (PWL) | Cooling | dB(A) | – | 59 | 59 | 64 | 65 |
| | Operating Current (max) | | A | – | 6.8 | 8.5 | 13.5 | 14.8 |
| | Breaker Size | | A | – | 10 | 10 | 20 | 20 |
| Ext. Piping | Diameter | Liquid / Gas | mm | – | 6.35 / 9.52 | 6.35 / 9.52 | 6.35 / 12.7 | 6.35 / 15.88 |
| | Max. Length | Out-In | m | – | 20 | 20 | 30 | 30 |
| | Max. Height | Out-In | m | – | 12 | 12 | 30 | 30 |
| Guaranteed Operating Range [Outdoor] | | Cooling | °C | – | –10~+46 | –10~+46 | –15~+46 | –15~+46 |
| | | Heating | °C | – | –10~+24 | –10~+24 | –10~+24 | –10~+24 |

*1 Refrigerant leakage contributes to climate change. Refrigerant with lower global warming potential (GWP) would contribute less to global warming than a refrigerant with higher GWP, if leaked to the atmosphere. This appliance contains a refrigerant fluid with a GWP equal to 1975. This means that if 1 kg of this refrigerant fluid would be leaked to the atmosphere, the impact on global warming would be 1975 times higher than 1 kg of $CO_2$, over a period of 100 years. Never try to interfere with the refrigerant circuit yourself or disassemble the product yourself and always ask a professional.
The GWP of R410A is 2088 in the IPCC 4th Assessment Report.

*2 Energy consumption based on standard test results. Actual energy consumption will depend on how the appliance is used and where it is located.

# SLZ-M SERIES

DC Inverter | Joint Lap | Rare Earth Magnet | DC Fan Motor | PAM | Grooved Piping | Heat Caulking Fixing Method

## Indoor Unit

R32
R410A

GOOD DESIGN

SLZ-M15/25/35/50/60FA

## Panel

| Panel | With Signal Receiver | With 3D i-see Sensor | With Wireless Remote Controller |
|---|---|---|---|
| SLP-2FA | | | |
| SLP-2FAL | ✓ | | |
| SLP-2FAE | | ✓ | |
| SLP-2FALE | ✓ | ✓ | |
| SLP-2FALM | ✓ | | ✓ |
| SLP-2FALME | ✓ | ✓ | ✓ |

## Outdoor Unit

R410A

SUZ-KA25/35VA6

R410A

SUZ-KA50/60VA6

## Remote Controller

Enclosed in SLP-2FALM/SLP-2FALME

*optional

*optional

*optional

Pure White | AUTO VANE | Fresh-air Intake | Long Life | FA Check! | SWING | ACO | Auto Restart | Low Temp Cooling | Optional | Group Control Optional | M-NET connection Optional | Wi-Fi Interface Optional | MXZ connection | Drain Lift Up | Flare connection | Self Diagnosis | Failure Recall

| Type | | | | Inverter Heat Pump | | | | |
|---|---|---|---|---|---|---|---|---|
| Indoor Unit | | | | SLZ-M15FA | SLZ-M25FA | SLZ-M35FA | SLZ-M50FA | SLZ-M60FA |
| Outdoor Unit | | | | for Multi connection | SUZ-KA25VA6 | SUZ-KA35VA6 | SUZ-KA50VA6 | SUZ-KA60VA6 |
| Refrigerant | | | | R410A*1 | | | | |
| Power Supply | Source | | | Outdoor power supply | | | | |
| | Outdoor (V/Phase/Hz) | | | 230 / Single / 50 | | | | |
| Cooling | Capacity | Rated | kW | – | 2.6 | 3.5 | 4.6 | 5.6 |
| | | Min - Max | kW | – | 1.5 - 3.2 | 1.4 - 3.9 | 2.3 - 5.2 | 2.3 - 6.5 |
| | Total Input | Rated | kW | – | 0.684 | 0.972 | 1.394 | 1.767 |
| | Design Load | | kW | – | 2.6 | 3.5 | 4.6 | 5.6 |
| | Annual Electricity Consumption*2 | | kWh/a | – | 144 | 188 | 256 | 316 |
| | SEER | | | – | 6.3 | 6.5 | 6.3 | 6.2 |
| | | Energy Efficiency Class | | – | A++ | A++ | A++ | A++ |
| Heating (Average Season) | Capacity | Rated | kW | – | 3.2 | 4.0 | 5.0 | 6.4 |
| | | Min - Max | kW | – | 1.3 - 4.2 | 1.7 - 5.0 | 1.7 - 6.0 | 2.5 - 7.4 |
| | Total Input | Rated | kW | – | 0.886 | 1.108 | 1.558 | 2.278 |
| | Design Load | | kW | – | 2.2 | 2.6 | 3.6 | 4.6 |
| | Declared Capacity | at reference design temperature | kW | – | 2.0 (–10°C) | 2.3 (–10°C) | 3.2 (–10°C) | 4.0 (–10°C) |
| | | at bivalent temperature | kW | – | 2.0 (–7°C) | 2.3 (–7°C) | 3.2 (–7°C) | 4.0 (–7°C) |
| | | at operation limit temperature | kW | – | 2.0 (–10°C) | 2.3 (–10°C) | 3.2 (–10°C) | 4.0 (–10°C) |
| | Back Up Heating Capacity | | kW | – | 0.2 | 0.3 | 0.4 | 0.4 |
| | Annual Electricity Consumption*2 | | kWh/a | – | 716 | 845 | 1172 | 1572 |
| | SCOP | | | – | 4.3 | 4.3 | 4.3 | 4.1 |
| | | Energy Efficiency Class | | – | A+ | A+ | A+ | A+ |
| Operating Current (max) | | | A | – | 7.2 | 8.4 | 12.3 | 14.4 |
| Indoor Unit | Input | Rated | kW | 0.02 | 0.02 | 0.02 | 0.03 | 0.04 |
| | Operating Current (max) | | A | 0.17 | 0.20 | 0.24 | 0.32 | 0.43 |
| | Dimensions <Panel> | H × W × D | mm | 245-570-570 <10-625-625> | 245-570-570 <10-625-625> | 245-570-570 <10-625-625> | 245-570-570 <10-625-625> | 245-570-570 <10-625-625> |
| | Weight <Panel> | | kg | 15 <3> | 15 <3> | 15 <3> | 15 <3> | 15 <3> |
| | Air Volume [Lo-Mid-Hi] | | $m^3$/min | 6.0 - 6.5 - 7.0 | 6.5 - 7.5 - 8.5 | 6.5 - 8.0 - 9.5 | 7.0 - 9.0 - 11.5 | 7.5 - 11.5 - 13.0 |
| | Sound Level (SPL) [Lo-Mid-Hi] | | dB(A) | 24 - 26 - 28 | 25 - 28 - 31 | 25 - 30 - 34 | 27 - 34 - 39 | 32 - 40 - 43 |
| | Sound Level (PWL) | | dB(A) | 45 | 48 | 51 | 56 | 60 |
| Outdoor Unit | Dimensions | H × W × D | mm | – | 550 - 800 - 285 | 550 - 800 - 285 | 880 - 840 - 330 | 880 - 840 - 330 |
| | Weight | | kg | – | 30 | 35 | 54 | 50 |
| | Air Volume | Cooling | $m^3$/min | – | 32.6 | 36.3 | 44.6 | 40.9 |
| | | Heating | $m^3$/min | – | 34.7 | 34.8 | 44.6 | 49.2 |
| | Sound Level (SPL) | Cooling | dB(A) | – | 47 | 49 | 52 | 55 |
| | | Heating | dB(A) | – | 48 | 50 | 52 | 55 |
| | Sound Level (PWL) | Cooling | dB(A) | – | 58 | 62 | 65 | 65 |
| | Operating Current (max) | | A | – | 7.0 | 8.2 | 12.0 | 14.0 |
| | Breaker Size | | A | – | 10 | 10 | 20 | 20 |
| Ext. Piping | Diameter | Liquid / Gas | mm | – | 6.35 / 9.52 | 6.35 / 9.52 | 6.35 / 12.7 | 6.35 / 15.88 |
| | Max. Length | Out-In | m | – | 20 | 20 | 30 | 30 |
| | Max. Height | Out-In | m | – | 12 | 12 | 30 | 30 |
| Guaranteed Operating Range [Outdoor] | | Cooling | ℃ | – | –10 ~ +46 | –10 ~ +46 | –15 ~ +46 | –15 ~ +46 |
| | | Heating | ℃ | – | –10 ~ +24 | –10 ~ +24 | –10 ~ +24 | –10 ~ +24 |

*1 Refrigerant leakage contributes to climate change. Refrigerant with lower global warming potential (GWP) would contribute less to global warming than a refrigerant with higher GWP, if leaked to the atmosphere. This appliance contains a refrigerant fluid with a GWP equal to 1975. This means that if 1 kg of this refrigerant fluid would be leaked to the atmosphere, the impact on global warming would be 1975 times higher than 1 kg of $CO_2$, over a period of 100 years. Never try to interfere with the refrigerant circuit yourself or disassemble the product yourself and always ask a professional.
The GWP of R410A is 2088 in the IPCC 4th Assessment Report.

*2 Energy consumption based on standard test results. Actual energy consumption will depend on how the appliance is used and where it is located.

# SEZ SERIES

R32
R410A

SEZ-M25-71DA(L)

This concealed ceiling-mounted indoor unit series is compact, and fits easily into rooms with lowered ceilings. Highly reliable energy-saving performance makes it a best match choice for concealed unit installations.

## Compact Ceiling-concealed Units

Only the intake-air grille and outlet vents are visible when using this ceiling-concealed indoor unit. The rest of the unit is conveniently hidden in the ceiling cavity, essentially leaving the ceiling and walls free of bulky looking devices and maintaining a high-class interior décor. The compact units require minimal space and can be installed in buildings with lowered ceilings, where exposed units were the rule in the past.

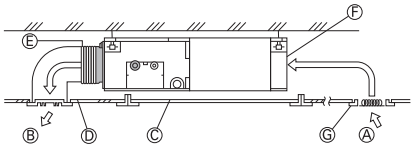


Ⓐ Air inlet
Ⓑ Air outlet
Ⓒ Access door
Ⓓ Ceiling surface
Ⓔ Canvas duct
Ⓕ Air filter
Ⓖ Inlet grille

## Selection of Fan Speeds and Static Pressure Levels

DC fan motor settings have been increased to accommodate more application needs. Three fan speed settings (Low, Medium and High) and four static pressure levels (5, 15, 35 and 50Pa) are now available.

| | |
|---|---|
| SEZ-M25-71DA(L) | 5/15/35/50 Pa |

**Four Levels Available for All Models**

We've lowered the minimum static pressure level, resulting in less room noise when the optimum static pressure is selected.

| | SPL (Low Fan Mode) |
|---|---|
| | SEZ-M |
| External Static Pressure | 15 Pa |
| 35 | 23dB |
| 50 | 30dB |
| 60 | 30dB |
| 71 | 30dB |

## Drain Pump (Optional)

The PAC-KE07DM-E drain pump is now available as an option.
With the pump, a drain hose length of up to 550mm can be used, adding to increased installation possibilities.

# SEZ-M SERIES

DC Inverter | Joint Lap | DC Rotary | Rare Earth Magnet | DC Fan Motor | PAM | Grooved Piping | Heat Caulking Fixing Method

## Indoor Unit

R32
R410A

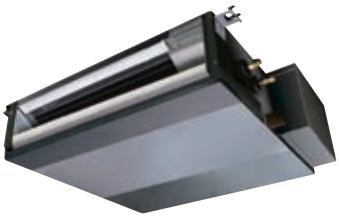

SEZ-M25/35/50/60/71DA (Requires Wired Remote Controller)
SEZ-M25/35/50/60/71DAL (Wireless Remote Controller is enclosed)

## Outdoor Unit

R32

SUZ-M25/35VA

R32

SUZ-M50VA

R32

SUZ-M60/71VA

## Remote Controller

Enclosed in SEZ-M DAL

*optional (for SEZ-M DA)

*optional (for SEZ-M DA)

*optional (for SEZ-M DA)

AUTO | ACO | Auto Restart | Low Temp Cooling | DA (Optional) | Group Control (Optional) | M-NET connection (Optional) | Wi-Fi Interface (Optional) | MXZ connection | Drain Lift Up (Optional) | Flare connection | Self Diagnosis | Failure Recall

| Type | | | | Inverter Heat Pump | | | | |
|---|---|---|---|---|---|---|---|---|
| Indoor Unit | | | | SEZ-M25DA | SEZ-M35DA | SEZ-M50DA | SEZ-M60DA | SEZ-M71DA |
| Outdoor Unit | | | | SUZ-M25VA | SUZ-M35VA | SUZ-M50VA | SUZ-M60VA | SUZ-M71VA |
| Refrigerant | | | | R32*1 | | | | |
| Power Supply | Source | | | Outdoor power supply | | | | |
| | Outdoor (V/Phase/Hz) | | | 230 / Single / 50 | | | | |
| Cooling | Capacity | Rated | kW | 2.5 | 3.5 | 5.0 | 6.1 | 7.1 |
| | | Min - Max | kW | 1.4 - 3.2 | 0.7 - 3.9 | 1.1 - 5.6 | 1.6 - 6.3 | 2.2 - 8.1 |
| | Total Input | Rated | kW | 0.71 | 1.00 | 1.54 | 1.84 | 2.15 |
| | Design Load | | kW | 2.5 | 3.5 | 5.0 | 6.1 | 7.1 |
| | Annual Electricity Consumption*2 | | kWh/a | 165 | 207 | 290 | 386 | 452 |
| | SEER*3 | | | 5.3 | 5.9 | 6.0 | 5.5 | 5.5 |
| | | Energy Efficiency Class | | A | A+ | A+ | A | A |
| Heating (Average Season) | Capacity | Rated | kW | 2.9 | 4.2 | 6.0 | 7.4 | 8.0 |
| | | Min - Max | kW | 1.3 - 4.2 | 1.1 - 5.0 | 1.5 - 7.2 | 1.6 - 8.0 | 2.0 - 10.2 |
| | Total Input | Rated | kW | 0.80 | 1.07 | 1.61 | 2.04 | 2.28 |
| | Design Load | | kW | 2.2 | 2.6 | 4.3 | 4.6 | 5.8 |
| | Declared Capacity | at reference design temperature | kW | 2.0 (–10°C) | 2.3 (–10°C) | 3.8 (–10°C) | 4.1 (–10°C) | 5.2 (–10°C) |
| | | at bivalent temperature | kW | 2.0 (–7°C) | 2.3 (–7°C) | 3.8 (–7°C) | 4.1 (–7°C) | 5.2 (–7°C) |
| | | at operation limit temperature | kW | 2.0 (–10°C) | 2.3 (–10°C) | 3.8 (–10°C) | 4.1 (–10°C) | 5.2 (–10°C) |
| | Back Up Heating Capacity | | kW | 0.2 | 0.3 | 0.5 | 0.5 | 0.6 |
| | Annual Electricity Consumption*2 | | kWh/a | 807 | 884 | 1499 | 1525 | 2072 |
| | SCOP*3 | | | 3.8 | 4.1 | 4.0 | 4.2 | 3.9 |
| | | Energy Efficiency Class | | A | A+ | A+ | A+ | A |
| Operating Current (max) | | | A | 7.2 | 9.0 | 14.2 | 15.5 | 15.7 |
| Indoor Unit | Input | Rated | kW | 0.04 | 0.05 | 0.07 | 0.07 | 0.10 |
| | Operating Current (max) | | A | 0.40 | 0.50 | 0.70 | 0.70 | 0.90 |
| | Dimensions <Panel> | H × W × D | mm | 200 - 790 - 700 | 200 - 990 - 700 | 200 - 990 - 700 | 200 - 1190 - 700 | 200 - 1190 - 700 |
| | Weight <Panel> | | kg | 18 | 21 | 23 | 27 | 27 |
| | Air Volume [Lo-Mid-Hi] | | $m^3$/min | 6 - 7 - 9 | 7 - 9 - 11 | 10 - 13 - 15 | 12 - 15 - 18 | 12 - 16 - 20 |
| | External Static Pressure | | Pa | 5 / 15 / 35 / 50 | 5 / 15 / 35 / 50 | 5 / 15 / 35 / 50 | 5 / 15 / 35 / 50 | 5 / 15 / 35 / 50 |
| | Sound Level (SPL) [Lo-Mid-Hi] | | dB(A) | 22 - 25 - 29 | 23 - 28 - 33 | 29 - 33 - 36 | 29 - 33 - 37 | 29 - 34 - 39 |
| | Sound Level (PWL) | | dB(A) | 50 | 53 | 57 | 58 | 60 |
| Outdoor Unit | Dimensions | H × W × D | mm | 550 - 800 - 285 | 550 - 800 - 285 | 714 - 800 - 285 | 880 - 840 - 330 | 880 - 840 - 330 |
| | Weight | | kg | 30 | 35 | 41 | 54 | 55 |
| | Air Volume | Cooling | $m^3$/min | 36.3 | 34.3 | 45.8 | 50.1 | 50.1 |
| | | Heating | $m^3$/min | 34.6 | 32.7 | 43.7 | 50.1 | 50.1 |
| | Sound Level (SPL) | Cooling | dB(A) | 45 | 48 | 48 | 49 | 49 |
| | | Heating | dB(A) | 46 | 48 | 49 | 51 | 51 |
| | Sound Level (PWL) | Cooling | dB(A) | 59 | 59 | 64 | 65 | 66 |
| | Operating Current (max) | | A | 6.8 | 8.5 | 13.5 | 14.8 | 14.8 |
| | Breaker Size | | A | 10 | 10 | 20 | 20 | 20 |
| Ext. Piping | Diameter | Liquid / Gas | mm | 6.35 / 9.52 | 6.35 / 9.52 | 6.35 / 12.7 | 6.35 / 15.88 | 9.52 / 15.88 |
| | Max. Length | Out-In | m | 20 | 20 | 30 | 30 | 30 |
| | Max. Height | Out-In | m | 12 | 12 | 30 | 30 | 30 |
| Guaranteed Operating Range [Outdoor] | | Cooling | °C | –10 ~ +46 | –10 ~ +46 | –15 ~ +46 | –15 ~ +46 | –15 ~ +46 |
| | | Heating | °C | –10 ~ +24 | –10 ~ +24 | –10 ~ +24 | –10 ~ +24 | –10 ~ +24 |

*1 Refrigerant leakage contributes to climate change. Refrigerant with lower global warming potential (GWP) would contribute less to global warming than a refrigerant with higher GWP, if leaked to the atmosphere. This appliance contains a refrigerant fluid with a GWP equal to 1975. This means that if 1 kg of this refrigerant fluid would be leaked to the atmosphere, the impact on global warming would be 1975 times higher than 1 kg of $CO_2$, over a period of 100 years. Never try to interfere with the refrigerant circuit yourself or disassemble the product yourself and always ask a professional. The GWP of R410A is 2088 in the IPCC 4th Assessment Report.
*2 Energy consumption based on standard test results. Actual energy consumption will depend on how the appliance is used and where it is located.
*3 SEER/SCOP are measured at ESP 35Pa.

# SEZ-M SERIES

DC Inverter | Joint Lap | DC Rotary | Rare Earth Magnet | DC Fan Motor | PAM | Grooved Piping | Heat Caulking Fixing Method

## Indoor Unit

R32
R410A

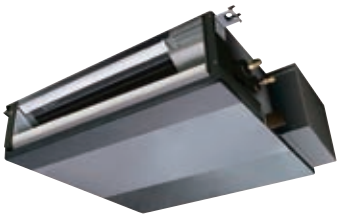

SEZ-M25/35/50/60/71DA (Requires Wired Remote Controller)
SEZ-M25/35/50/60/71DAL (Wireless Remote Controller is enclosed)

## Outdoor Unit

R410A

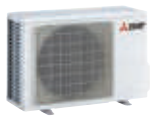

SUZ-KA25/35VA6

R410A

SUZ-KA50/60/71VA6

## Remote Controller

Enclosed in SEZ-M DAL

*optional (for SEZ-M DA)

*optional (for SEZ-M DA)

*optional (for SEZ-M DA)

AUTO | ACO | Auto Restart | Low Temp Cooling | DA (Optional) | Group Control (Optional) | M-NET connection (Optional) | Wi-Fi Interface (Optional) | MXZ connection | Drain Lift Up (Optional) | Flare connection | Self Diagnosis | Failure Recall

| Type | | | | Inverter Heat Pump | | | | |
|---|---|---|---|---|---|---|---|---|
| Indoor Unit | | | | SEZ-M25DA(L) | SEZ-M35DA(L) | SEZ-M50DA(L) | SEZ-M60DA(L) | SEZ-M71DA(L) |
| Outdoor Unit | | | | SUZ-KA25VA6 | SUZ-KA35VA6 | SUZ-KA50VA6 | SUZ-KA60VA6 | SUZ-KA71VA6 |
| Refrigerant | | | | R410A*1 | | | | |
| **Power Supply** | **Source** | | | Outdoor power supply | | | | |
| | **Outdoor (V/Phase/Hz)** | | | 230 / Single / 50 | | | | |
| **Cooling** | **Capacity** | Rated | kW | 2.5 | 3.5 | 5.1 | 5.6 | 7.1 |
| | | Min - Max | kW | 1.5 - 3.2 | 1.4 - 3.9 | 2.3 - 5.6 | 2.3 - 6.3 | 2.8 - 8.3 |
| | **Total Input** | Rated | kW | 0.730 | 1.010 | 1.580 | 1.740 | 2.210 |
| | **Design Load** | | kW | 2.5 | 3.5 | 5.1 | 5.6 | 7.1 |
| | **Annual Electricity Consumption***2 | | kWh/a | 162 | 210 | 300 | 356 | 458 |
| | **SEER***3 | | | 5.3 | 5.7 | 5.8 | 5.3 | 5.3 |
| | | **Energy Efficiency Class** | | A | A+ | A+ | A | A |
| **Heating (Average Season)** | **Capacity** | Rated | kW | 2.9 | 4.2 | 6.4 | 7.4 | 8.1 |
| | | Min - Max | kW | 1.3 - 4.5 | 1.7 - 5.0 | 1.7 - 7.2 | 2.5 - 8.0 | 2.6 - 10.4 |
| | **Total Input** | Rated | kW | 0.803 | 1.130 | 1.800 | 2.200 | 2.268 |
| | **Design Load** | | kW | 2.2 | 2.8 | 4.6 | 5.5 | 6.0 |
| | **Declared Capacity** | at reference design temperature | kW | 1.9 (–10°C) | 2.5 (–10°C) | 4.1 (–10°C) | 4.5 (–10°C) | 5.3 (–10°C) |
| | | at bivalent temperature | kW | 1.9 (–7°C) | 2.5 (–7°C) | 4.1 (–7°C) | 4.8 (–7°C) | 5.3 (–7°C) |
| | | at operation limit temperature | kW | 1.9 (–10°C) | 2.5 (–10°C) | 4.1 (–10°C) | 4.5 (–10°C) | 5.3 (–10°C) |
| | **Back Up Heating Capacity** | | kW | 0.3 | 0.3 | 0.5 | 1.0 | 0.7 |
| | **Annual Electricity Consumption***2 | | kWh/a | 808 | 979 | 1653 | 1878 | 2202 |
| | **SCOP***3 | | | 3.8 | 4.0 | 3.9 | 4.1 | 3.8 |
| | | **Energy Efficiency Class** | | A | A+ | A | A+ | A |
| **Operating Current (max)** | | | A | 7.4 | 8.7 | 12.7 | 14.7 | 17.0 |
| **Indoor Unit** | **Input** | Rated | kW | 0.040 | 0.050 | 0.070 | 0.070 | 0.100 |
| | **Operating Current (max)** | | A | 0.4 | 0.5 | 0.7 | 0.7 | 0.9 |
| | **Dimensions <Panel>** | H × W × D | mm | 200 - 790 - 700 | 200 - 990 - 700 | 200 - 990 - 700 | 200 - 1190 - 700 | 200 - 1190 - 700 |
| | **Weight <Panel>** | | kg | 18 | 21 | 23 | 27 | 27 |
| | **Air Volume** [Lo-Mid-Hi] | | $m^3$/min | 6 - 7 - 9 | 7 - 9 - 11 | 10 - 13 - 15 | 12 - 15 - 18 | 12 - 16 - 20 |
| | **External Static Pressure** | | Pa | 5 / 15 / 35 / 50 | 5 / 15 / 35 / 50 | 5 / 15 / 35 / 50 | 5 / 15 / 35 / 50 | 5 / 15 / 35 / 50 |
| | **Sound Level (SPL)** [Lo-Mid-Hi] | | dB(A) | 22 - 25 - 29 | 23 - 28 - 33 | 29 - 33 - 36 | 29 - 33 - 37 | 29 - 34 - 39 |
| | **Sound Level (PWL)** | | dB(A) | 50 | 53 | 57 | 58 | 60 |
| **Outdoor Unit** | **Dimensions** | H × W × D | mm | 550 - 800 - 285 | 550 - 800 - 285 | 880 - 840 - 330 | 880 - 840 - 330 | 880 - 840 - 330 |
| | **Weight** | | kg | 30 | 35 | 54 | 50 | 53 |
| | **Air Volume** | Cooling | $m^3$/min | 32.6 | 36.3 | 44.6 | 40.9 | 50.1 |
| | | Heating | $m^3$/min | 34.7 | 34.8 | 44.6 | 49.2 | 48.2 |
| | **Sound Level (SPL)** | Cooling | dB(A) | 47 | 49 | 52 | 55 | 55 |
| | | Heating | dB(A) | 48 | 50 | 52 | 55 | 55 |
| | **Sound Level (PWL)** | Cooling | dB(A) | 58 | 62 | 65 | 65 | 69 |
| | **Operating Current (max)** | | A | 7.0 | 8.0 | 12.0 | 14.0 | 16.1 |
| | **Breaker Size** | | A | 10 | 10 | 20 | 20 | 20 |
| **Ext. Piping** | **Diameter** | Liquid / Gas | mm | 6.35 / 9.52 | 6.35 / 9.52 | 6.35 / 12.7 | 6.35 / 15.88 | 9.52 / 15.88 |
| | **Max. Length** | Out-In | m | 20 | 20 | 30 | 30 | 30 |
| | **Max. Height** | Out-In | m | 12 | 12 | 30 | 30 | 30 |
| **Guaranteed Operating Range** [Outdoor] | | Cooling | °C | –10 ~ +46 | –10 ~ +46 | –15 ~ +46 | –15 ~ +46 | –15 ~ +46 |
| | | Heating | °C | –10 ~ +24 | –10 ~ +24 | –10 ~ +24 | –10 ~ +24 | –10 ~ +24 |

*1 Refrigerant leakage contributes to climate change. Refrigerant with lower global warming potential (GWP) would contribute less to global warming than a refrigerant with higher GWP, if leaked to the atmosphere. This appliance contains a refrigerant fluid with a GWP equal to 1975. This means that if 1 kg of this refrigerant fluid would be leaked to the atmosphere, the impact on global warming would be 1975 times higher than 1 kg of $CO_2$, over a period of 100 years. Never try to interfere with the refrigerant circuit yourself or disassemble the product yourself and always ask a professional. The GWP of R410A is 2088 in the IPCC 4th Assessment Report.
*2 Energy consumption based on standard test results. Actual energy consumption will depend on how the appliance is used and where it is located.
*3 SEER/SCOP are measured at ESP 35Pa.

# P

SERIES

# SELECTION

Line-up includes a selection of eight indoor units and four series of outdoor units.
Easily construct a system that best matches room air conditioning needs.

## R32 INDOOR UNIT

4-way ceiling-cassette
PLA-ZM EA
PLA-M EA

Wall-mounted
PKA-M HA(L)
PKA-M KA(L)

Ceiling-concealed
PEAD-M

Ceiling-suspended
PCA-M

Professional Kitchen
PCA-M HA

## R32 OUTDOOR UNIT

### Power Inverter

PUZ-ZM35/50

PUZ-ZM60/71

PUZ-ZM100/125/140/
200/250

### Standard Inverter

SUZ-M35

SUZ-M50

SUZ-M60/71

PUZ-M100/125/140

PUZ-M200/250

✻ Some indoor units cannot be used with this unit.

## R410A INDOOR UNIT

4-way ceiling-cassette
PLA-ZM EA
PLA-M EA

Wall-mounted
PKA-M HA(L)
PKA-M KA(L)

Ceiling-concealed
PEAD-M

Floor-standing
PSA-RP

Ceiling-suspended
PCA-M

Professional Kitchen
PCA-M HA

Ceiling-concealed
PEA-WKA

## R410A OUTDOOR UNIT

### Power Inverter

PUHZ-ZRP35/50

PUHZ-ZRP60/71

PUHZ-ZRP100/125/140/
200/250

### Standard Inverter

SUZ-KA35

SUZ-KA50/60/71

PUHZ-P100/125/140

PUHZ-P200/250

✻ Some indoor units cannot be used with this unit.

To confirm compatibility with the MXZ Series, refer to the MXZ Series page.

## SELECT COMBINATION

Choose the installation pattern for the indoor units. (In the case of a multi-system, distribution piping is necessary, so please select the necessary piping as well.)

### Single System

### Simultaneous Multi-System

**Twin** Allows simultaneous operation of two indoor units on one floor.

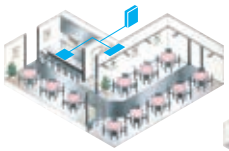

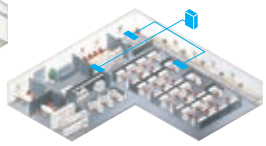

**Triple** Can cover a large-scale space or dispersed installation on the same floor.

**Quadruple** Realises the optimum temperature distribution even in a large space.

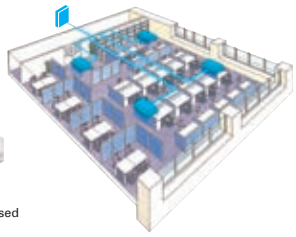

Connectable Combinations for Inverter Units

| Outdoor Unit Capacity | Indoor Unit Capacity | | |
|---|---|---|---|
| | Twin<br>50 : 50 | Triple<br>33 : 33 : 33 | Quadruple<br>25 : 25 : 25 : 25 |
| 71 | 35 × 2 | — | — |
| 100 | 50 × 2 | — | — |
| 125 | 60 × 2 | — | — |
| 140 | 71 × 2 | 50 × 3 | — |
| 200 | 100 × 2 | 60 × 3 | 50 × 4 |
| 250 | 125 × 2 | 71 × 3 | 60 × 4 |
| Distribution Pipe | MSDD-50TR-E<br>MSDD-50WR-E<br>MSDD-50TR2-E2<br>MSDD-50WR2-E | MSDT-111R-E<br>MSDT-111R3-E | MSDF-1111R-E<br>MSDF-1111R2-E |

Notes: 1) Indoor unit combinations with floor-standing (PS) units and other types are impossible.
2) The distribution pipe listed is required for simultaneous multi-systems.

# Power Inverter SERIES

Our Eco-conscious Power Inverter Series is designed to achieve industry-leading seasonal chergy-efficiency throught use of New R32 refrigerant and advanced technologies.

PUZ-ZM35/50VKA

PUZ-ZM60/71VHA

PUZ-ZM100/125/140V(Y)KA
PUZ-ZM200/250YKA

## Industry-leading energy efficiency

Introduction of new R32 refrigerant realises improved cooling efficiency. Rating of more than 7.0 achieved for all capacity range.

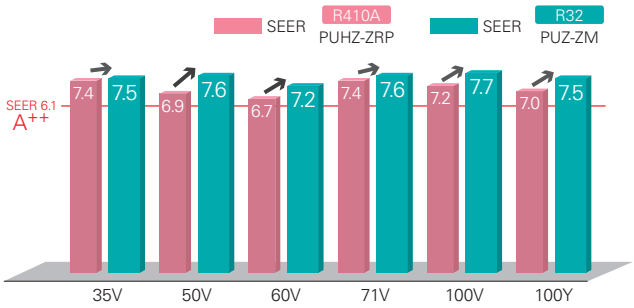


Introduction of new R32 refrigerant reduces energy consumption and realises energy savings.

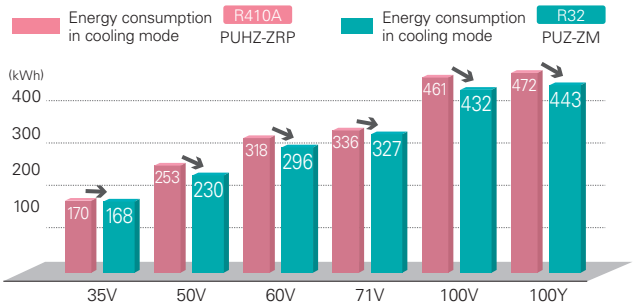


*Specifications reported are figures when PLA-ZM**EA is connected.

## Longer piping (60/71/100/125/140/200/250)

Longer piping length realised for 60, 71, 100, 125, 140, 200 and 250 classes, widely increasing installation flexibility.

| | Piping Length | |
|---|---|---|
| | R410A PUHZ-ZRP | R32 PUZ-ZM |
| 35/50 | 50m | 50m |
| 60/71 | 50m | 55m |
| 100/125/140 | 75m | 100m |
| 200/250 | 100m | 100m |

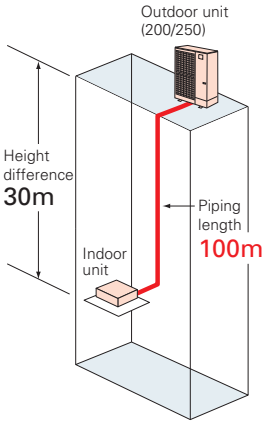


## Rated heating capacity maintained down to –3°C*

Rated heating capacity maintained even when the outside temperature is down to –3°C. Stay warm even at times of cold weather.

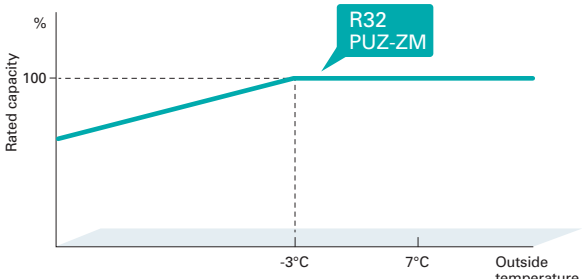


*PUZ-ZM35/50/60/71/100/125/140 only.

## 30Pa external static pressure

*Option (requires PAC-SJ71FM-E)

An external static pressure of 30Pa enables the outdoor unit to be installed on balconies in high-rise building or spaces near louvers.

30Pa external static pressure fan motor (option)
(PAC-SJ71FM-E)

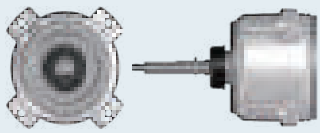

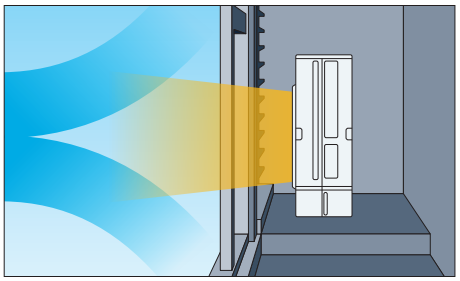

*Rated noise level will be higher when equipped with this option.

# Standard Inverter SERIES

Our Standard Series become light and compact with greater energy-saving performance.

SUZ-M35VA

SUZ-M50VA

SUZ-M60/71VA

PUZ-M100/125/140V(Y)KA

PUZ-M200/250YKA

## Improved energy efficiency

Introduction of new R32 refrigerant realises improved cooling efficiency. Rating of more than 6.6 achieved for all capacity range.

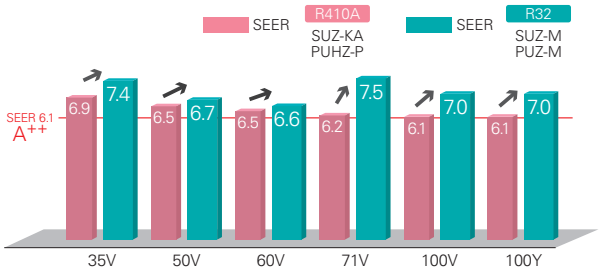


*Specifications are figures when PLA-RP/M is connected.

## Longer piping (100/125/140/200/250)

Longer piping length realised for 100, 125, 140, 200 and 250 classes, widely increasing installation flexibility.

| | Max. Piping Length | |
|---|---|---|
| | R410A SUZ-KA PUHZ-P | R32 SUZ-M PUZ-M |
| 25/35 | 20m | 20m |
| 50/60/71 | 30m | 30m |
| 100 | 50m | 55m |
| 125/140 | 50m | 65m |
| 200/250 | 70m | 70m |

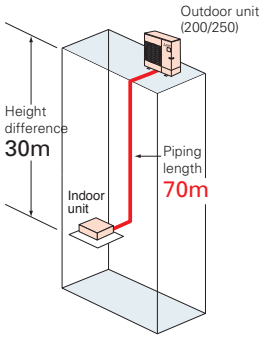


## Light weight and compact size

Compact design fits into narrow outdoor unit space of condominiums and offices. Light weight design facilitates easy installation.

**SUZ-KA50VA6**

| | |
|---|---|
| Height | 880mm |
| Weight | 54kg |

**SUZ-M50VA**

| | | |
|---|---|---|
| Height | 714mm | 18% reduction |
| Weight | 41kg | 24% reduction |

**PUHZ-P140YHA2**

| | |
|---|---|
| Height | 1,350mm |
| Weight | 101kg |

**PUZ-M140YKA**

| | | |
|---|---|---|
| Height | 981mm | 27% reduction |
| Weight | 85kg | 15% reduction |

### Unobstructive, compact, and easy to hide from view

Conventional outdoor units may spoil the view. Due to its compact size, the new model can be installed in locations that previous model is not suitable.

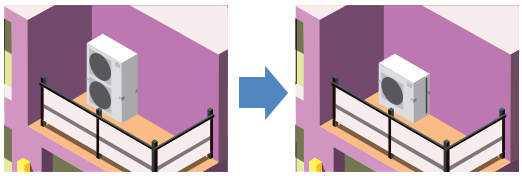

### Easy transportation and installation

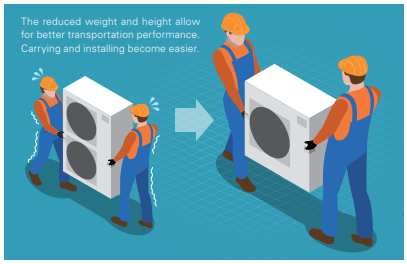

Transport efficiency improves thanks to its low height. The unit can even be transported by minivan.

# PLA SERIES

R32 R410A

PLA-ZM35/50/60/71/100/125/140EA

R32 R410A

PLA-M35/50/60/71/100/125/140EA

A complete line-up including deluxe units that offer added energy savings. The incorporation of wide air-outlet and the "3D i-see Sensor" enhances airflow distribution control, achieving an enhanced level of comfort throughout the room. The synergy of higher energy efficiency and more comfortable room environment results in the utmost user satisfaction.

## Deluxe 4-way Cassette Line-up

For users seeking even further energy savings, Mitsubishi Electric now offers deluxe units (PLA-ZM) to complete the line-up of models in this series, from 35-140. Compared to the standard models (PLA-RP), deluxe models provide additional energy savings, contributing to a significant reduction in electricity costs.

### ■Indoor/Outdoor Unit Combinations

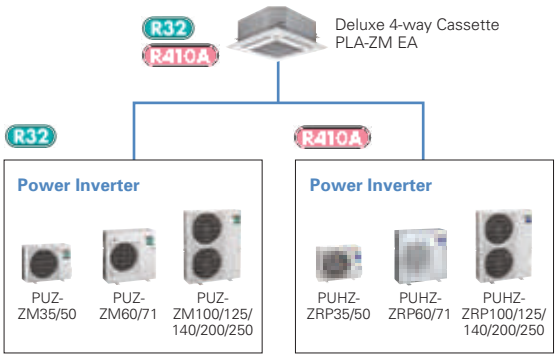


### ■Line-up

| Series \ Model | 35 | 50 | 60 | 71 | 100 | 125 | 140 |
|---|---|---|---|---|---|---|---|
| R32 R410A Deluxe 4-way Cassette (PLA-ZM) | ● | ● | ● | ● | ● | ● | ● |
| R32 R410A Standard 4-way Cassette (PLA-M) | ● | ● | ● | ● | ● | ● | ● |

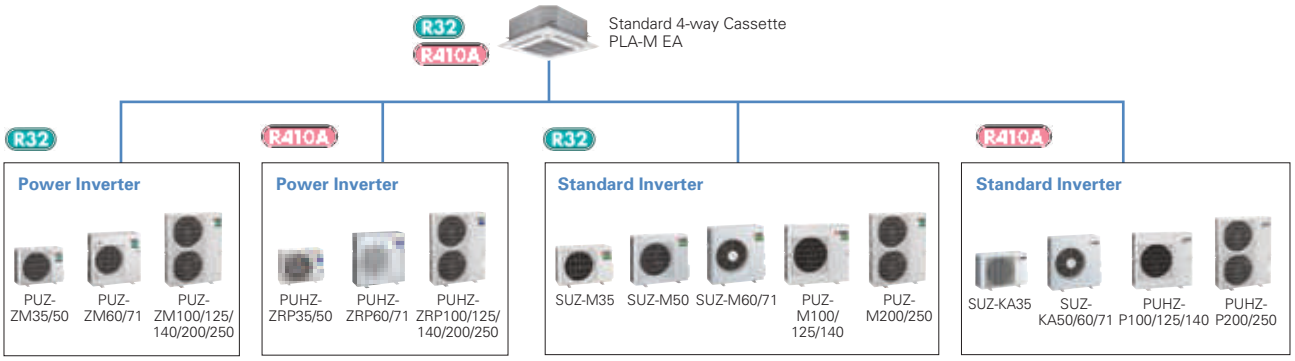


## Industry-leading energy efficiency

Introduction of new R32 refrigerant realises improved cooling efficiency. Rating of more than 7.0 achieved for all capacity range.

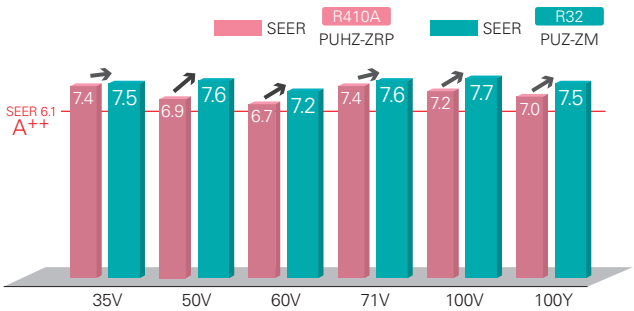


Introduction of new R32 refrigerant reduces energy consumption and realises energy savings.

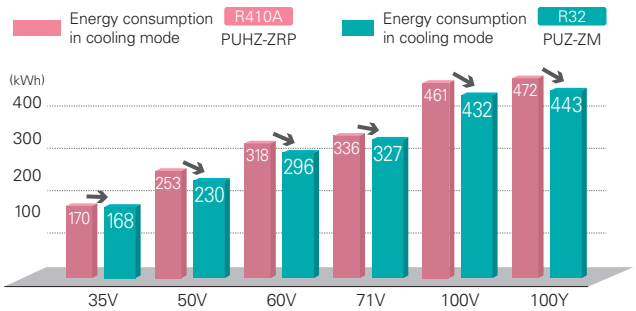


*Specifications reported are figures when PLA-ZM**EA is connected.

## Horizontal Airflow

The new airflow control removes that uncomfortable drafty feeling with the introduction of a horizontal airflow that spreads across the ceiling. The ideal airflow for offices and restaurants.

[Horizontal airflow]
Model name: PLA-ZM140EA
Ceiling height: 3.2m
Mode: Cooling

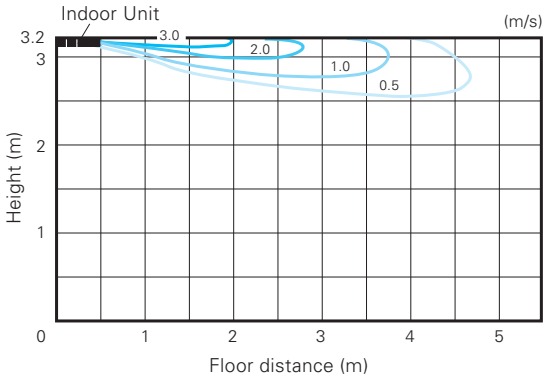

## Automatic Grille Lowering Function (PLP-6EAJ)

An automatic grille lowering function is available for easy filter maintenance.
Special wired and wireless remote controllers can be used to lower the intake grille for maintenance.

Grille Elevation Remote Controller
(comes with the automatic elevation panel)

Wired Remote Controller

Wireless Remote Controller

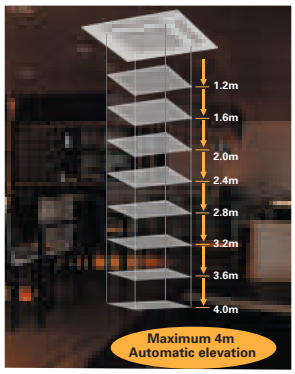


## Easy Installation

### Electrical box wiring

After reviewing the power supply terminal position in the electrical box, the structure was redesigned to improve connectivity. This has made previously complex wiring work easier.

■ Previous model (B Series)

■ New model (E Series)

### Increased space for plumbing work

The top and bottom positions of the liquid and gas pipes have been reversed to allow the gas pipe work, which requires more effort, to be completed first. Further, through structural innovations related to the space around the pipes, the area where the spanner can be moved has been increased, thus improving liquid pipe work and enabling it to be completed smoothly.

■ Previous model (B Series)

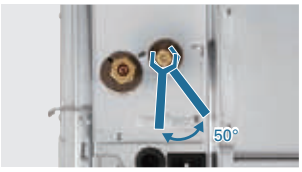


■ New model (E Series)

### Temporary hanging hook

The structure of the panel has been revised and is now equipped with a temporary hanging hook. This has improved work efficiency during panel installation.

### No need to remove screws

Installation is possible without removing the screws for the corner panel and the control box, simply loosen them. This lowers the risk of losing screws.

■ Corner panel

■ Control box cover

### Lightweight decorative panel

After reviewing the structure and materials, weight has been reduced approximately 20% compared to the previous model, reducing the burden of installation.

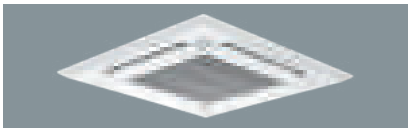

# 3D i-see Sensor for S & P SERIES

## Detects number of people

3D i-see Sensor detects the number of people in the room and sets the air-conditioning power accordingly. This makes automatic power-saving operation possible in places where the number of people entering and exiting is large. Additionally, when the area is continuously unoccupied, the system switches to a more enhanced power-saving mode. Depending on the setting, it will save additional capacity or stop operation altogether.

## Detects people's position

Once the position of a person is detected, the duct angle of the vane is automatically adjusted in that direction. Each vane can be independently set to "block wind" or "not block wind" according to taste.

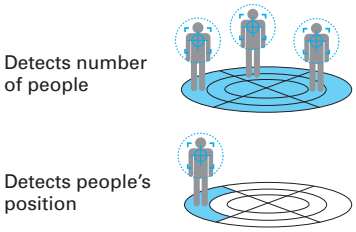


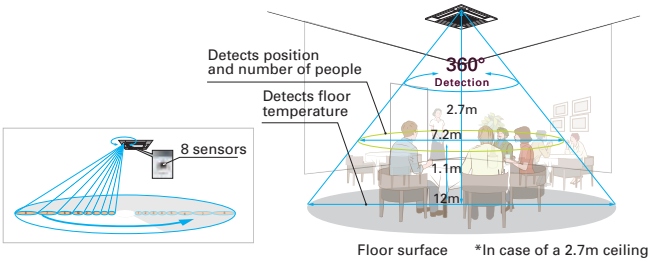


## Detects number of people

### Room occupancy energy-saving mode

The 3D i-see Sensor detects the number of people in the room. It then calculates the occupancy rate based on the maximum number of people in the room up to that point in time in order to save air-conditioning power. When the occupancy rate is approximately 30%, air-conditioning power equivalent to 1°C during both cooling and heating operation is saved. The temperature is controlled according to the number of people.

### No occupancy energy-saving mode

When 3D i-see Sensor detects that no one is in the room, the system is switched to a pre-set power-saving mode. If the room remains unoccupied for more than 60min, air-conditioning power equivalent to 2°C during both cooling and heating operation is saved. This contributes to preventing waste in terms of heating and cooling.

### No occupancy Auto-OFF mode*

When the room remains unoccupied for a pre-set period of time, the air conditioner turns off automatically, thereby providing even greater power savings. The time until operation is stopped can be set in intervals of 10min, ranging from 60 to 180 min.

* When MA Remote Controller is used to control multiple refrigerant systems, "No occupancy Auto-OFF mode" cannot be used.

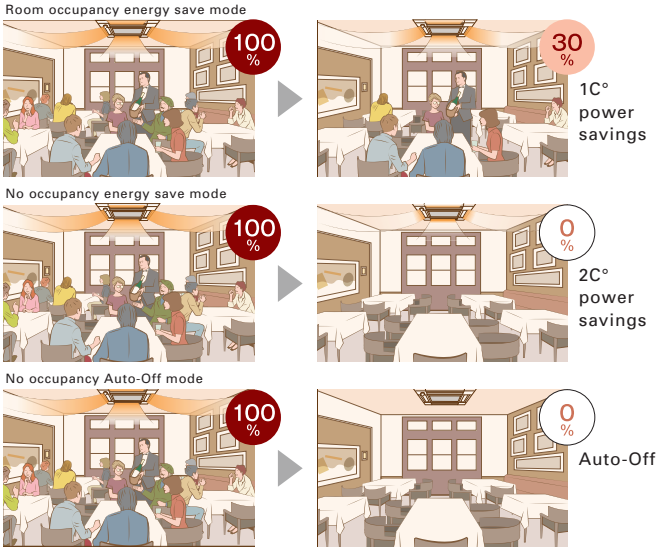


*PAR-40MAA is required for each setting

## Detects people's position

### Direct/Indirect settings*

Some people do not like the feel of wind, some want to be warm from head to toe. People's likes and dislikes vary. With the 3D i-see Sensor, it is possible to choose to block or not block to the wind for each vane.

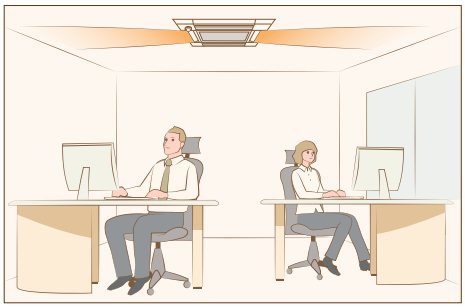

*PAR-40MAA or PAR-SL100A-E is required for each setting.

### Seasonal airflow*

**<When cooling>**
Saves energy while keeping a comfortable effective temperature by automatically switching between ventilation and cooling. When a pre-set temperature is reached, the air conditioning unit switches to swing fan operation to maintain the effective temperature. This clever function contributes to keeping a comfortable coolness.

**<When heating>**
The air conditioning unit automatically switches between circulator and heating. Wasted heat that accumulates near the ceiling is reused via circulation. When a pre-set temperature is reached the air conditioner switches from heating to circulator and blows air in the horizontal direction. It pushes down the warm air that has gathered near the ceiling to people's height, thereby providing smart heating.

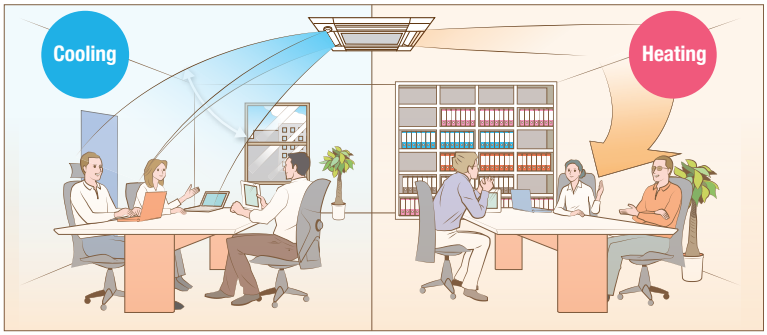


*PAR-40MAA is required for each setting.

# SERIES SELECTION

## Power Inverter Series

Pure White | DC Inverter | 35-71 Joint Lap | Vector Sine Wave | 100-250 DC Scroll | DC Fan Motor | Vector-Wave | 35-140 PAM | Power Receiver | Grooved Piping | 35-71 Heat Caulking Fixing Method

### Indoor Unit

R32

R410A

**Panel** PLA-ZM35/50/60/71/100/125/140EA

| Panel | With Signal Receiver | With 3D i-see Sensor | With Wireless Remote Controller | With Auto Elevation |
|---|---|---|---|---|
| PLP-6EA | | | | |
| PLP-6EAL | ✓ | | | |
| PLP-6EAE | | ✓ | | |
| PLP-6EALE | ✓ | ✓ | | |
| PLP-6EAJ | ✓ | | | ✓ |
| PLP-6EAJE | ✓ | ✓ | | ✓ |
| PLP-6EALM | ✓ | | ✓ | |
| PLP-6EALME | ✓ | ✓ | ✓ | |

### Outdoor Unit

R32

For Single

PUZ-ZM35/50

PUZ-ZM60/71

PUZ-ZM100/125/140

R32

For Multi
(Twin/Triple/Quadruple)

PUZ-ZM71

PUZ-ZM100/125/140/200/250

### Remote Controller

Optional

Optional

Optional

✻

✻ Enclosed in PLP-6EALM/PLP-6EALME

## PLA-ZM EA Indoor Unit Combinations

Indoor unit combinations shown below are possible.

| Indoor Unit Combination | | Outdoor Unit Capacity | | | | | | | | | | | | | | | | | | | |
|---|---|---|---|---|---|---|---|---|---|---|---|---|---|---|---|---|---|---|---|---|---|
| | | For Single | | | | | | | | | For Twin | | | | | | For Triple | | | For Quadruple | |
| | | 35 | 50 | 60 | 71 | 100 | 125 | 140 | 200 | 250 | 71 | 100 | 125 | 140 | 200 | 250 | 140 | 200 | 250 | 200 | 250 |
| Power Inverter (PUHZ-ZRP) | | 35x1 | 50x1 | 60x1 | 71x1 | 100x1 | 125x1 | 140x1 | – | – | 35x2 | 50x2 | 60x2 | 71x2 | 100x2 | 125x2 | 50x3 | 60x3 | 71x3 | 50x4 | 60x4 |
| | Distribution Pipe | – | – | – | – | – | – | – | – | – | MSDD-50TR2-E | | | | MSDD-50WR2-E | | MSDT-111R3-E | | | MSDF-1111R2-E | |

# SERIES SELECTION

## Standard Inverter Series

Pure White | DC Inverter | 35-71 Joint Lap | Vector Sine Wave | 100-250 DC Scroll | DC Fan Motor | Vector-Wave | 35-140 PAM | Power Receiver | Grooved Piping | 35-71 Heat Caulking Fixing Method

### Indoor Unit

R32

R410A

**Panel** PLA-M35/50/60/71/100/125/140EA

| Panel | With Signal Receiver | With 3D i-see Sensor | With Wireless Remote Controller | With Auto Elevation |
|---|---|---|---|---|
| PLP-6EA | | | | |
| PLP-6EAL | ✓ | | | |
| PLP-6EAE | | ✓ | | |
| PLP-6EALE | ✓ | ✓ | | |
| PLP-6EAJ | ✓ | | | ✓ |
| PLP-6EAJE | ✓ | ✓ | | ✓ |
| PLP-6EALM | ✓ | | ✓ | |
| PLP-6EALME | ✓ | ✓ | ✓ | |

### Outdoor Unit

R32

For Single

SUZ-M35

SUZ-M50

SUZ-M60/71

PUZ-M100/125/140

R32

For Multi
(Twin/Triple/Quadruple)

PUZ-M100/125/140

PUZ-M200/250

### Remote Controller

Optional

Optional

Optional

✻

✻ Enclosed in PLP-6EALM/PLP-6EALME

## PLA-M EA Indoor Unit Combinations

Indoor unit combinations shown below are possible.

| Indoor Unit Combination | | Outdoor Unit Capacity | | | | | | | | | | | | | | | | | | | |
|---|---|---|---|---|---|---|---|---|---|---|---|---|---|---|---|---|---|---|---|---|---|
| | | For Single | | | | | | | | | For Twin | | | | | | For Triple | | | For Quadruple | |
| | | 35 | 50 | 60 | 71 | 100 | 125 | 140 | 200 | 250 | 71 | 100 | 125 | 140 | 200 | 250 | 140 | 200 | 250 | 200 | 250 |
| Standard Inverter (SUZ & PUHZ-P) | | 35x1 | 50x1 | 60x1 | 71x1 | 100x1 | 125x1 | 140x1 | – | – | – | 50x2 | 60x2 | 71x2 | 100x2 | 125x2 | 50x3 | 60x3 | 71x3 | 50x4 | 60x4 |
| | Distribution Pipe | – | – | – | – | – | – | – | – | – | – | MSDD-50TR2-E | | | MSDD-50WR2-E | | MSDT-111R3-E | | | MSDF-1111R2-E | |

# PLA-ZM SERIES

POWER INVERTER

i-see Sensor (Optional) | Demand Control (Optional) | Pure White | AUTO VANE | Fresh-air Intake | High-efficiency (Optional) | Long Life | Check! | SWING | High Ceiling | Low Ceiling | AUTO | | ACO | Auto Restart | Low Temp Cooling

Silent | Ampere Limit (60-140V/200/250) | Rotation Back-up (Optional) | (Optional) | Group Control | M-NET connection (Optional) | COMPO | Wi-Fi Interface (Optional) | Cleaning-free pipe reuse | Wiring Reuse (Optional) | Drain Lift Up | Pump Down | Flare connection | Self Diagnosis | Failure Recall

| Type | | | | Inverter Heat Pump | | | | | | | | | |
|---|---|---|---|---|---|---|---|---|---|---|---|---|---|
| Indoor Unit | | | | PLA-ZM35EA | PLA-ZM50EA | PLA-ZM60EA | PLA-ZM71EA | PLA-ZM100EA | | PLA-ZM125EA | | PLA-ZM140EA | |
| Outdoor Unit | | | | PUZ-ZM35VKA | PUZ-ZM50VKA | PUZ-ZM60VHA | PUZ-ZM71VHA | PUZ-ZM100VKA | PUZ-ZM100YKA | PUZ-ZM125VKA | PUZ-ZM125YKA | PUZ-ZM140VKA | PUZ-ZM140YKA |
| Refrigerant | | | | R32*1 | | | | | | | | | |
| Power Supply | Source | | | Outdoor power supply | | | | | | | | | |
| | Outdoor (V/Phase/Hz) | | | VKA・VHA:230 / Single / 50, YKA:400 / Three / 50 | | | | | | | | | |
| Cooling | Capacity | Rated | kW | 3.6 | 5.0 | 6.1 | 7.1 | 9.5 | 9.5 | 12.5 | 12.5 | 13.4 | 13.4 |
| | | Min - Max | kW | 1.6 - 4.5 | 2.3 - 5.6 | 2.7 - 6.5 | 3.3 - 8.1 | 4.9 - 11.4 | 4.9 - 11.4 | 5.5 - 14.0 | 5.5 - 14.0 | 6.2 - 15.0 | 6.2 - 15.0 |
| | Total Input | Rated | kW | 0.705 | 1.106 | 1.452 | 1.651 | 2.065 | 2.065 | 3.378 | 3.378 | 3.722 | 3.722 |
| | EER | | | 5.10 | 4.52 | 4.20 | 4.30 | 4.60 | 4.60 | 3.70 | 3.70 | 3.60 | 3.60 |
| | | EEL Rank | | – | – | – | – | – | – | – | – | – | – |
| | Design Load | | kW | 3.6 | 5.0 | 6.1 | 7.1 | 9.5 | 9.5 | – | – | – | – |
| | Annual Electricity Consumption*2 | | kWh/a | 168 | 230 | 296 | 327 | 432 | 443 | – | – | – | – |
| | SEER | | | 7.5 | 7.6 | 7.2 | 7.6 | 7.7 | 7.5 | – | – | – | – |
| | | Energy Efficiency Class | | A++ | A++ | A++ | A++ | A++ | A++ | – | – | – | – |
| Heating (Average Season) | Capacity | Rated | kW | 4.1 | 6.0 | 7.0 | 8.0 | 11.2 | 11.2 | 14.0 | 14.0 | 16.0 | 16.0 |
| | | Min - Max | kW | 1.6 - 5.2 | 2.5 - 7.3 | 2.8 - 8.2 | 3.5 - 10.2 | 4.5 - 14.0 | 4.5 - 14.0 | 5.0 - 16.0 | 5.0 - 16.0 | 5.7 - 18.0 | 5.7 - 18.0 |
| | Total Input | Rated | kW | 0.820 | 1.363 | 1.707 | 1.818 | 2.604 | 2.604 | 3.674 | 3.674 | 4.312 | 4.312 |
| | COP | | | 5.00 | 4.40 | 4.10 | 4.40 | 4.30 | 4.30 | 3.81 | 3.81 | 3.71 | 3.71 |
| | | EEL Rank | | – | – | – | – | – | – | – | – | – | – |
| | Design Load | | kW | 2.5 | 3.8 | 4.4 | 4.7 | 7.8 | 7.8 | – | – | – | – |
| | Declared Capacity | at reference design temperature | kW | 2.5 (–10°C) | 3.8 (–10°C) | 4.4 (–10°C) | 4.7 (–10°C) | 7.8 (–10°C) | 7.8 (–10°C) | – | – | – | – |
| | | at bivalent temperature | kW | 2.5 (–10°C) | 3.8 (–10°C) | 4.4 (–10°C) | 4.7 (–10°C) | 7.8 (–10°C) | 7.8 (–10°C) | – | – | – | – |
| | | at operation limit temperature | kW | 2.1 (–11°C) | 3.7 (–11°C) | 2.8 (–20°C) | 3.5 (–20°C) | 5.8 (–20°C) | 5.8 (–20°C) | – | – | – | – |
| | Back Up Heating Capacity | | kW | 0 | 0 | 0 | 0 | 0 | 0 | – | – | – | – |
| | Annual Electricity Consumption*2 | | kWh/a | 745 | 1083 | 1339 | 1370 | 2277 | 2277 | – | – | – | – |
| | SCOP | | | 4.7 | 4.9 | 4.6 | 4.8 | 4.8 | 4.8 | – | – | – | – |
| | | Energy Efficiency Class | | A++ | A++ | A++ | A++ | A++ | A++ | – | – | – | – |
| Operating Current (max) | | | A | 13.2 | 13.2 | 19.2 | 19.3 | 27.0 | 8.5 | 27.0 | 10.0 | 28.7 | 13.7 |
| Indoor Unit | Input | Rated | kW | 0.03 | 0.03 | 0.03 | 0.05 | 0.07 | 0.07 | 0.08 | 0.08 | 0.10 | 0.10 |
| | Operating Current (max) | | A | 0.21 | 0.22 | 0.22 | 0.34 | 0.47 | 0.47 | 0.52 | 0.52 | 0.66 | 0.66 |
| | Dimensions <Panel> | H × W × D | mm | 258 - 840 - 840 <40 - 950 - 950> | | | | 298 - 840 - 840 <40 - 950 - 950> | | | | | |
| | Weight <Panel> | | kg | 21 <5> | | | 24 <5> | 26 <5> | 26 <5> | 26 <5> | 26 <5> | 26 <5> | 26 <5> |
| | Air Volume [Lo-Mi2-Mi1-Hi] | | m³/min | 11-13-15-16 | 12-14-16-18 | 12-14-16-18 | 17-19-21-23 | 19-22-25-28 | 19-22-25-28 | 21-24-26-29 | 21-24-26-29 | 24-26-29-32 | 24-26-29-32 |
| | Sound Level (SPL) [Lo-Mi2-Mi1-Hi] | | dB(A) | 26-28-29-31 | 27-29-31-32 | 27-29-31-32 | 28-30-33-36 | 31-34-37-40 | 31-34-37-40 | 33-36-39-41 | 33-36-39-41 | 36-39-42-44 | 36-39-42-44 |
| | Sound Level (PWL) | | dB(A) | 51 | 54 | 54 | 57 | 61 | 61 | 62 | 62 | 65 | 65 |
| Outdoor Unit | Dimensions | H × W × D | mm | 630 - 809 - 300 | | 943 - 950 - 330 (+25) | | 1,338 - 1,050 - 330 (+40) | | | | | |
| | Weight | | kg | 46 | 46 | 70 | 70 | 116 | 123 | 116 | 125 | 118 | 131 |
| | Air Volume | Cooling | m³/min | 45 | 45 | 55 | 55 | 110 | 110 | 120 | 120 | 120 | 120 |
| | | Heating | m³/min | 45 | 45 | 55 | 55 | 110 | 110 | 120 | 120 | 120 | 120 |
| | Sound Level (SPL) | Cooling | dB(A) | 44 | 44 | 47 | 47 | 49 | 49 | 50 | 50 | 50 | 50 |
| | | Heating | dB(A) | 46 | 46 | 49 | 49 | 51 | 51 | 52 | 52 | 52 | 52 |
| | Sound Level (PWL) | Cooling | dB(A) | 65 | 65 | 67 | 67 | 69 | 69 | 70 | 70 | 70 | 70 |
| | Operating Current (max) | | A | 13.0 | 13.0 | 19.0 | 19.0 | 26.5 | 8.0 | 26.5 | 9.5 | 28.0 | 13.0 |
| | Breaker Size | | A | 16 | 16 | 25 | 25 | 32 | 16 | 32 | 16 | 40 | 16 |
| Ext. Piping | Diameter | Liquid / Gas | mm | 6.35 / 12.7 | | 9.52 / 15.88 | 9.52 / 15.88 | 9.52 / 15.88 | 9.52 / 15.88 | 9.52 / 15.88 | 9.52 / 15.88 | 9.52 / 15.88 | 9.52 / 15.88 |
| | Max. Length | Out-In | m | 50 | 50 | 55 | 55 | 100 | 100 | 100 | 100 | 100 | 100 |
| | Max. Height | Out-In | m | 30 | 30 | 30 | 30 | 30 | 30 | 30 | 30 | 30 | 30 |
| Guaranteed Operating Range [Outdoor] | | Cooling*3 | °C | –15 ~ +46 | –15 ~ +46 | –15 ~ +46 | –15 ~ +46 | –15 ~ +46 | –15 ~ +46 | –15 ~ +46 | –15 ~ +46 | –15 ~ +46 | –15 ~ +46 |
| | | Heating | °C | –11 ~ +21 | –11 ~ +21 | –20 ~ +21 | –20 ~ +21 | –20 ~ +21 | –20 ~ +21 | –20 ~ +21 | –20 ~ +21 | –20 ~ +21 | –20 ~ +21 |

*1 Refrigerant leakage contributes to climate change. Refrigerant with lower global warming potential (GWP) would contribute less to global warming than a refrigerant with higher GWP, if leaked to the atmosphere. This appliance contains a refrigerant fluid with a GWP equal to 550. This means that if 1 kg of this refrigerant fluid would be leaked to the atmosphere, the impact on global warming would be 550 times higher than 1 kg of $CO_2$, over a period of 100 years. Never try to interfere with the refrigerant circuit yourself or disassemble the product yourself and always ask a professional. The GWP of R32 is 675 in the IPCC 4th Assessment Report.
*2 Energy consumption based on standard test results. Actual energy consumption will depend on how the appliance is used and where it is located.
*3 Optional air protection guide is required where ambient temperature is lower than –5°C.

# PLA-M SERIES

STANDARD INVERTER

i-see Sensor (Optional) | Demand Control (Optional) | Pure White | AUTO VANE | Fresh-air Intake | High-efficiency (Optional) | Long Life | Check! | SWING | High Ceiling | Low Ceiling | AUTO | | ACO | Auto Restart | Low Temp Cooling

Silent | Ampere Limit (60-140V/200/250) | Rotation Back-up (Optional) | (Optional) | Group Control | M-NET connection (Optional) | COMPO | Wi-Fi Interface (Optional) | Cleaning-free pipe reuse | Wiring Reuse (Optional) | Drain Lift Up | Pump Down | Flare connection | Self Diagnosis | Failure Recall

| Type | | | | Inverter Heat Pump | | | | | | | | | |
|---|---|---|---|---|---|---|---|---|---|---|---|---|---|
| Indoor Unit | | | | PLA-M35EA | PLA-M50EA | PLA-M60EA | PLA-M71EA | PLA-M100EA | | PLA-M125EA | | PLA-M140EA | |
| Outdoor Unit | | | | SUZ-M35VA | SUZ-M50VA | SUZ-M60VA | SUZ-M71VA | PUZ-M100VKA | PUZ-M100YKA | PUZ-M125VKA | PUZ-M125YKA | PUZ-M140VKA | PUZ-M140YKA |
| Refrigerant | | | | R32*1 | | | | | | | | | |
| Power Supply | Source | | | Outdoor power supply | | | | | | | | | |
| | Outdoor (V/Phase/Hz) | | | VA・VKA:230 / Single / 50, YKA:400 / Three / 50 | | | | | | | | | |
| Cooling | Capacity | Rated | kW | 3.6 | 5.5 | 6.1 | 7.1 | 9.5 | 9.5 | 12.1 | 12.1 | 13.4 | 13.4 |
| | | Min - Max | kW | 0.8 - 3.9 | 1.2 - 5.6 | 1.6 - 6.3 | 2.2 - 8.1 | 4.0 - 10.6 | 4.0 - 10.6 | 5.8 - 13.0 | 5.8 - 13.0 | 5.8 - 14.1 | 5.8 - 14.1 |
| | Total Input | Rated | kW | 0.90 | 1.61 | 1.84 | 1.91 | 2.71 | 2.71 | 4.01 | 4.01 | 4.96 | 4.96 |
| | EER | | | 4.00 | 3.40 | 3.30 | 3.70 | 3.50 | 3.50 | 3.01 | 3.01 | 2.70 | 2.70 |
| | | EEL Rank | | – | – | – | – | – | – | – | – | – | – |
| | Design Load | | kW | 3.6 | 5.5 | 6.1 | 7.1 | 9.5 | 9.5 | 12.1 | 12.1 | 13.4 | 13.4 |
| | Annual Electricity Consumption*2 | | kWh/a | 170 | 285 | 320 | 331 | 474 | 474 | – | – | – | – |
| | SEER | | | 7.4 | 6.7 | 6.6 | 7.5 | 7.0 | 7.0 | – | – | – | – |
| | | Energy Efficiency Class | | A++ | A++ | A++ | A++ | A++ | A++ | – | – | – | – |
| Heating (Average Season) | Capacity | Rated | kW | 4.1 | 6.0 | 7.0 | 8.0 | 11.2 | 11.2 | 13.5 | 13.5 | 15.0 | 15.0 |
| | | Min - Max | kW | 1.0 - 5.0 | 1.5 - 7.2 | 1.6 - 8.0 | 2.0 - 10.2 | 2.8 - 12.5 | 2.8 - 12.5 | 4.1 - 15.0 | 4.1 - 15.0 | 4.2 - 15.8 | 4.2 - 15.8 |
| | Total Input | Rated | kW | 0.97 | 1.73 | 1.84 | 2.21 | 3.01 | 3.01 | 3.63 | 3.63 | 4.39 | 4.39 |
| | COP | | | 4.20 | 3.46 | 3.80 | 3.61 | 3.71 | 3.71 | 3.71 | 3.71 | 3.41 | 3.41 |
| | | EEL Rank | | – | – | – | – | – | – | – | – | – | – |
| | Design Load | | kW | 2.6 | 4.3 | 4.6 | 5.8 | 8.0 | 8.0 | 8.5 | 8.5 | 9.4 | 9.4 |
| | Declared Capacity | at reference design temperature | kW | 2.3 (–10°C) | 3.8 (–10°C) | 4.1 (–10°C) | 5.2 (–10°C) | 6.0 (–10°C) | 6.0 (–10°C) | 8.5 (–10°C) | 8.5 (–10°C) | 9.4 (–10°C) | 9.4 (–10°C) |
| | | at bivalent temperature | kW | 2.3 (–7°C) | 3.8 (–7°C) | 4.1 (–7°C) | 5.2 (–7°C) | 7.0 (–7°C) | 7.0 (–7°C) | 8.5 (–10°C) | 8.5 (–10°C) | 9.4 (–10°C) | 9.4 (–10°C) |
| | | at operation limit temperature | kW | 2.3 (–10°C) | 3.8 (–10°C) | 4.1 (–10°C) | 5.2 (–10°C) | 4.5 (–15°C) | 4.5 (–15°C) | 6.0 (–15°C) | 6.0 (–15°C) | 7.0 (–15°C) | 7.0 (–15°C) |
| | Back Up Heating Capacity | | kW | 0.3 | 0.5 | 0.5 | 0.6 | 2.0 | 2.0 | – | – | – | – |
| | Annual Electricity Consumption*2 | | kWh/a | 774 | 1456 | 1458 | 1796 | 2428 | 2428 | – | – | – | – |
| | SCOP | | | 4.7 | 4.1 | 4.4 | 4.5 | 4.6 | 4.6 | – | – | – | – |
| | | Energy Efficiency Class | | A++ | A+ | A+ | A+ | A++ | A++ | – | – | – | – |
| Operating Current (max) | | | A | 8.7 | 13.7 | 15.0 | 15.1 | 20.5 | 12.0 | 27.2 | 12.2 | 30.7 | 12.2 |
| Indoor Unit | Input | Rated | kW | 0.03 | 0.03 | 0.03 | 0.04 | 0.07 | 0.07 | 0.10 | 0.10 | 0.10 | 0.10 |
| | Operating Current (max) | | A | 0.20 | 0.22 | 0.24 | 0.27 | 0.46 | 0.46 | 0.66 | 0.66 | 0.66 | 0.66 |
| | Dimensions <Panel> | H × W × D | mm | 258 - 840 - 840 <40 - 950 - 950> | | | | 298 - 840 - 840 <40 - 950 - 950> | | | | | |
| | Weight <Panel> | | kg | 19 <5> | 19 <5> | 21 <5> | 21 <5> | 24 <5> | 24 <5> | 26 <5> | 26 <5> | 26 <5> | 26 <5> |
| | Air Volume [Lo-Mi2-Mi1-Hi] | | m³/min | 11-13-15-16 | 12-14-16-18 | 12-14-16-18 | 14-17-19-21 | 19-23-26-29 | 19-23-26-29 | 21-25-28-31 | 21-25-28-31 | 24-26-29-32 | 24-26-29-32 |
| | Sound Level (SPL) [Lo-Mi2-Mi1-Hi] | | dB(A) | 26-28-29-31 | 27-29-31-32 | 27-29-31-32 | 28-30-32-34 | 31-34-37-40 | 31-34-37-40 | 33-37-41-44 | 33-37-41-44 | 36-39-42-44 | 36-39-42-44 |
| | Sound Level (PWL) | | dB(A) | 51 | 54 | 54 | 56 | 61 | 61 | 65 | 65 | 65 | 65 |
| Outdoor Unit | Dimensions | H × W × D | mm | 550-800-285 | 714-800-285 | 880-840-330 | | 981-1050-330 (+40) | | | | | |
| | Weight | | kg | 35 | 41 | 54 | 55 | 76 | 78 | 84 | 85 | 84 | 85 |
| | Air Volume | Cooling | m³/min | 34.3 | 45.8 | 50.1 | 50.1 | 79.0 | 79.0 | 86.0 | 86.0 | 86.0 | 86.0 |
| | | Heating | m³/min | 32.7 | 43.7 | 50.1 | 50.1 | 79.0 | 79.0 | 92.0 | 92.0 | 92.0 | 92.0 |
| | Sound Level (SPL) | Cooling | dB(A) | 48 | 48 | 49 | 49 | 51 | 51 | 54 | 54 | 55 | 55 |
| | | Heating | dB(A) | 48 | 49 | 51 | 51 | 54 | 54 | 56 | 56 | 57 | 57 |
| | Sound Level (PWL) | Cooling | dB(A) | 59 | 64 | 65 | 66 | 70 | 70 | 72 | 72 | 73 | 73 |
| | Operating Current (max) | | A | 8.5 | 13.5 | 14.8 | 14.8 | 20.0 | 11.5 | 26.5 | 11.5 | 30.0 | 11.5 |
| | Breaker Size | | A | 10 | 20 | 20 | 20 | 32 | 16 | 32 | 16 | 40 | 16 |
| Ext. Piping | Diameter | Liquid / Gas | mm | 6.35 / 9.52 | 6.35 / 12.7 | 6.35 / 15.88 | 9.52 / 15.88 | 9.52 / 15.88 | 9.52 / 15.88 | 9.52 / 15.88 | 9.52 / 15.88 | 9.52 / 15.88 | 9.52 / 15.88 |
| | Max. Length | Out-In | m | 20 | 30 | 30 | 30 | 55 | 55 | 65 | 65 | 65 | 65 |
| | Max. Height | Out-In | m | 12 | 30 | 30 | 30 | 30 | 30 | 30 | 30 | 30 | 30 |
| Guaranteed Operating Range [Outdoor] | | Cooling*3 | °C | –10 ~ +46 | –15 ~ +46 | –15 ~ +46 | –15 ~ +46 | –15 ~ +46 | –15 ~ +46 | –15 ~ +46 | –15 ~ +46 | –15 ~ +46 | –15 ~ +46 |
| | | Heating | °C | –10 ~ +24 | –10 ~ +24 | –10 ~ +24 | –10 ~ +24 | –15 ~ +21 | –15 ~ +21 | –15 ~ +21 | –15 ~ +21 | –15 ~ +21 | –15 ~ +21 |

*1 Refrigerant leakage contributes to climate change. Refrigerant with lower global warming potential (GWP) would contribute less to global warming than a refrigerant with higher GWP, if leaked to the atmosphere. This appliance contains a refrigerant fluid with a GWP equal to 550. This means that if 1 kg of this refrigerant fluid would be leaked to the atmosphere, the impact on global warming would be 550 times higher than 1 kg of $CO_2$, over a period of 100 years. Never try to interfere with the refrigerant circuit yourself or disassemble the product yourself and always ask a professional. The GWP of R32 is 675 in the IPCC 4th Assessment Report.
*2 Energy consumption based on standard test results. Actual energy consumption will depend on how the appliance is used and where it is located.
*3 Optional air protection guide is required where ambient temperature is lower than –5°C.

# PLA-M SERIES
POWER INVERTER

i see Sensor (Optional) | Demand Control (Optional) | Pure White | AUTO VANE | Fresh-air Intake | High-efficiency (Optional) | Long Life | Check! | SWING | High Ceiling | Low Ceiling | AUTO | ACO | Auto Restart | Low Temp Cooling

Silent | Ampere Limit (60-140V/200/250) | Rotation Back-up (Optional) | (Optional) | Group Control | M-NET connection (Optional) | COMPO | Wi-Fi Interface (Optional) | Cleaning-free pipe reuse | Wiring Reuse (Optional) | Drain Lift Up | Pump Down | Flare connection | Self Diagnosis | Failure Recall

| Type | | | | Inverter Heat Pump | | | | | | | | | |
|---|---|---|---|---|---|---|---|---|---|---|---|---|---|
| Indoor Unit | | | | PLA-M35EA | PLA-M50EA | PLA-M60EA | PLA-M71EA | PLA-M100EA | | PLA-M125EA | | PLA-M140EA | |
| Outdoor Unit | | | | PUZ-ZM35VKA | PUZ-ZM50VKA | PUZ-ZM60VHA | PUZ-ZM71VHA | PUZ-ZM100VKA | PUZ-ZM100YKA | PUZ-ZM125VKA | PUZ-ZM125YKA | PUZ-ZM140VKA | PUZ-ZM140YKA |
| Refrigerant | | | | R32*1 | | | | | | | | | |
| Power Supply | Source | | | Outdoor power supply | | | | | | | | | |
| | Outdoor (V/Phase/Hz) | | | VKA・VHA:230 / Single / 50, YKA:400 / Three / 50 | | | | | | | | | |
| Cooling | Capacity | Rated | kW | 3.6 | 5.0 | 6.1 | 7.1 | 9.5 | 9.5 | 12.5 | 12.5 | 13.4 | 13.4 |
| | | Min - Max | kW | 1.6 - 4.5 | 2.3 - 5.6 | 2.7 - 6.5 | 3.3 - 8.1 | 4.9 - 11.4 | 4.9 - 11.4 | 5.5 - 14.0 | 5.5 - 14.0 | 6.2 - 15.0 | 6.2 - 15.0 |
| | Total Input | Rated | kW | 0.751 | 1.175 | 1.523 | 1.716 | 2.084 | 2.084 | 3.399 | 3.399 | 3.746 | 3.746 |
| | EER | | | 4.79 | 4.25 | 4.00 | 4.14 | 4.56 | 4.56 | 3.68 | 3.68 | 3.58 | 3.58 |
| | | EEL Rank | | – | – | – | – | – | – | – | – | – | – |
| | Design Load | | kW | 3.6 | 5.0 | 6.1 | 7.1 | 9.5 | 9.5 | – | – | – | – |
| | Annual Electricity Consumption*2 | | kWh/a | 172 | 234 | 299 | 332 | 435 | 446 | – | – | – | – |
| | SEER | | | 7.3 | 7.4 | 7.1 | 7.4 | 7.6 | 7.4 | – | – | – | – |
| | | Energy Efficiency Class | | A++ | A++ | A++ | A++ | A++ | A++ | – | – | – | – |
| Heating (Average Season) | Capacity | Rated | kW | 4.1 | 6.0 | 7.0 | 8.0 | 11.2 | 11.2 | 14.0 | 14.0 | 16.0 | 16.0 |
| | | Min - Max | kW | 1.6 - 5.2 | 2.5 - 7.3 | 2.8 - 8.2 | 3.5 - 10.2 | 4.5 - 14.0 | 4.5 - 14.0 | 5.0 - 16.0 | 5.0 - 16.0 | 5.7 - 18.0 | 5.7 - 18.0 |
| | Total Input | Rated | kW | 0.890 | 1.581 | 1.863 | 2.014 | 2.685 | 2.685 | 3.773 | 3.773 | 4.365 | 4.365 |
| | COP | | | 4.61 | 3.79 | 3.76 | 3.97 | 4.17 | 4.17 | 3.71 | 3.71 | 3.67 | 3.67 |
| | | EEL Rank | | – | – | – | – | – | – | – | – | – | – |
| | Design Load | | kW | 2.5 | 3.8 | 4.4 | 4.7 | 7.8 | 7.8 | – | – | – | – |
| | Declared Capacity | at reference design temperature | kW | 2.5 (–10°C) | 3.8 (–10°C) | 4.4 (–10°C) | 4.7 (–10°C) | 7.8 (–10°C) | 7.8 (–10°C) | – | – | – | – |
| | | at bivalent temperature | kW | 2.5 (–10°C) | 3.8 (–10°C) | 4.4 (–10°C) | 4.7 (–10°C) | 7.8 (–10°C) | 7.8 (–10°C) | – | – | – | – |
| | | at operation limit temperature | kW | 2.1 (–11°C) | 3.7 (–11°C) | 2.8 (–20°C) | 3.5 (–20°C) | 5.8 (–20°C) | 5.8 (–20°C) | – | – | – | – |
| | Back Up Heating Capacity | | kW | 0 | 0 | 0 | 0 | 0 | 0 | – | – | – | – |
| | Annual Electricity Consumption*2 | | kWh/a | 797 | 1184 | 1420 | 1432 | 2521 | 2521 | – | – | – | – |
| | SCOP | | | 4.3 | 4.4 | 4.3 | 4.6 | 4.3 | 4.3 | – | – | – | – |
| | | Energy Efficiency Class | | A+ | A+ | A+ | A++ | A+ | A+ | – | – | – | – |
| Operating Current (max) | | | A | 13.2 | 13.2 | 19.2 | 19.3 | 27.0 | 8.5 | 27.2 | 10.2 | 28.7 | 13.7 |
| Indoor Unit | Input | Rated | kW | 0.03 | 0.03 | 0.03 | 0.04 | 0.07 | 0.07 | 0.10 | 0.10 | 0.10 | 0.10 |
| | Operating Current (max) | | A | 0.20 | 0.22 | 0.24 | 0.27 | 0.46 | 0.46 | 0.66 | 0.66 | 0.66 | 0.66 |
| | Dimensions <Panel> | H × W × D | mm | 258 - 840 - 840 <40 - 950 - 950> | | | 298 - 840 - 840 <40 - 950 - 950> | | | | | | |
| | Weight <Panel> | | kg | 19 <5> | 19 <5> | 21 <5> | 21 <5> | 24 <5> | 24 <5> | 26 <5> | 26 <5> | 26 <5> | 26 <5> |
| | Air Volume [Lo-Mi2-Mi1-Hi] | | m³/min | 11-13-15-16 | 12-14-16-18 | 12-14-16-18 | 14-17-19-21 | 19-23-26-29 | 19-23-26-29 | 21-25-28-31 | 21-25-28-31 | 24-26-29-32 | 24-26-29-32 |
| | Sound Level (SPL) [Lo-Mi2-Mi1-Hi] | | dB(A) | 26-28-29-31 | 27-29-31-32 | 27-29-31-32 | 28-30-32-34 | 31-34-37-40 | 31-34-37-40 | 33-37-41-44 | 33-37-41-44 | 36-39-42-44 | 36-39-42-44 |
| | Sound Level (PWL) | | dB(A) | 51 | 54 | 54 | 56 | 61 | 61 | 65 | 65 | 65 | 65 |
| Outdoor Unit | Dimensions | H × W × D | mm | 630 - 809 - 300 | | 943 - 950 - 330 (+25) | | 1,338 - 1,050 - 330 (+40) | | | | | |
| | Weight | | kg | 46 | 46 | 70 | 70 | 116 | 123 | 116 | 125 | 118 | 131 |
| | Air Volume | Cooling | m³/min | 45 | 45 | 55 | 55 | 110 | 110 | 120 | 120 | 120 | 120 |
| | | Heating | m³/min | 45 | 45 | 55 | 55 | 110 | 110 | 120 | 120 | 120 | 120 |
| | Sound Level (SPL) | Cooling | dB(A) | 44 | 44 | 47 | 47 | 49 | 49 | 50 | 50 | 50 | 50 |
| | | Heating | dB(A) | 46 | 46 | 49 | 49 | 51 | 51 | 52 | 52 | 52 | 52 |
| | Sound Level (PWL) | Cooling | dB(A) | 65 | 65 | 67 | 67 | 69 | 69 | 70 | 70 | 70 | 70 |
| | Operating Current (max) | | A | 13.0 | 13.0 | 19.0 | 19.0 | 26.5 | 8.0 | 26.5 | 9.5 | 28.0 | 13.0 |
| | Breaker Size | | A | 16 | 16 | 25 | 25 | 32 | 16 | 32 | 16 | 40 | 16 |
| Ext. Piping | Diameter | Liquid / Gas | mm | 6.35 / 12.7 | | 9.52 / 15.88 | 9.52 / 15.88 | 9.52 / 15.88 | 9.52 / 15.88 | 9.52 / 15.88 | 9.52 / 15.88 | 9.52 / 15.88 | 9.52 / 15.88 |
| | Max. Length | Out-In | m | 50 | 50 | 55 | 55 | 100 | 100 | 100 | 100 | 100 | 100 |
| | Max. Height | Out-In | m | 30 | 30 | 30 | 30 | 30 | 30 | 30 | 30 | 30 | 30 |
| Guaranteed Operating Range [Outdoor] | | Cooling*3 | °C | –15 ~ +46 | –15 ~ +46 | –15 ~ +46 | –15 ~ +46 | –15 ~ +46 | –15 ~ +46 | –15 ~ +46 | –15 ~ +46 | –15 ~ +46 | –15 ~ +46 |
| | | Heating | °C | –11 ~ +21 | –11 ~ +21 | –20 ~ +21 | –20 ~ +21 | –20 ~ +21 | –20 ~ +21 | –20 ~ +21 | –20 ~ +21 | –20 ~ +21 | –20 ~ +21 |

*1 Refrigerant leakage contributes to climate change. Refrigerant with lower global warming potential (GWP) would contribute less to global warming than a refrigerant with higher GWP, if leaked to the atmosphere. This appliance contains a refrigerant fluid with a GWP equal to 550. This means that if 1 kg of this refrigerant fluid would be leaked to the atmosphere, the impact on global warming would be 550 times higher than 1 kg of $CO_2$, over a period of 100 years. Never try to interfere with the refrigerant circuit yourself or disassemble the product yourself and always ask a professional. The GWP of R32 is 675 in the IPCC 4th Assessment Report.
*2 Energy consumption based on standard test results. Actual energy consumption will depend on how the appliance is used and where it is located.
*3 Optional air protection guide is required where ambient temperature is lower than –5°C.

# SERIES SELECTION

## Power Inverter Series

### Indoor Unit

R32

R410A

**Panel** PLA-ZM35/50/60/71/100/125/140EA

| Panel | With Signal Receiver | With 3D i-see Sensor | With Wireless Remote Controller | With Auto Elevation |
|---|---|---|---|---|
| PLP-6EA | | | | |
| PLP-6EAL | ✓ | | | |
| PLP-6EAE | | ✓ | | |
| PLP-6EALE | ✓ | ✓ | | |
| PLP-6EAJ | ✓ | | | ✓ |
| PLP-6EAJE | ✓ | ✓ | | ✓ |
| PLP-6EALM | ✓ | | ✓ | |
| PLP-6EALME | ✓ | ✓ | ✓ | |

### Outdoor Unit

R410A

For Single

PUHZ-ZRP35/50

PUHZ-ZRP60/71

PUHZ-ZRP100/125/140

R410A

For Multi
(Twin/Triple/Quadruple)

PUHZ-ZRP71

PUHZ-ZRP100/125/140/200/250

### Remote Controller

Optional

Optional

Optional

✻ Enclosed in PLP-6EALM/PLP-6EALME

## Standard Inverter Series

### Indoor Unit

R410A

**Panel** PLA-M35/50/60/71/100/125/140EA

| Panel | With Signal Receiver | With 3D i-see Sensor | With Wireless Remote Controller | With Auto Elevation |
|---|---|---|---|---|
| PLP-6EA | | | | |
| PLP-6EAL | ✓ | | | |
| PLP-6EAE | | ✓ | | |
| PLP-6EALE | ✓ | ✓ | | |
| PLP-6EAJ | ✓ | | | ✓ |
| PLP-6EAJE | ✓ | ✓ | | ✓ |
| PLP-6EALM | ✓ | | ✓ | |
| PLP-6EALME | ✓ | ✓ | ✓ | |

### Outdoor Unit

R410A

For Single

SUZ-KA35

SUZ-KA50/60/71

PUHZ-P100/125/140

R410A

For Multi
(Twin/Triple/Quadruple)

PUHZ-P100/125/140

PUHZ-P200/250

### Remote Controller

Optional

Optional

Optional

✻ Enclosed in PLP-6EALM/PLP-6EALME

## PLA-ZM/RP EA Indoor Unit Combinations

Indoor unit combinations shown below are possible.

| Indoor Unit Combination | | Outdoor Unit Capacity | | | | | | | | | | | | | | | | | | | |
|---|---|---|---|---|---|---|---|---|---|---|---|---|---|---|---|---|---|---|---|---|---|
| | | For Single | | | | | | | | | For Twin | | | | | | For Triple | | | For Quadruple | |
| | | 35 | 50 | 60 | 71 | 100 | 125 | 140 | 200 | 250 | 71 | 100 | 125 | 140 | 200 | 250 | 140 | 200 | 250 | 200 | 250 |
| Power Inverter (PUHZ-ZRP) | | 35x1 | 50x1 | 60x1 | 71x1 | 100x1 | 125x1 | 140x1 | – | – | 35x2 | 50x2 | 60x2 | 71x2 | 100x2 | 125x2 | 50x3 | 60x3 | 71x3 | 50x4 | 60x4 |
| | Distribution Pipe | – | – | – | – | – | – | – | – | – | MSDD-50TR-E | | | | MSDD-50WR-E | | MSDT-111R-E | | | MSDF-1111R-E | |
| Standard Inverter (SUZ & PUHZ-P) | | 35x1 | 50x1 | 60x1 | 71x1 | 100x1 | 125x1 | 140x1 | – | – | – | 50x2 | 60x2 | 71x2 | 100x2 | 125x2 | 50x3 | 60x3 | 71x3 | 50x4 | 60x4 |
| | Distribution Pipe | – | – | – | – | – | – | – | – | – | – | MSDD-50TR-E | | | MSDD-50WR-E | | MSDT-111R-E | | | MSDF-1111R-E | |

# PLA-ZM SERIES

POWER INVERTER

| Type | | | | Inverter Heat Pump | | | | | | | | | |
|---|---|---|---|---|---|---|---|---|---|---|---|---|---|
| Indoor Unit | | | | PLA-ZM35EA | PLA-ZM50EA | PLA-ZM60EA | PLA-ZM71EA | PLA-ZM100EA | | PLA-ZM125EA | | PLA-ZM140EA | |
| Outdoor Unit | | | | PUHZ-ZRP35VKA2 | PUHZ-ZRP50VKA2 | PUHZ-ZRP60VHA2 | PUHZ-ZRP71VHA2 | PUHZ-ZRP100VKA3 | PUHZ-ZRP100YKA3 | PUHZ-ZRP125VKA3 | PUHZ-ZRP125YKA3 | PUHZ-ZRP140VKA3 | PUHZ-ZRP140YKA3 |
| Refrigerant | | | | R410A*1 | | | | | | | | | |
| Power Supply | Source | | | Outdoor power supply | | | | | | | | | |
| | Outdoor (V/Phase/Hz) | | | VKA・VHA:230 / Single / 50, YKA:400 / Three / 50 | | | | | | | | | |
| Cooling | Capacity | Rated | kW | 3.6 | 5.0 | 6.1 | 7.1 | 9.5 | 9.5 | 12.5 | 12.5 | 13.4 | 13.4 |
| | | Min - Max | kW | 1.6 - 4.5 | 2.3 - 5.6 | 2.7 - 6.5 | 3.3 - 8.1 | 4.9 - 11.4 | 4.9 - 11.4 | 5.5 - 14.0 | 5.5 - 14.0 | 6.2 - 15.0 | 6.2 - 15.0 |
| | Total Input | Rated | kW | 0.78 | 1.33 | 1.66 | 1.79 | 2.20 | 2.20 | 3.84 | 3.84 | 4.36 | 4.36 |
| | EER | | | – | – | – | – | – | – | 3.25 | 3.25 | 3.07 | 3.07 |
| | | EEL Rank | | – | – | – | – | – | – | – | – | – | – |
| | Design Load | | kW | 3.6 | 5.0 | 6.1 | 7.1 | 9.5 | 9.5 | – | – | – | – |
| | Annual Electricity Consumption*2 | | kWh/a | 170 | 253 | 318 | 336 | 461 | 472 | – | – | – | – |
| | SEER | | | 7.4 | 6.9 | 6.7 | 7.4 | 7.2 | 7.0 | – | – | – | – |
| | | Energy Efficiency Class | | A++ | A++ | A++ | A++ | A++ | A++ | – | – | – | – |
| Heating (Average Season) | Capacity | Rated | kW | 4.1 | 6.0 | 7.0 | 8.0 | 11.2 | 11.2 | 14.0 | 14.0 | 16.0 | 16.0 |
| | | Min - Max | kW | 1.6 - 5.2 | 2.5 - 7.3 | 2.8 - 8.2 | 3.5 - 10.2 | 4.5 - 14.0 | 4.5 - 14.0 | 5.0 - 16.0 | 5.0 - 16.0 | 5.7 - 18.0 | 5.7 - 18.0 |
| | Total Input | Rated | kW | 0.85 | 1.55 | 1.89 | 1.90 | 2.60 | 2.60 | 3.67 | 3.67 | 4.84 | 4.84 |
| | COP | | | – | – | – | – | – | – | 3.81 | 3.81 | 3.30 | 3.30 |
| | | EEL Rank | | – | – | – | – | – | – | – | – | – | – |
| | Design Load | | kW | 2.5 | 3.8 | 4.4 | 4.7 | 7.8 | 7.8 | – | – | – | – |
| | Declared Capacity | at reference design temperature | kW | 2.5 (–10°C) | 3.8 (–10°C) | 4.4 (–10°C) | 4.7 (–10°C) | 7.8 (–10°C) | 7.8 (–10°C) | – | – | – | – |
| | | at bivalent temperature | kW | 2.5 (–10°C) | 3.8 (–10°C) | 4.4 (–10°C) | 4.7 (–10°C) | 7.8 (–10°C) | 7.8 (–10°C) | – | – | – | – |
| | | at operation limit temperature | kW | 2.1 (–11°C) | 3.7 (–11°C) | 2.8 (–20°C) | 3.5 (–20°C) | 5.8 (–20°C) | 5.8 (–20°C) | – | – | – | – |
| | Back Up Heating Capacity | | kW | 0 | 0 | 0 | 0 | 0 | 0 | – | – | – | – |
| | Annual Electricity Consumption*2 | | kWh/a | 714 | 1109 | 1337 | 1342 | 2229 | 2229 | – | – | – | – |
| | SCOP | | | 4.9 | 4.8 | 4.6 | 4.9 | 4.9 | 4.9 | – | – | – | – |
| | | Energy Efficiency Class | | A++ | A++ | A++ | A++ | A++ | A++ | – | – | – | – |
| Operating Current (max) | | | A | 13.2 | 13.2 | 19.2 | 19.3 | 27.0 | 8.5 | 27.0 | 10.0 | 28.7 | 13.7 |
| Indoor Unit | Input | Rated | kW | 0.03 | 0.03 | 0.03 | 0.05 | 0.07 | 0.07 | 0.08 | 0.08 | 0.10 | 0.10 |
| | Operating Current (max) | | A | 0.21 | 0.22 | 0.22 | 0.34 | 0.47 | 0.47 | 0.52 | 0.52 | 0.66 | 0.66 |
| | Dimensions <Panel> | H × W × D | mm | 258 - 840 - 840 <40 - 950 - 950> | | | 298 - 840 - 840 <40 - 950 - 950> | | | | | | |
| | Weight <Panel> | | kg | 21 <5> | | | 24 <5> | 26 <5> | 26 <5> | 26 <5> | 26 <5> | 26 <5> | 26 <5> |
| | Air Volume [Lo-Mi2-Mi1-Hi] | | $m^3$/min | 11-13-15-16 | 12-14-16-18 | 12-14-16-18 | 17-19-21-23 | 19-22-25-28 | 19-22-25-28 | 21-24-26-29 | 21-24-26-29 | 24-26-29-32 | 24-26-29-32 |
| | Sound Level (SPL) [Lo-Mi2-Mi1-Hi] | | dB(A) | 26-28-29-31 | 27-29-31-32 | 27-29-31-32 | 28-30-33-36 | 31-34-37-40 | 31-34-37-40 | 33-36-39-41 | 33-36-39-41 | 36-39-42-44 | 36-39-42-44 |
| | Sound Level (PWL) | | dB(A) | 51 | 54 | 54 | 57 | 61 | 61 | 62 | 62 | 65 | 65 |
| Outdoor Unit | Dimensions | H × W × D | mm | 630 - 809 - 300 | | 943 - 950 - 330 (+30) | | 1338 - 1050 - 330 (+40) | | | | | |
| | Weight | | kg | 43 | 46 | 70 | 70 | 116 | 123 | 116 | 125 | 118 | 131 |
| | Air Volume | Cooling | $m^3$/min | 45 | 45 | 55 | 55 | 110 | 110 | 120 | 120 | 120 | 120 |
| | | Heating | $m^3$/min | 45 | 45 | 55 | 55 | 110 | 110 | 120 | 120 | 120 | 120 |
| | Sound Level (SPL) | Cooling | dB(A) | 44 | 44 | 47 | 47 | 49 | 49 | 50 | 50 | 50 | 50 |
| | | Heating | dB(A) | 46 | 46 | 48 | 48 | 51 | 51 | 52 | 52 | 52 | 52 |
| | Sound Level (PWL) | Cooling | dB(A) | 65 | 65 | 67 | 67 | 69 | 69 | 70 | 70 | 70 | 70 |
| | Operating Current (max) | | A | 13.0 | 13.0 | 19.0 | 19.0 | 26.5 | 8.0 | 26.5 | 9.5 | 28.0 | 13.0 |
| | Breaker Size | | A | 16 | 16 | 25 | 25 | 32 | 16 | 32 | 16 | 40 | 16 |
| Ext. Piping | Diameter | Liquid / Gas | mm | 6.35 / 12.7 | 6.35 / 12.7 | 9.52 / 15.88 | 9.52 / 15.88 | 9.52 / 15.88 | 9.52 / 15.88 | 9.52 / 15.88 | 9.52 / 15.88 | 9.52 / 15.88 | 9.52 / 15.88 |
| | Max. Length | Out-In | m | 50 | 50 | 50 | 50 | 75 | 75 | 75 | 75 | 75 | 75 |
| | Max. Height | Out-In | m | 30 | 30 | 30 | 30 | 30 | 30 | 30 | 30 | 30 | 30 |
| Guaranteed Operating Range [Outdoor] | | Cooling*3 | °C | –15 ~ +46 | –15 ~ +46 | –15 ~ +46 | –15 ~ +46 | –15 ~ +46 | –15 ~ +46 | –15 ~ +46 | –15 ~ +46 | –15 ~ +46 | –15 ~ +46 |
| | | Heating | °C | –11 ~ +21 | –11 ~ +21 | –20 ~ +21 | –20 ~ +21 | –20 ~ +21 | –20 ~ +21 | –20 ~ +21 | –20 ~ +21 | –20 ~ +21 | –20 ~ +21 |

*1 Refrigerant leakage contributes to climate change. Refrigerant with lower global warming potential (GWP) would contribute less to global warming than a refrigerant with higher GWP, if leaked to the atmosphere. This appliance contains a refrigerant fluid with a GWP equal to 1975. This means that if 1 kg of this refrigerant fluid would be leaked to the atmosphere, the impact on global warming would be 1975 times higher than 1 kg of $CO_2$, over a period of 100 years. Never try to interfere with the refrigerant circuit yourself or disassemble the product yourself and always ask a professional. The GWP of R410A is 2088 in the IPCC 4th Assessment Report.
*2 Energy consumption based on standard test results. Actual energy consumption will depend on how the appliance is used and where it is located.
*3 Optional air protection guide is required where ambient temperature is lower than –5°C.

# PLA-M SERIES

STANDARD INVERTER

| Type | | | | Inverter Heat Pump | | | | | | | | | |
|---|---|---|---|---|---|---|---|---|---|---|---|---|---|
| Indoor Unit | | | | PLA-M35EA | PLA-M50EA | PLA-M60EA | PLA-M71EA | PLA-M100EA | | PLA-M125EA | | PLA-M140EA | |
| Outdoor Unit | | | | SUZ-KA35VA6 | SUZ-KA50VA6 | SUZ-KA60VA6 | SUZ-KA71VA6 | PUHZ-P100VKA | PUHZ-P100YKA | PUHZ-P125VKA | PUHZ-P125YKA | PUHZ-P140VKA | PUHZ-P140YKA |
| Refrigerant | | | | R410A*1 | | | | | | | | | |
| Power Supply | Source | | | Outdoor power supply | | | | | | | | | |
| | Outdoor (V/Phase/Hz) | | | VA・VKA:230 / Single / 50, YKA:400 / Three / 50 | | | | | | | | | |
| Cooling | Capacity | Rated | kW | 3.6 | 5.5 | 5.7 | 7.1 | 9.4 | 9.4 | 12.1 | 12.1 | 13.6 | 13.6 |
| | | Min - Max | kW | 1.4 - 3.9 | 2.3 - 5.6 | 2.3 - 6.3 | 2.8 - 8.1 | 3.7 - 10.6 | 3.7 - 10.6 | 5.6 - 13.0 | 5.6 - 13.0 | 5.8 - 14.1 | 5.8 - 14.1 |
| | Total Input | Rated | kW | 1.02 | 1.61 | 1.76 | 2.10 | 3.18 | 3.18 | 4.10 | 4.10 | 5.41 | 5.41 |
| | EER | | | – | – | – | – | 2.95 | 2.95 | 2.95 | 2.95 | 2.51 | 2.51 |
| | | EEL Rank | | – | – | – | – | – | – | – | – | – | – |
| | Design Load | | kW | 3.6 | 5.5 | 5.7 | 7.1 | 9.4 | 9.4 | – | – | – | – |
| | Annual Electricity Consumption*2 | | kWh/a | 181 | 295 | 307 | 400 | 538 | 538 | – | – | – | – |
| | SEER | | | 6.9 | 6.5 | 6.5 | 6.2 | 6.1 | 6.1 | – | – | – | – |
| | | Energy Efficiency Class | | A++ | A++ | A++ | A++ | A++ | A++ | – | – | – | – |
| Heating (Average Season) | Capacity | Rated | kW | 4.1 | 5.8 | 6.9 | 8.0 | 11.2 | 11.2 | 13.5 | 13.5 | 15.0 | 15.0 |
| | | Min - Max | kW | 1.7 - 5.0 | 1.7 - 7.2 | 2.5 - 8.0 | 2.6 - 10.2 | 2.8 - 12.5 | 2.8 - 12.5 | 4.8 - 15.0 | 4.8 - 15.0 | 4.9 - 15.8 | 4.9 - 15.8 |
| | Total Input | Rated | kW | 1.00 | 1.69 | 1.97 | 2.24 | 3.26 | 3.26 | 3.84 | 3.84 | 4.67 | 4.67 |
| | COP | | | – | – | – | – | 3.43 | 3.43 | 3.51 | 3.51 | 3.21 | 3.21 |
| | | EEL Rank | | – | – | – | – | – | – | – | – | – | – |
| | Design Load | | kW | 2.6 | 4.3 | 4.6 | 5.8 | 8.0 | 8.0 | – | – | – | – |
| | Declared Capacity | at reference design temperature | kW | 2.3 (–10°C) | 3.8 (–10°C) | 4.0 (–10°C) | 4.7 (–10°C) | 6.0 (–10°C) | 6.0 (–10°C) | – | – | – | – |
| | | at bivalent temperature | kW | 2.3 (–7°C) | 3.8 (–7°C) | 4.1 (–7°C) | 5.1 (–7°C) | 7.0 (–7°C) | 7.0 (–7°C) | – | – | – | – |
| | | at operation limit temperature | kW | 2.3 (–10°C) | 3.8 (–10°C) | 4.0 (–10°C) | 4.7 (–10°C) | 4.5 (–15°C) | 4.5 (–15°C) | – | – | – | – |
| | Back Up Heating Capacity | | kW | 0.3 | 0.5 | 0.6 | 1.1 | 2.0 | 2.0 | – | – | – | – |
| | Annual Electricity Consumption*2 | | kWh/a | 826 | 1505 | 1498 | 1888 | 2432 | 2432 | – | – | – | – |
| | SCOP | | | 4.4 | 4.0 | 4.3 | 4.3 | 4.6 | 4.6 | – | – | – | – |
| | | Energy Efficiency Class | | A+ | A+ | A+ | A+ | A++ | A++ | – | – | – | – |
| Operating Current (max) | | | A | 8.4 | 12.2 | 14.2 | 16.4 | 20.5 | 12.0 | 27.2 | 12.2 | 30.7 | 12.2 |
| Indoor Unit | Input | Rated | kW | 0.03 | 0.03 | 0.03 | 0.04 | 0.07 | 0.07 | 0.10 | 0.10 | 0.10 | 0.10 |
| | Operating Current (max) | | A | 0.20 | 0.22 | 0.24 | 0.27 | 0.46 | 0.46 | 0.66 | 0.66 | 0.66 | 0.66 |
| | Dimensions <Panel> | H × W × D | mm | 258 - 840 - 840 <40 - 950 - 950> | | | | 298 - 840 - 840 <40 - 950 - 950> | | | | | |
| | Weight <Panel> | | kg | 19 <5> | 19 <5> | 21 <5> | 21 <5> | 24 <5> | 24 <5> | 26 <5> | 26 <5> | 26 <5> | 26 <5> |
| | Air Volume [Lo-Mi2-Mi1-Hi] | | $m^3$/min | 11-13-15-16 | 12-14-16-18 | 12-14-16-18 | 14-17-19-21 | 19-23-26-29 | 19-23-26-29 | 21-25-28-31 | 21-25-28-31 | 24-26-29-32 | 24-26-29-32 |
| | Sound Level (SPL) [Lo-Mi2-Mi1-Hi] | | dB(A) | 26-28-29-31 | 27-29-31-32 | 27-29-31-32 | 28-30-32-34 | 31-34-37-40 | 31-34-37-40 | 33-37-41-44 | 33-37-41-44 | 36-39-42-44 | 36-39-42-44 |
| | Sound Level (PWL) | | dB(A) | 51 | 54 | 54 | 56 | 61 | 61 | 65 | 65 | 65 | 65 |
| Outdoor Unit | Dimensions | H × W × D | mm | 550 - 800 - 285 | | 880 - 840 - 330 | | 981 - 1050 - 330 | | | | | |
| | Weight | | kg | 35 | 54 | 50 | 53 | 76 | 78 | 84 | 85 | 84 | 85 |
| | Air Volume | Cooling | $m^3$/min | 36.3 | 44.6 | 40.9 | 50.1 | 79 | 79 | 86 | 86 | 86 | 86 |
| | | Heating | $m^3$/min | 34.8 | 44.6 | 49.2 | 48.2 | 79 | 79 | 92 | 92 | 92 | 92 |
| | Sound Level (SPL) | Cooling | dB(A) | 49 | 52 | 55 | 55 | 51 | 51 | 54 | 54 | 56 | 56 |
| | | Heating | dB(A) | 50 | 52 | 55 | 55 | 54 | 54 | 56 | 56 | 57 | 57 |
| | Sound Level (PWL) | Cooling | dB(A) | 62 | 65 | 65 | 69 | 70 | 70 | 72 | 72 | 75 | 75 |
| | Operating Current (max) | | A | 8.2 | 12.0 | 14.0 | 16.1 | 20 | 11.5 | 26.5 | 11.5 | 30.0 | 11.5 |
| | Breaker Size | | A | 10 | 20 | 20 | 20 | 32 | 16 | 32 | 16 | 40 | 16 |
| Ext. Piping | Diameter | Liquid / Gas | mm | 6.35 / 9.52 | 6.35 / 12.7 | 6.35 / 15.88 | 9.52 / 15.88 | 9.52 / 15.88 | 9.52 / 15.88 | 9.52 / 15.88 | 9.52 / 15.88 | 9.52 / 15.88 | 9.52 / 15.88 |
| | Max. Length | Out-In | m | 20 | 30 | 30 | 30 | 50 | 50 | 50 | 50 | 50 | 50 |
| | Max. Height | Out-In | m | 12 | 30 | 30 | 30 | 30 | 30 | 30 | 30 | 30 | 30 |
| Guaranteed Operating Range [Outdoor] | | Cooling*3 | °C | –10 ~ +46 | –15 ~ +46 | –15 ~ +46 | –15 ~ +46 | –15 ~ +46 | –15 ~ +46 | –15 ~ +46 | –15 ~ +46 | –15 ~ +46 | –15 ~ +46 |
| | | Heating | °C | –10 ~ +24 | –10 ~ +24 | –10 ~ +24 | –10 ~ +24 | –15 ~ +21 | –15 ~ +21 | –15 ~ +21 | –15 ~ +21 | –15 ~ +21 | –15 ~ +21 |

*1 Refrigerant leakage contributes to climate change. Refrigerant with lower global warming potential (GWP) would contribute less to global warming than a refrigerant with higher GWP, if leaked to the atmosphere. This appliance contains a refrigerant fluid with a GWP equal to 1975. This means that if 1 kg of this refrigerant fluid would be leaked to the atmosphere, the impact on global warming would be 1975 times higher than 1 kg of $CO_2$, over a period of 100 years. Never try to interfere with the refrigerant circuit yourself or disassemble the product yourself and always ask a professional. The GWP of R410A is 2088 in the IPCC 4th Assessment Report.
*2 Energy consumption based on standard test results. Actual energy consumption will depend on how the appliance is used and where it is located.
*3 Optional air protection guide is required where ambient temperature is lower than –5°C.

# PLA-M SERIES
POWER INVERTER

i-see Sensor (Optional) | Demand Control (Optional, 60-140V/200/250) | Pure White | AUTO VANE | Fresh-air Intake | High-efficiency (Optional) | Long Life | Check! | SWING | High Ceiling | Low Ceiling | AUTO | ACO | Auto Restart | Low Temp Cooling

Silent | Ampere Limit | Rotation Back-up (Optional) | (Optional) | Group Control | M-NET connection (Optional) | COMPO | Wi-Fi Interface (Optional) | MXZ connection | Cleaning-free Pipe Rear | Wiring Reuse (Optional) | Drain Lift Up | Pump Down | Flare connection | Self Diagnosis | Failure Recall

| Type | | | | Inverter Heat Pump | | | | | | | | | |
|---|---|---|---|---|---|---|---|---|---|---|---|---|---|
| Indoor Unit | | | | PLA-M35EA | PLA-M50EA | PLA-M60EA | PLA-M71EA | PLA-M100EA | | PLA-M125EA | | PLA-M140EA | |
| Outdoor Unit | | | | PUHZ-ZRP35VKA2 | PUHZ-ZRP50VKA2 | PUHZ-ZRP60VHA2 | PUHZ-ZRP71VHA2 | PUHZ-ZRP100VKA3 | PUHZ-ZRP100YKA3 | PUHZ-ZRP125VKA3 | PUHZ-ZRP125YKA3 | PUHZ-ZRP140VKA3 | PUHZ-ZRP140YKA3 |
| Refrigerant | | | | R410A*1 | | | | | | | | | |
| Power Supply | Source | | | Outdoor power supply | | | | | | | | | |
| | Outdoor (V/Phase/Hz) | | | VKA・VHA:230 / Single / 50, YKA:400 / Three / 50 | | | | | | | | | |
| Cooling | Capacity | Rated | kW | 3.6 | 5.0 | 6.1 | 7.1 | 9.5 | 9.5 | 12.5 | 12.5 | 13.4 | 13.4 |
| | | Min - Max | kW | 1.6 - 4.5 | 2.3 - 5.6 | 2.7 - 6.5 | 3.3 - 8.1 | 4.9 - 11.4 | 4.9 - 11.4 | 5.5 - 14.0 | 5.5 - 14.0 | 6.2 - 15.0 | 6.2 - 15.0 |
| | Total Input | Rated | kW | 0.83 | 1.42 | 1.75 | 1.87 | 2.23 | 2.23 | 3.87 | 3.87 | 4.39 | 4.39 |
| | EER | | | – | – | – | – | – | – | 3.23 | 3.23 | 3.05 | 3.05 |
| | | EEL Rank | | – | – | – | – | – | – | – | – | – | – |
| | Design Load | | kW | 3.6 | 5.0 | 6.1 | 7.1 | 9.5 | 9.5 | – | – | – | – |
| | Annual Electricity Consumption*2 | | kWh/a | 174 | 258 | 321 | 341 | 465 | 476 | – | – | – | – |
| | SEER | | | 7.2 | 6.7 | 6.6 | 7.2 | 7.1 | 6.9 | – | – | – | – |
| | | Energy Efficiency Class | | A++ | A++ | A++ | A++ | A++ | A++ | – | – | – | – |
| Heating (Average Season) | Capacity | Rated | kW | 4.1 | 6.0 | 7.0 | 8.0 | 11.2 | 11.2 | 14.0 | 14.0 | 16.0 | 16.0 |
| | | Min - Max | kW | 1.6 - 5.8 | 2.5 - 7.3 | 2.8 - 8.2 | 3.5 - 10.2 | 4.5 - 14.0 | 4.5 - 14.0 | 5.0 - 16.0 | 5.0 - 16.0 | 5.7 - 18.0 | 5.7 - 18.0 |
| | Total Input | Rated | kW | 0.92 | 1.81 | 2.07 | 2.11 | 2.69 | 2.69 | 3.77 | 3.77 | 4.90 | 4.90 |
| | COP | | | – | – | – | – | – | – | 3.71 | 3.71 | 3.26 | 3.26 |
| | | EEL Rank | | – | – | – | – | – | – | – | – | – | – |
| | Design Load | | kW | 2.5 | 3.8 | 4.4 | 4.7 | 7.8 | 7.8 | – | – | – | – |
| | Declared Capacity | at reference design temperature | kW | 2.5 (–10°C) | 3.8 (–10°C) | 4.4 (–10°C) | 4.7 (–10°C) | 7.8 (–10°C) | 7.8 (–10°C) | – | – | – | – |
| | | at bivalent temperature | kW | 2.5 (–10°C) | 3.8 (–10°C) | 4.4 (–10°C) | 4.7 (–10°C) | 7.8 (–10°C) | 7.8 (–10°C) | – | – | – | – |
| | | at operation limit temperature | kW | 2.1 (–11°C) | 3.7 (–11°C) | 2.8 (–20°C) | 3.5 (–20°C) | 5.8 (–20°C) | 5.8 (–20°C) | – | – | – | – |
| | Back Up Heating Capacity | | kW | 0 | 0 | 0 | 0 | 0 | 0 | – | – | – | – |
| | Annual Electricity Consumption*2 | | kWh/a | 764 | 1212 | 1418 | 1402 | 2468 | 2468 | – | – | – | – |
| | SCOP | | | 4.5 | 4.3 | 4.3 | 4.6 | 4.4 | 4.4 | – | – | – | – |
| | | Energy Efficiency Class | | A+ | A+ | A+ | A++ | A+ | A+ | – | – | – | – |
| Operating Current (max) | | | A | 13.2 | 13.2 | 19.2 | 19.3 | 27.0 | 8.5 | 27.2 | 10.2 | 28.7 | 13.7 |
| Indoor Unit | Input | Rated | kW | 0.03 | 0.03 | 0.03 | 0.04 | 0.07 | 0.07 | 0.10 | 0.10 | 0.10 | 0.10 |
| | Operating Current (max) | | A | 0.20 | 0.22 | 0.24 | 0.27 | 0.46 | 0.46 | 0.66 | 0.66 | 0.66 | 0.66 |
| | Dimensions <Panel> | H x W x D | mm | 258 - 840 - 840 <40 - 950 - 950> | | | | 298 - 840 - 840 <40 - 950 - 950> | | | | | |
| | Weight <Panel> | | kg | 19 <5> | 19 <5> | 21 <5> | 21 <5> | 24 <5> | 24 <5> | 26 <5> | 26 <5> | 26 <5> | 26 <5> |
| | Air Volume [Lo-Mi2-Mi1-Hi] | | $m^3$/min | 11-13-15-16 | 12-14-16-18 | 12-14-16-18 | 14-17-19-21 | 19-23-26-29 | 19-23-26-29 | 21-25-28-31 | 21-25-28-31 | 24-26-29-32 | 24-26-29-32 |
| | Sound Level (SPL) [Lo-Mi2-Mi1-Hi] | | dB(A) | 26-28-29-31 | 27-29-31-32 | 27-29-31-32 | 28-30-32-34 | 31-34-37-40 | 31-34-37-40 | 33-37-41-44 | 33-37-41-44 | 36-39-42-44 | 36-39-42-44 |
| | Sound Level (PWL) | | dB(A) | 51 | 54 | 54 | 56 | 61 | 61 | 65 | 65 | 65 | 65 |
| Outdoor Unit | Dimensions | H x W x D | mm | 630 - 809 - 300 | | 943 - 950 - 330 (+30) | | 1338 - 1050 - 330 (+40) | | | | | |
| | Weight | | kg | 43 | 46 | 70 | 70 | 116 | 123 | 116 | 125 | 118 | 131 |
| | Air Volume | Cooling | $m^3$/min | 45 | 45 | 55 | 55 | 110 | 110 | 120 | 120 | 120 | 120 |
| | | Heating | $m^3$/min | 45 | 45 | 55 | 55 | 110 | 110 | 120 | 120 | 120 | 120 |
| | Sound Level (SPL) | Cooling | dB(A) | 44 | 44 | 47 | 47 | 49 | 49 | 50 | 50 | 50 | 50 |
| | | Heating | dB(A) | 46 | 46 | 48 | 48 | 51 | 51 | 52 | 52 | 52 | 52 |
| | Sound Level (PWL) | Cooling | dB(A) | 65 | 65 | 67 | 67 | 69 | 69 | 70 | 70 | 70 | 70 |
| | Operating Current (max) | | A | 13.0 | 13.0 | 19.0 | 19.0 | 26.5 | 8.0 | 26.5 | 9.5 | 28.0 | 13.0 |
| | Breaker Size | | A | 16 | 16 | 25 | 25 | 32 | 16 | 32 | 16 | 40 | 16 |
| Ext. Piping | Diameter | Liquid / Gas | mm | 6.35 / 12.7 | 6.35 / 12.7 | 9.52 / 15.88 | 9.52 / 15.88 | 9.52 / 15.88 | 9.52 / 15.88 | 9.52 / 15.88 | 9.52 / 15.88 | 9.52 / 15.88 | 9.52 / 15.88 |
| | Max. Length | Out-In | m | 50 | 50 | 50 | 50 | 75 | 75 | 75 | 75 | 75 | 75 |
| | Max. Height | Out-In | m | 30 | 30 | 30 | 30 | 30 | 30 | 30 | 30 | 30 | 30 |
| Guaranteed Operating Range [Outdoor] | | Cooling*3 | °C | –15 ~ +46 | –15 ~ +46 | –15 ~ +46 | –15 ~ +46 | –15 ~ +46 | –15 ~ +46 | –15 ~ +46 | –15 ~ +46 | –15 ~ +46 | –15 ~ +46 |
| | | Heating | °C | –11 ~ +21 | –11 ~ +21 | –20 ~ +21 | –20 ~ +21 | –20 ~ +21 | –20 ~ +21 | –20 ~ +21 | –20 ~ +21 | –20 ~ +21 | –20 ~ +21 |

*1 Refrigerant leakage contributes to climate change. Refrigerant with lower global warming potential (GWP) would contribute less to global warming than a refrigerant with higher GWP, if leaked to the atmosphere. This appliance contains a refrigerant fluid with a GWP equal to 1975. This means that if 1 kg of this refrigerant fluid would be leaked to the atmosphere, the impact on global warming would be 1975 times higher than 1 kg of $CO_2$, over a period of 100 years. Never try to interfere with the refrigerant circuit yourself or disassemble the product yourself and always ask a professional. The GWP of R410A is 2088 in the IPCC 4th Assessment Report.
*2 Energy consumption based on standard test results. Actual energy consumption will depend on how the appliance is used and where it is located.
*3 Optional air protection guide is required where ambient temperature is lower than –5°C.

# PEAD SERIES

R32
R410A

PEAD-M35/50/60/71/100/125/140JA(L)

The thin, ceiling-concealed indoor units of this series are the perfect answer for the air conditioning needs of buildings with minimum ceiling installation space and wide-ranging external static pressure. Energy-saving efficiency has been improved, reducing electricity consumption and contributing to a further reduction in operating cost.

## Compact Indoor Units

The height of the models from 35–140 has been unified to 250mm, which makes installation in low ceilings with minimal clearance space possilbe.

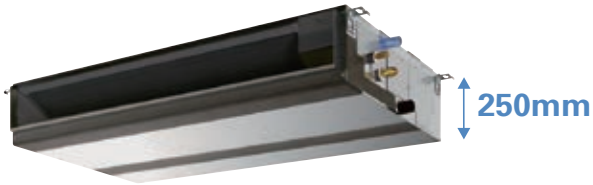


PEAD-M JA(L)

## External Static Pressure

External static pressure conversion can be set up to five stages. Capable of being set to a maximum of 150Pa, units are applicable to a wide range of building types.

## ErP Lot 10-compliant, Achieving High Energy Efficiency of SEER/SCOP Rank A+ and A++

A direct-current (DC) fan motor is installed in the indoor unit, increasing the seasonal energy efficiency of the newly designed Power Inverter Series (PUHZ-ZRP) and resulting in compliance of the full-capacity models with ErP Lot 10 and energy rankings of A+/A++ for cooling and A/A+ for heating. This contributes to an impressive reduction in the cost of annual electricity.

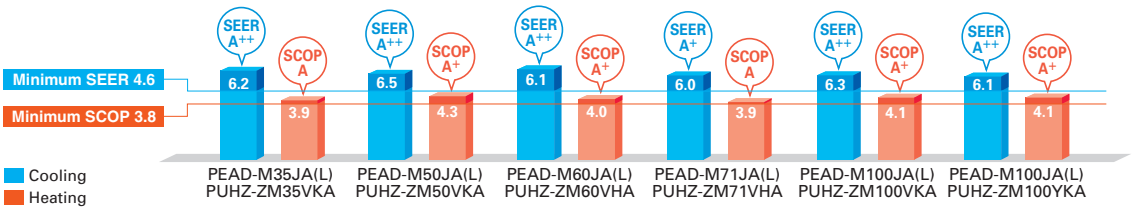


## Drain Pump Option Available with All Models

The line-up consists of two types, models with or without a built-in drain pump.

PEAD-M JA → Drain pump built-in

PEAD-M JAL → No drain pump

✻ Units with an "L" included at the end of the model name are not equipped with a drain pump.

## SERIES SELECTION

### Power Inverter Series

**Indoor Unit**

R32

R410A

PEAD-M35/50/60/71/100/125/140

**Outdoor Unit**

R32

For Single

PUZ-ZM35/50

PUZ-ZM60/71

PUZ-ZM100/125/140

R32

For Multi
(Twin/Triple/Quadruple)

PUZ-ZM71

PUZ-ZM100/125/140/200/250

**Remote Controller**

Optional

Optional

Optional

Optional

### PEAD-M JA Indoor Unit Combinations

Indoor unit combinations shown below are possible.

| Indoor Unit Combination | | Outdoor Unit Capacity | | | | | | | | | | | | | | | | | | | |
|---|---|---|---|---|---|---|---|---|---|---|---|---|---|---|---|---|---|---|---|---|---|
| | | For Single | | | | | | | | | For Twin | | | | | | For Triple | | | For Quadruple | |
| | | 35 | 50 | 60 | 71 | 100 | 125 | 140 | 200 | 250 | 71 | 100 | 125 | 140 | 200 | 250 | 140 | 200 | 250 | 200 | 250 |
| Power Inverter (PUHZ-ZRP) | | 35x1 | 50x1 | 60x1 | 71x1 | 100x1 | 125x1 | 140x1 | – | – | 35x2 | 50x2 | 60x2 | 71x2 | 100x2 | 125x2 | 50x3 | 60x3 | 71x3 | 50x4 | 60x4 |
| | Distribution Pipe | – | – | – | – | – | – | – | – | – | MSDD-50TR2-E | | | | MSDD-50WR2-E | | MSDT-111R3-E | | | MSDF-1111R2-E | |

## SERIES SELECTION

### Standard Inverter Series

**Indoor Unit**

R32

R410A

PEAD-M35/50/60/71/100/125/140

**Outdoor Unit**

R32

For Single

SUZ-M35

SUZ-M50

SUZ-M60/71

PUZ-M100/125/140

R32

For Multi
(Twin/Triple/Quadruple)

PUZ-M100/125/140

PUZ-M200/250

**Remote Controller**

Optional

Optional

Optional

Optional

### PEAD-M JA Indoor Unit Combinations

Indoor unit combinations shown below are possible.

| Indoor Unit Combination | | Outdoor Unit Capacity | | | | | | | | | | | | | | | | | | | |
|---|---|---|---|---|---|---|---|---|---|---|---|---|---|---|---|---|---|---|---|---|---|
| | | For Single | | | | | | | | | For Twin | | | | | | For Triple | | | For Quadruple | |
| | | 35 | 50 | 60 | 71 | 100 | 125 | 140 | 200 | 250 | 71 | 100 | 125 | 140 | 200 | 250 | 140 | 200 | 250 | 200 | 250 |
| Standard Inverter (PUHZ-P&SUZ) | | 35x1 | 50x1 | 60x1 | 71x1 | 100x1 | 125x1 | 140x1 | – | – | – | 50x2 | 60x2 | 71x2 | 100x2 | 125x2 | 50x3 | 60x3 | 71x3 | 50x4 | 60x4 |
| | Distribution Pipe | – | – | – | – | – | – | – | – | – | – | MSDD-50TR2-E | | | MSDD-50WR2-E | | MSDT-111R3-E | | | MSDF-1111R2-E | |

# PEAD-M SERIES
## POWER INVERTER

Demand Control (Optional) | Long Life | Check! | AUTO | ACO | Auto Restart | Low Temp Cooling | Silent | Ampere Limit (60-140V/200/250) | Rotation Back-up (PUHZ, Optional) | (Optional) | Group Control | M-NET connection (Optional) | Wi-Fi Interface (Optional) | COMPO

Cleaning-free pipe reuse | Wiring Reuse (Optional) | Drain Lift Up (JAQ) | Pump Down | Flare connection | Self Diagnosis | Failure Recall

| Type | | | | Inverter Heat Pump | | | | | | | | | |
|---|---|---|---|---|---|---|---|---|---|---|---|---|---|
| Indoor Unit | | | | PEAD-M35JA(L) | PEAD-M50JA(L) | PEAD-M60JA(L) | PEAD-M71JA(L) | PEAD-M100JA(L) | | PEAD-M125JA(L) | | PEAD-M140JA(L) | |
| Outdoor Unit | | | | PUZ-ZM35VKA | PUZ-ZM50VKA | PUZ-ZM60VHA | PUZ-ZM71VHA | PUZ-ZM100VKA | PUZ-ZM100YKA | PUZ-ZM125VKA | PUZ-ZM125YKA | PUZ-ZM140VKA | PUZ-ZM140YKA |
| Refrigerant | | | | R32*1 | | | | | | | | | |
| Power Supply | Source | | | Outdoor power supply | | | | | | | | | |
| | Outdoor (V/Phase/Hz) | | | VKA・VHA:230 / Single / 50, YKA:400 / Three / 50 | | | | | | | | | |
| Cooling | Capacity | Rated | kW | 3.6 | 5.0 | 6.1 | 7.1 | 9.5 | 9.5 | 12.5 | 12.5 | 13.4 | 13.4 |
| | | Min - Max | kW | 1.6 - 4.5 | 2.3 - 5.6 | 2.7 - 6.7 | 3.3 - 8.1 | 4.9 - 11.4 | 4.9 - 11.4 | 5.5 - 14.0 | 5.5 - 14.0 | 6.2 - 15.3 | 6.2 - 15.3 |
| | Total Input | Rated | kW | 0.837(0.820) | 1.201(1.187) | 1.509(1.495) | 1.858(1.844) | 2.272(2.256) | 2.272(2.256) | 3.333(3.315) | 3.333(3.315) | 3.631(3.611) | 3.631(3.611) |
| | EER*4 | | | 4.30(4.39) | 4.16(4.21) | 4.04(4.08) | 3.82(3.85) | 4.18(4.21) | 4.18(4.21) | 3.75(3.77) | 3.75(3.77) | 3.69(3.71) | 3.69(3.71) |
| | | EEL Rank | | – | – | – | – | – | – | – | – | – | – |
| | Design Load | | kW | 3.6 | 5.0 | 6.1 | 7.1 | 9.5 | 9.5 | – | – | – | – |
| | Annual Electricity Consumption*2 | | kWh/a | 217(201) | 282(268) | 350(337) | 428(414) | 534(521) | 543(532) | – | – | – | – |
| | SEER*4 | | | 5.8(6.2) | 6.2(6.5) | 6.1(6.3) | 5.8(6.0) | 6.2(6.3) | 6.1(6.2) | – | – | – | – |
| | | Energy Efficiency Class | | A+(A++) | A++(A++) | A++(A++) | A+(A+) | A++(A++) | A++(A++) | – | – | – | – |
| Heating (Average Season) | Capacity | Rated | kW | 4.1 | 6.0 | 7.0 | 8.0 | 11.2 | 11.2 | 14.0 | 14.0 | 16.0 | 16.0 |
| | | Min - Max | kW | 1.6 - 5.2 | 2.5 - 7.3 | 2.8 - 8.2 | 3.5 - 10.2 | 4.5 - 14.0 | 4.5 - 14.0 | 5.0 - 16.0 | 5.0 - 16.0 | 5.7 - 18.0 | 5.7 - 18.0 |
| | Total Input | Rated | kW | 0.917 | 1.312 | 1.616 | 1.932 | 2.598 | 2.598 | 3.349 | 3.349 | 3.970 | 3.970 |
| | COP*4 | | | 4.47 | 4.57 | 4.33 | 4.14 | 4.31 | 4.31 | 4.18 | 4.18 | 4.03 | 4.03 |
| | | EEL Rank | | – | – | – | – | – | – | – | – | – | – |
| | Design Load | | kW | 2.4 | 3.8 | 4.4 | 4.9 | 7.8 | 7.8 | – | – | – | – |
| | Declared Capacity | at reference design temperature | kW | 2.4(–10°C) | 3.8(–10°C) | 4.4(–10°C) | 4.9(–10°C) | 7.8(–10°C) | 7.8(–10°C) | – | – | – | – |
| | | at bivalent temperature | kW | 2.4(–10°C) | 3.8(–10°C) | 4.4(–10°C) | 4.9(–10°C) | 7.8(–10°C) | 7.8(–10°C) | – | – | – | – |
| | | at operation limit temperature | kW | 2.2(–11°C) | 3.7(–11°C) | 2.8(–20°C) | 3.7(–20°C) | 5.8(–20°C) | 5.8(–20°C) | – | – | – | – |
| | Back Up Heating Capacity | | kW | 0 | 0 | 0 | 0 | 0 | 0 | – | – | – | – |
| | Annual Electricity Consumption*2 | | kWh/a | 858 | 1237 | 1540 | 1751 | 2666 | 2666 | – | – | – | – |
| | SCOP*4 | | | 3.9 | 4.3 | 4.0 | 3.9 | 4.1 | 4.1 | – | – | – | – |
| | | Energy Efficiency Class | | A | A+ | A+ | A | A+ | A+ | – | – | – | – |
| Operating Current (max) | | | A | 14.1 | 14.4 | 20.6 | 21.0 | 29.2 | 10.7 | 29.3 | 12.3 | 30.8 | 15.8 |
| Indoor Unit | Input [Cooling / Heating] | Rated | kW | 0.09/0.07 | 0.11/0.09 | 0.12/0.10 | 0.17/0.15 | 0.25/0.23 | 0.25/0.23 | 0.36/0.34 | 0.36/0.34 | 0.39/0.37 | 0.39/0.37 |
| | Operating Current (max) | | A | 1.07 | 1.39 | 1.62 | 1.97 | 2.65 | 2.65 | 2.76 | 2.76 | 2.78 | 2.78 |
| | Dimensions <Panel> | H × W × D | mm | 250-900-732 | | 250-1100-732 | | 250-1400-732 | | | | 250-1600-732 | |
| | Weight <Panel> | | kg | 26(25) | 27(26) | 30(29) | 30(29) | 39(38) | 39(38) | 40(39) | 40(39) | 44(43) | 44(43) |
| | Air Volume [Lo-Mid-Hi] | | $m^3$/min | 10.0-12.0-14.0 | 12.0-14.5-17.0 | 14.5-18.0-21.0 | 17.5-21.0-25.0 | 24.0-29.0-34.0 | 24.0-29.0-34.0 | 29.5-35.5-42.0 | 29.5-35.5-42.0 | 32.0-39.0-46.0 | 32.0-39.0-46.0 |
| | External Static Pressure | | Pa | 35 / 50 / 70 / 100 / 150 | | | | | | | | | |
| | Sound Level (SPL) [Lo-Mid-Hi] | | dB(A) | 23 - 27 - 30 | 26 - 31 - 35 | 25 - 29 - 33 | 26 - 30 - 34 | 29 - 34 - 38 | 29 - 34 - 38 | 33 - 36 - 40 | 33 - 36 - 40 | 34 - 38 - 43 | 34 - 38 - 43 |
| | Sound Level (PWL) | | dB(A) | 54 | 59 | 55 | 58 | 62 | 62 | 66 | 66 | 67 | 67 |
| Outdoor Unit | Dimensions | H × W × D | mm | 630 - 809 - 300 | | 943 - 950 - 330(+25) | | 1338 - 1050 - 330(+40) | | | | | |
| | Weight | | kg | 46 | 46 | 70 | 70 | 116 | 123 | 116 | 125 | 118 | 131 |
| | Air Volume | Cooling | $m^3$/min | 45 | 45 | 55 | 55 | 110 | 110 | 120 | 120 | 120 | 120 |
| | | Heating | $m^3$/min | 45 | 45 | 55 | 55 | 110 | 110 | 120 | 120 | 120 | 120 |
| | Sound Level (SPL) | Cooling | dB(A) | 44 | 44 | 47 | 47 | 49 | 49 | 50 | 50 | 50 | 50 |
| | | Heating | dB(A) | 46 | 46 | 49 | 49 | 51 | 51 | 52 | 52 | 52 | 52 |
| | Sound Level (PWL) | Cooling | dB(A) | 65 | 65 | 67 | 67 | 69 | 69 | 70 | 70 | 70 | 70 |
| | Operating Current (max) | | A | 13.0 | 13.0 | 19.0 | 19.0 | 26.5 | 8.0 | 26.5 | 9.5 | 28.0 | 13.0 |
| | Breaker Size | | A | 16 | 16 | 25 | 25 | 32 | 16 | 32 | 16 | 40 | 16 |
| Ext. Piping | Diameter | Liquid / Gas | mm | 6.35 / 12.7 | 6.35 / 12.7 | 9.52 / 15.88 | 9.52 / 15.88 | 9.52 / 15.88 | 9.52 / 15.88 | 9.52 / 15.88 | 9.52 / 15.88 | 9.52 / 15.88 | 9.52 / 15.88 |
| | Max. Length | Out-In | m | 50 | 50 | 55 | 55 | 100 | 100 | 100 | 100 | 100 | 100 |
| | Max. Height | Out-In | m | 30 | 30 | 30 | 30 | 30 | 30 | 30 | 30 | 30 | 30 |
| Guaranteed Operating Range [Outdoor] | | Cooling*3 | °C | –15 ~ +46 | –15 ~ +46 | –15 ~ +46 | –15 ~ +46 | –15 ~ +46 | –15 ~ +46 | –15 ~ +46 | –15 ~ +46 | –15 ~ +46 | –15 ~ +46 |
| | | Heating | °C | –11 ~ +21 | –11 ~ +21 | –20 ~ +21 | –20 ~ +21 | –20 ~ +21 | –20 ~ +21 | –20 ~ +21 | –20 ~ +21 | –20 ~ +21 | –20 ~ +21 |

*1 Refrigerant leakage contributes to climate change. Refrigerant with lower global warming potential (GWP) would contribute less to global warming than a refrigerant with higher GWP, if leaked to the atmosphere. This appliance contains a refrigerant fluid with a GWP equal to 550. This means that if 1 kg of this refrigerant fluid would be leaked to the atmosphere, the impact on global warming would be 550 times higher than 1 kg of $CO_2$, over a period of 100 years. Never try to interfere with the refrigerant circuit yourself or disassemble the product yourself and always ask a professional. The GWP of R32 is 675 in the IPCC 4th Assessment Report.
*2 Energy consumption based on standard test results. Actual energy consumption will depend on how the appliance is used and where it is located.
*3 Optional air protection guide is required where ambient temperature is lower than –5°C. *4 EER/COP and SEER/SCOP for M35-71 are measured at ESP 35Pa, for M100 at ESP 37Pa, for M125/140 at ESP 50Pa.

# PEAD-M SERIES
## STANDARD INVERTER

Demand Control (Optional) | Long Life | Check! | AUTO | ACO | Auto Restart | Low Temp Cooling | Silent | Ampere Limit (60-140V/200/250) | Rotation Back-up (PUHZ, Optional) | (Optional) | Group Control | M-NET connection (Optional) | Wi-Fi Interface (Optional) | COMPO

Cleaning-free pipe reuse | Wiring Reuse (Optional) | Drain Lift Up (JAQ) | Pump Down | Flare connection | Self Diagnosis | Failure Recall

| Type | | | | Inverter Heat Pump | | | | | | | | | |
|---|---|---|---|---|---|---|---|---|---|---|---|---|---|
| Indoor Unit | | | | PEAD-M35JA(L) | PEAD-M50JA(L) | PEAD-M60JA(L) | PEAD-M71JA(L) | PEAD-M100JA(L) | | PEAD-M125JA(L) | | PEAD-M140JA(L) | |
| Outdoor Unit | | | | SUZ-M35VA | SUZ-M50VA | SUZ-M60VA | SUZ-M71VA | PUZ-M100VKA | PUZ-M100YKA | PUZ-M125VKA | PUZ-M125YKA | PUZ-M140VKA | PUZ-ZM140YKA |
| Refrigerant | | | | R32*1 | | | | | | | | | |
| Power Supply | Source | | | Outdoor power supply | | | | | | | | | |
| | Outdoor (V/Phase/Hz) | | | VA・VKA: 230 / Single / 50, YKA: 400 / Three / 50 | | | | | | | | | |
| Cooling | Capacity | Rated | kW | 3.6 | 5.0 | 6.1 | 7.1 | 9.5 | 9.5 | 12.1 | 12.1 | 13.4 | 13.4 |
| | | Min - Max | kW | 0.8 - 3.9 | 1.7 - 5.6 | 1.6 - 6.3 | 2.2 - 8.1 | 4.0 - 10.6 | 4.0 - 10.6 | 6.0 - 13.0 | 6.0 - 13.0 | 6.1 - 14.1 | 6.1 - 14.1 |
| | Total Input | Rated | kW | 0.92(0.90) | 1.35(1.33) | 1.69(1.67) | 2.02(2.00) | 2.87(2.85) | 2.87(2.85) | 4.01(3.99) | 4.01(3.99) | 4.76 | 4.76 |
| | EER*4 | | | 3.90(4.00) | 3.70(3.75) | 3.60(3.65) | 3.50(3.55) | 3.30(3.33) | 3.30(3.33) | 3.01(3.03) | 3.01(3.03) | 2.81 | 2.81 |
| | | EEL Rank | | – | – | – | – | – | – | – | – | – | – |
| | Design Load | | kW | 3.6 | 5.0 | 6.1 | 7.1 | 9.5 | 9.5 | 12.1 | 12.1 | 13.4 | 13.4 |
| | Annual Electricity Consumption*2 | | kWh/a | 217(199) | 287(271) | 353(335) | 428(411) | 613(598) | 613(598) | – | – | – | – |
| | SEER*4 | | | 5.8(6.3) | 6.1(6.4) | 6.0(6.3) | 5.8(6.0) | 5.4(5.5) | 5.4(5.5) | – | – | – | – |
| | | Energy Efficiency Class | | A+(A++) | A++(A++) | A+(A++) | A+(A+) | A (A) | A (A) | – | – | – | – |
| Heating (Average Season) | Capacity | Rated | kW | 4.1 | 6.0 | 7.0 | 8.0 | 11.2 | 11.2 | 13.5 | 13.5 | 15.0 | 15.0 |
| | | Min - Max | kW | 1.1 - 5.0 | 1.5 - 7.2 | 1.6 - 8.0 | 2.0 - 10.2 | 2.8 - 12.5 | 2.8 - 12.5 | 4.1 - 15.0 | 4.1 - 15.0 | 4.2 - 15.8 | 4.2 - 15.8 |
| | Total Input | Rated | kW | 1.02 | 1.46 | 1.84 | 2.15 | 2.94 | 2.94 | 3.73 | 3.73 | 4.15 | 4.15 |
| | COP*4 | | | 4.00 | 4.10 | 3.80 | 3.71 | 3.80 | 3.80 | 3.61 | 3.61 | 3.61 | 3.61 |
| | | EEL Rank | | – | – | – | – | – | – | – | – | – | – |
| | Design Load | | kW | 2.6 | 4.3 | 4.6 | 5.8 | 8.0 | 8.0 | 8.5 | 8.5 | 9.4 | 9.4 |
| | Declared Capacity | at reference design temperature | kW | 2.3(–10°C) | 3.8(–10°C) | 4.1(–10°C) | 5.2(–10°C) | 6.0(–10°C) | 6.0(–10°C) | 8.5(–10°C) | 8.5(–10°C) | 9.4(–10°C) | 9.4(–10°C) |
| | | at bivalent temperature | kW | 2.3(–7°C) | 3.8(–7°C) | 4.1(–7°C) | 5.2(–7°C) | 7.0(–7°C) | 7.0(–7°C) | 8.5(–10°C) | 8.5(–10°C) | 9.4(–10°C) | 9.4(–10°C) |
| | | at operation limit temperature | kW | 2.3(–10°C) | 3.8(–10°C) | 4.1(–10°C) | 5.2(–10°C) | 4.5(–15°C) | 4.5(–15°C) | 6.0(–15°C) | 6.0(–15°C) | 7.0(–15°C) | 7.0(–15°C) |
| | Back Up Heating Capacity | | kW | 0.5 | 0.5 | 0.5 | 0.6 | 2.0 | 2.0 | – | – | – | – |
| | Annual Electricity Consumption*2 | | kWh/a | 931 | 1430 | 1594 | 2080 | 2795 | 2795 | – | – | – | – |
| | SCOP*4 | | | 3.9 | 4.2 | 4.0 | 3.9 | 4.0 | 4.0 | – | – | – | – |
| | | Energy Efficiency Class | | A | A+ | A+ | A | A+ | A+ | – | – | – | – |
| Operating Current (max) | | | A | 9.6 | 14.9 | 16.4 | 16.8 | 22.7 | 14.2 | 29.3 | 14.3 | 32.8 | 14.3 |
| Indoor Unit | Input [Cooling / Heating] | Rated | kW | 0.09(0.07)/0.07 | 0.11(0.09)/0.09 | 0.12(0.10)/0.10 | 0.17(0.15)/0.15 | 0.25(0.23)/0.23 | 0.25(0.23)/0.23 | 0.36(0.34)/0.34 | 0.36(0.34)/0.34 | 0.39(0.37)/0.37 | 0.39(0.37)/0.37 |
| | Operating Current (max) | | A | 1.07 | 1.39 | 1.62 | 1.97 | 2.65 | 2.65 | 2.76 | 2.76 | 2.78 | 2.78 |
| | Dimensions <Panel> | H × W × D | mm | 250-900-732 | | 250-1100-732 | | 250-1400-732 | | | | 250-1600-732 | |
| | Weight <Panel> | | kg | 26(25) | 27(26) | 30(29) | 30(29) | 39(38) | 39(38) | 40(39) | 40(39) | 44(43) | 44(43) |
| | Air Volume [Lo-Mid-Hi] | | $m^3$/min | 10.0-12.0-14.0 | 12.0-14.5-17.0 | 14.5-18.0-21.0 | 17.5-21.0-25.0 | 24.0-29.0-34.0 | 24.0-29.0-34.0 | 29.5-35.5-42.0 | 29.5-35.5-42.0 | 32.0-39.0-46.0 | 32.0-39.0-46.0 |
| | External Static Pressure | | Pa | 35 / 50 / 70 / 100 / 150 | | | | | | | | | |
| | Sound Level (SPL) [Lo-Mid-Hi] | | dB(A) | 23 - 27 - 30 | 26 - 31 - 35 | 25 - 29 - 33 | 26 - 30 - 34 | 29 - 34 - 38 | 29 - 34 - 38 | 33 - 36 - 40 | 33 - 36 - 40 | 34 - 38 - 43 | 34 - 38 - 43 |
| | Sound Level (PWL) | | dB(A) | 54 | 59 | 55 | 58 | 62 | 62 | 66 | 66 | 67 | 67 |
| Outdoor Unit | Dimensions | H × W × D | mm | 550 - 800 - 285 | 714 - 800 - 285 | 880 - 840 - 330 | | 981 - 1050 - 330 | 981 - 1050 - 330(+40) | | | | |
| | Weight | | kg | 35 | 41 | 54 | 55 | 76 | 78 | 84 | 85 | 84 | 85 |
| | Air Volume | Cooling | $m^3$/min | 34.3 | 45.8 | 50.1 | 50.1 | 79.0 | 79.0 | 86.0 | 86.0 | 86.0 | 86.0 |
| | | Heating | $m^3$/min | 32.7 | 43.7 | 50.1 | 50.1 | 79.0 | 79.0 | 92.0 | 92.0 | 92.0 | 92.0 |
| | Sound Level (SPL) | Cooling | dB(A) | 48 | 48 | 49 | 49 | 51 | 51 | 54 | 54 | 55 | 55 |
| | | Heating | dB(A) | 48 | 49 | 51 | 51 | 54 | 54 | 56 | 56 | 57 | 57 |
| | Sound Level (PWL) | Cooling | dB(A) | 59 | 64 | 65 | 66 | 70 | 70 | 72 | 72 | 73 | 73 |
| | Operating Current (max) | | A | 8.5 | 13.5 | 14.8 | 14.8 | 20.0 | 11.5 | 26.5 | 11.5 | 30.0 | 11.5 |
| | Breaker Size | | A | 16 | 20 | 20 | 20 | 32 | 16 | 32 | 16 | 40 | 16 |
| Ext. Piping | Diameter | Liquid / Gas | mm | 6.35 / 9.52 | 6.35 / 12.7 | 6.35 / 15.88 | 9.52 / 15.88 | 9.52 / 15.88 | 9.52 / 15.88 | 9.52 / 15.88 | 9.52 / 15.88 | 9.52 / 15.88 | 9.52 / 15.88 |
| | Max. Length | Out-In | m | 20 | 30 | 30 | 30 | 55 | 55 | 65 | 65 | 65 | 65 |
| | Max. Height | Out-In | m | 12 | 30 | 30 | 30 | 30 | 30 | 30 | 30 | 30 | 30 |
| Guaranteed Operating Range [Outdoor] | | Cooling*3 | °C | –10 ~ +46 | –15 ~ +46 | –15 ~ +46 | –15 ~ +46 | –15 ~ +46 | –15 ~ +46 | –15 ~ +46 | –15 ~ +46 | –15 ~ +46 | –15 ~ +46 |
| | | Heating | °C | –10 ~ +24 | –10 ~ +24 | –10 ~ +24 | –10 ~ +24 | –15 ~ +21 | –15 ~ +21 | –15 ~ +21 | –15 ~ +21 | –15 ~ +21 | –15 ~ +21 |

*1 Refrigerant leakage contributes to climate change. Refrigerant with lower global warming potential (GWP) would contribute less to global warming than a refrigerant with higher GWP, if leaked to the atmosphere. This appliance contains a refrigerant fluid with a GWP equal to 550. This means that if 1 kg of this refrigerant fluid would be leaked to the atmosphere, the impact on global warming would be 550 times higher than 1 kg of $CO_2$, over a period of 100 years. Never try to interfere with the refrigerant circuit yourself or disassemble the product yourself and always ask a professional. The GWP of R32 is 675 in the IPCC 4th Assessment Report.
*2 Energy consumption based on standard test results. Actual energy consumption will depend on how the appliance is used and where it is located.
*3 Optional air protection guide is required where ambient temperature is lower than –5°C. *4 EER/COP and SEER/SCOP for M35-71 are measured at ESP 35Pa, for M100 at ESP 37Pa, for M125/140 at ESP 50Pa.

# SERIES SELECTION

## Power Inverter Series

DC Inverter | 35-71 Joint Lap | Vector Sine Wave | 100-250 DC Scroll | DC Fan Motor | Vector-Wave | 35-140 PAM | Power Receiver | Grooved Piping | 35-71 Heat Caulking Fixing Method

### Indoor Unit

R32
R410A

PEAD-M35/50/60/71/100/125/140

### Outdoor Unit

R410A

For Single

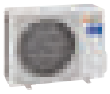

PUHZ-ZRP35/50

PUHZ-ZRP60/71

PUHZ-ZRP100/125/140

R410A

For Multi
(Twin/Triple/Quadruple)

PUHZ-ZRP71

PUHZ-ZRP100/125/140/200/250

### Remote Controller

Optional

Optional

Optional

Optional

## Standard Inverter Series

DC Inverter | 35-71 Joint Lap | 100-250 Vector Sine Wave | 71-140 DC Rotary | 200/250 DC Scroll | DC Fan Motor | 100-250 Vector-Wave | 35-140 PAM | Grooved Piping | 35-71 Heat Caulking Fixing Method

### Indoor Unit

R32
R410A

PEAD-M35/50/60/71/100/125/140

### Outdoor Unit

R410A

For Single

SUZ-KA35

SUZ-KA50/60/71

PUHZ-P100/125/140

R410A

For Multi
(Twin/Triple/Quadruple)

PUHZ-P100/125/140

PUHZ-P200/250

### Remote Controller

Optional

Optional

Optional

Optional

## PEAD-M JA(L) Indoor Unit Combinations

Indoor unit combinations shown below are possible.

| Indoor Unit Combination | | Outdoor Unit Capacity | | | | | | | | | | | | | | | | | | | |
|---|---|---|---|---|---|---|---|---|---|---|---|---|---|---|---|---|---|---|---|---|---|
| | | For Single | | | | | | | | | For Twin | | | | | | For Triple | | | For Quadruple | |
| | | 35 | 50 | 60 | 71 | 100 | 125 | 140 | 200 | 250 | 71 | 100 | 125 | 140 | 200 | 250 | 140 | 200 | 250 | 200 | 250 |
| Power Inverter (PUHZ-ZRP) | | 35x1 | 50x1 | 60x1 | 71x1 | 100x1 | 125x1 | 140x1 | – | – | 35x2 | 50x2 | 60x2 | 71x2 | 100x2 | 125x2 | 50x3 | 60x3 | 71x3 | 50x4 | 60x4 |
| | Distribution Pipe | – | – | – | – | – | – | – | – | – | MSDD-50TR-E | | | | MSDD-50WR-E | | MSDT-111R-E | | | MSDF-1111R-E | |
| Standard Inverter (PUHZ-P&SUZ) | | 35x1 | 50x1 | 60x1 | 71x1 | 100x1 | 125x1 | 140x1 | – | – | – | 50x2 | 60x2 | 71x2 | 100x2 | 125x2 | 50x3 | 60x3 | 71x3 | 50x4 | 60x4 |
| | Distribution Pipe | – | – | – | – | – | – | – | – | – | – | MSDD-50TR-E | | | MSDD-50WR-E | | MSDT-111R-E | | | MSDF-1111R-E | |

# PEAD-M SERIES
## POWER INVERTER

Demand Control (Optional) | Long Life | Check! | AUTO | ACO | Auto Restart | Low Temp Cooling | Silent | Ampere Limit (60-140V/200/250) | Rotation Back-up (PUHZ, Optional) | (Optional) | Group Control | M-NET connection (Optional) | Wi-Fi Interface (Optional) | COMPO

Cleaning-free pipe reuse | Wiring Reuse (Optional) | Drain Lift Up (JAQ) | Pump Down | Flare connection | Self Diagnosis | Failure Recall

| Type | | | | Inverter Heat Pump | | | | | | | | | |
|---|---|---|---|---|---|---|---|---|---|---|---|---|---|
| Indoor Unit | | | | PEAD-M35JA(L) | PEAD-M50JA(L) | PEAD-M60JA(L) | PEAD-M71JA(L) | PEAD-M100JA(L) | | PEAD-M125JA(L) | | PEAD-M140JA(L) | |
| Outdoor Unit | | | | PUHZ-ZRP35VKA2 | PUHZ-ZRP50VKA2 | PUHZ-ZRP60VHA2 | PUHZ-ZRP71VHA2 | PUHZ-ZRP100VKA3 | PUHZ-ZRP100YKA3 | PUHZ-ZRP125VKA3 | PUHZ-ZRP125YKA3 | PUHZ-ZRP140VKA3 | PUHZ-ZRP140YKA3 |
| Refrigerant | | | | R410A*1 | | | | | | | | | |
| Power Supply | Source | | | Outdoor power supply | | | | | | | | | |
| | Outdoor (V/Phase/Hz) | | | VKA・VHA:230 / Single / 50, YKA:400 / Three / 50 | | | | | | | | | |
| Cooling | Capacity | Rated | kW | 3.6 | 5.0 | 6.1 | 7.1 | 9.5 | 9.5 | 12.5 | 12.5 | 13.4 | 13.4 |
| | | Min - Max | kW | 1.6 - 4.5 | 2.3 - 5.6 | 2.7 - 6.7 | 3.3 - 8.1 | 4.9 - 11.4 | 4.9 - 11.4 | 5.5 - 14.0 | 5.5 - 14.0 | 6.2 - 15.3 | 6.2 - 15.3 |
| | Total Input | Rated | kW | 0.89 (0.87) | 1.44 (1.42) | 1.65 (1.63) | 2.01 (1.99) | 2.43 (2.41) | 2.43 (2.41) | 3.86 (3.83) | 3.86 (3.83) | 4.32 (4.29) | 4.32 (4.29) |
| | EER*4 | | | – | – | – | – | – | – | 3.24 (3.26) | 3.24 (3.26) | 3.10 (3.12) | 3.10 (3.12) |
| | EEL Rank | | | – | – | – | – | – | – | – | – | – | – |
| | Design Load | | kW | 3.6 | 5.0 | 6.1 | 7.1 | 9.5 | 9.5 | – | – | – | – |
| | Annual Electricity Consumption*2 | | kWh/a | 221 (205) | 304 (288) | 355 (340) | 428 (411) | 554 (543) | 565 (554) | – | – | – | – |
| | SEER*4 | | | 5.7 (6.1) | 5.7 (6.0) | 6.0 (6.2) | 5.8 (6.0) | 6.0 (6.1) | 5.8 (6.0) | – | – | – | – |
| | Energy Efficiency Class | | | A+ (A++) | A+ (A+) | A+ (A++) | A+ (A+) | A+ (A++) | A+ (A+) | – | – | – | – |
| Heating (Average Season) | Capacity | Rated | kW | 4.1 | 6.0 | 7.0 | 8.0 | 11.2 | 11.2 | 14.0 | 14.0 | 16.0 | 16.0 |
| | | Min - Max | kW | 1.6 - 5.2 | 2.5 - 7.3 | 2.8 - 8.2 | 3.5 - 10.2 | 4.5 - 14.0 | 4.5 - 14.0 | 5.0 - 16.0 | 5.0 - 16.0 | 5.7 - 18.0 | 5.7 - 18.0 |
| | Total Input | Rated | kW | 0.95 | 1.50 | 1.79 | 2.03 | 2.60 | 2.60 | 3.51 | 3.51 | 4.07 | 4.07 |
| | COP*4 | | | – | – | – | – | – | – | 3.99 | 3.99 | 3.93 | 3.93 |
| | EEL Rank | | | – | – | – | – | – | – | – | – | – | – |
| | Design Load | | kW | 2.4 | 3.8 | 4.4 | 4.9 | 7.8 | 7.8 | – | – | – | – |
| | Declared Capacity | at reference design temperature | kW | 2.4 (–10°C) | 3.8 (–10°C) | 4.4 (–10°C) | 4.9 (–10°C) | 7.8 (–10°C) | 7.8 (–10°C) | – | – | – | – |
| | | at bivalent temperature | kW | 2.4 (–10°C) | 3.8 (–10°C) | 4.4 (–10°C) | 4.9 (–10°C) | 7.8 (–10°C) | 7.8 (–10°C) | – | – | – | – |
| | | at operation limit temperature | kW | 2.2 (–11°C) | 3.7 (–11°C) | 2.8 (–20°C) | 3.7 (–20°C) | 5.8 (–20°C) | 5.8 (–20°C) | – | – | – | – |
| | Back Up Heating Capacity | | kW | 0 | 0 | 0 | 0 | 0 | 0 | – | – | – | – |
| | Annual Electricity Consumption*2 | | kWh/a | 839 | 1231 | 1513 | 1762 | 2627 | 2627 | – | – | – | – |
| | SCOP*4 | | | 4.0 | 4.3 | 4.1 | 3.9 | 4.2 | 4.2 | – | – | – | – |
| | Energy Efficiency Class | | | A+ | A+ | A+ | A | A+ | A+ | – | – | – | – |
| Operating Current (max) | | | A | 14.1 | 14.4 | 20.6 | 21.0 | 29.2 | 10.7 | 29.3 | 12.3 | 30.8 | 15.8 |
| Indoor Unit | Input [Cooling / Heating] | Rated | kW | 0.09 (0.07) / 0.07 | 0.11 (0.09) / 0.09 | 0.12 (0.10) / 0.10 | 0.17 (0.15) / 0.15 | 0.25 (0.23) / 0.23 | 0.25 (0.23) / 0.23 | 0.36 (0.34) / 0.34 | 0.36 (0.34) / 0.34 | 0.39 (0.37) / 0.37 | 0.39 (0.37) / 0.37 |
| | Operating Current (max) | | A | 1.07 | 1.39 | 1.62 | 1.97 | 2.65 | 2.65 | 2.76 | 2.76 | 2.78 | 2.78 |
| | Dimensions <Panel> | H × W × D | mm | 250-900-732 | | 250-1100-732 | | 250-1400-732 | | | | 250-1600-732 | |
| | Weight <Panel> | | kg | 26 (25) | 27 (26) | 30 (29) | 30 (29) | 39 (38) | 39 (38) | 40 (39) | 40 (39) | 44 (43) | 44 (43) |
| | Air Volume [Lo-Mid-Hi] | | m³/min | 10.0-12.0-14.0 | 12.0-14.5-17.0 | 14.5-18.0-21.0 | 17.5-21.0-25.0 | 24.0-29.0-34.0 | 24.0-29.0-34.0 | 29.5-35.5-42.0 | 29.5-35.5-42.0 | 32.0-39.0-46.0 | 32.0-39.0-46.0 |
| | External Static Pressure | | Pa | 35 / 50 / 70 / 100 / 150 | | | | | | | | | |
| | Sound Level (SPL) [Lo-Mid-Hi] | | dB(A) | 23 - 27 - 30 | 26 - 31 - 35 | 25 - 29 - 33 | 26 - 30 - 34 | 29 - 34 - 38 | 29 - 34 - 38 | 33 - 36 - 40 | 33 - 36 - 40 | 34 - 38 - 43 | 34 - 38 - 43 |
| | Sound Level (PWL) | | dB(A) | 54 | 59 | 55 | 58 | 62 | 62 | 66 | 66 | 67 | 67 |
| Outdoor Unit | Dimensions | H × W × D | mm | 630 - 809 - 300 | | 943 - 950 - 330 (+30) | | 1338 - 1050 - 330 (+40) | | | | | |
| | Weight | | kg | 43 | 46 | 70 | 70 | 116 | 123 | 116 | 125 | 118 | 131 |
| | Air Volume | Cooling | m³/min | 45 | 45 | 55 | 55 | 110 | 110 | 120 | 120 | 120 | 120 |
| | | Heating | m³/min | 45 | 45 | 55 | 55 | 110 | 110 | 120 | 120 | 120 | 120 |
| | Sound Level (SPL) | Cooling | dB(A) | 44 | 44 | 47 | 47 | 49 | 49 | 50 | 50 | 50 | 50 |
| | | Heating | dB(A) | 46 | 46 | 48 | 48 | 51 | 51 | 52 | 52 | 52 | 52 |
| | Sound Level (PWL) | Cooling | dB(A) | 65 | 65 | 67 | 67 | 69 | 69 | 70 | 70 | 70 | 70 |
| | Operating Current (max) | | A | 13.0 | 13.0 | 19.0 | 19.0 | 26.5 | 8.0 | 26.5 | 9.5 | 28.0 | 13.0 |
| | Breaker Size | | A | 16 | 16 | 25 | 25 | 32 | 16 | 32 | 16 | 40 | 16 |
| Ext. Piping | Diameter | Liquid / Gas | mm | 6.35 / 12.7 | 6.35 / 12.7 | 9.52 / 15.88 | 9.52 / 15.88 | 9.52 / 15.88 | 9.52 / 15.88 | 9.52 / 15.88 | 9.52 / 15.88 | 9.52 / 15.88 | 9.52 / 15.88 |
| | Max. Length | Out-In | m | 50 | 50 | 50 | 50 | 75 | 75 | 75 | 75 | 75 | 75 |
| | Max. Height | Out-In | m | 30 | 30 | 30 | 30 | 30 | 30 | 30 | 30 | 30 | 30 |
| Guaranteed Operating Range [Outdoor] | | Cooling*3 | °C | –15 ~ +46 | –15 ~ +46 | –15 ~ +46 | –15 ~ +46 | –15 ~ +46 | –15 ~ +46 | –15 ~ +46 | –15 ~ +46 | –15 ~ +46 | –15 ~ +46 |
| | | Heating | °C | –11 ~ +21 | –11 ~ +21 | –20 ~ +21 | –20 ~ +21 | –20 ~ +21 | –20 ~ +21 | –20 ~ +21 | –20 ~ +21 | –20 ~ +21 | –20 ~ +21 |

*1 Refrigerant leakage contributes to climate change. Refrigerant with lower global warming potential (GWP) would contribute less to global warming than a refrigerant with higher GWP, if leaked to the atmosphere. This appliance contains a refrigerant fluid with a GWP equal to 1975. This means that if 1 kg of this refrigerant fluid would be leaked to the atmosphere, the impact on global warming would be 1975 times higher than 1 kg of $CO_2$, over a period of 100 years. Never try to interfere with the refrigerant circuit yourself or disassemble the product yourself and always ask a professional. The GWP of R410A is 2088 in the IPCC 4th Assessment Report.
*2 Energy consumption based on standard test results. Actual energy consumption will depend on how the appliance is used and where it is located.
*3 Optional air protection guide is required where ambient temperature is lower than –5°C. *4 EER/COP and SEER/SCOP for M35-71 are measured at ESP 35Pa, for M100 at ESP 37Pa, for M125/140 at ESP 50Pa.

# PEAD-M SERIES
## STANDARD INVERTER

Demand Control (PUHZ, Optional) | Long Life | Check! | AUTO | ACO | Auto Restart | Low Temp Cooling | Silent | Rotation Back-up (PUHZ, Optional) | (Optional) | Group Control (PUHZ) | Group Control (SUZ, Optional) | M-NET connection (Optional) | Wi-Fi Interface (Optional) | COMPO (PUHZ)

Cleaning-free pipe reuse | Wiring Reuse (PUHZ, Optional) | Drain Lift Up (JAQ) | Pump Down (PUHZ) | Flare connection | Self Diagnosis | Failure Recall

| Type | | | | Inverter Heat Pump | | | | | | | | | |
|---|---|---|---|---|---|---|---|---|---|---|---|---|---|
| Indoor Unit | | | | PEAD-M35JA(L) | PEAD-M50JA(L) | PEAD-M60JA(L) | PEAD-M71JA(L) | PEAD-M100JA(L) | | PEAD-M125JA(L) | | PEAD-M140JA(L) | |
| Outdoor Unit | | | | SUZ-KA35VA6 | SUZ-KA50VA6 | SUZ-KA60VA6 | SUZ-KA71VA6 | PUHZ-P100VKA | PUHZ-P100YKA | PUHZ-P125VKA | PUHZ-P125YKA | PUHZ-P140VKA | PUHZ-P140YKA |
| Refrigerant | | | | R410A*1 | | | | | | | | | |
| Power Supply | Source | | | Outdoor power supply | | | | | | | | | |
| | Outdoor (V/Phase/Hz) | | | VA・VKA:230 / Single / 50, YKA:400 / Three / 50 | | | | | | | | | |
| Cooling | Capacity | Rated | kW | 3.6 | 4.9 | 5.7 | 7.1 | 9.4 | 9.4 | 12.1 | 12.1 | 13.6 | 13.6 |
| | | Min - Max | kW | 1.4 - 3.9 | 2.3 - 5.6 | 2.3 - 6.3 | 2.8 - 8.1 | 3.7 - 10.6 | 3.7 - 10.6 | 5.6 - 13.0 | 5.6 - 13.0 | 5.8 - 14.1 | 5.8 - 14.1 |
| | Total Input | Rated | kW | 1.050 (1.030) | 1.480 (1.460) | 1.670 (1.650) | 2.080 (2.060) | 2.98 (2.96) | 2.98 (2.96) | 4.15 (4.14) | 4.15 (4.14) | 5.21 (5.19) | 5.21 (5.19) |
| | EER*4 | | | – | – | – | – | 3.17 | 3.17 | 2.91 (2.92) | 2.91 (2.92) | 2.61 (2.62) | 2.61 (2.62) |
| | EEL Rank | | | – | – | – | – | – | – | – | – | – | – |
| | Design Load | | kW | 3.6 | 4.9 | 5.7 | 7.1 | 9.4 | 9.4 | – | – | – | – |
| | Annual Electricity Consumption*2 | | kWh/a | 222 (210) | 302 (290) | 337 (325) | 408 (396) | 644 (627) | 644 (627) | – | – | – | – |
| | SEER*4 | | | 5.6 (6.0) | 5.6 (5.9) | 5.9 (6.1) | 6.1 (6.2) | 5.1 (5.2) | 5.1 (5.2) | – | – | – | – |
| | Energy Efficiency Class | | | A+ (A+) | A+ (A+) | A+ (A++) | A++ (A++) | A (A) | A (A) | – | – | – | – |
| Heating (Average Season) | Capacity | Rated | kW | 4.1 | 5.9 | 7.0 | 8.0 | 11.2 | 11.2 | 13.5 | 13.5 | 15.0 | 15.0 |
| | | Min - Max | kW | 1.7 - 5.0 | 1.7 - 7.2 | 2.5 - 8.0 | 2.6 - 10.2 | 2.8 - 12.5 | 2.8 - 12.5 | 4.8 - 15.0 | 4.8 - 15.0 | 4.9 - 15.8 | 4.9 - 15.8 |
| | Total Input | Rated | kW | 1.110 | 1.620 | 1.930 | 2.040 | 2.94 | 2.94 | 3.73 | 3.73 | 4.27 | 4.27 |
| | COP*4 | | | – | – | – | – | 3.80 | 3.80 | 3.61 | 3.61 | 3.51 | 3.51 |
| | EEL Rank | | | – | – | – | – | – | – | – | – | – | – |
| | Design Load | | kW | 2.8 | 4.4 | 4.5 | 6.0 | 8.0 | 8.0 | – | – | – | – |
| | Declared Capacity | at reference design temperature | kW | 2.5 (–10°C) | 3.9 (–10°C) | 4.1 (–10°C) | 5.3 (–10°C) | 6.0 (–10°C) | 6.0 (–10°C) | – | – | – | – |
| | | at bivalent temperature | kW | 2.5 (–7°C) | 3.9 (–7°C) | 4.1 (–7°C) | 5.3 (–7°C) | 7.0 (–7°C) | 7.0 (–7°C) | – | – | – | – |
| | | at operation limit temperature | kW | 2.5 (–10°C) | 3.9 (–10°C) | 4.1 (–10°C) | 5.3 (–10°C) | 4.5 (–15°C) | 4.5 (–15°C) | – | – | – | – |
| | Back Up Heating Capacity | | kW | 0.3 | 0.5 | 0.5 | 0.7 | 2.0 | 2.0 | – | – | – | – |
| | Annual Electricity Consumption*2 | | kWh/a | 980 | 1466 | 1569 | 2153 | 2793 | 2793 | – | – | – | – |
| | SCOP*4 | | | 4.0 | 4.2 | 4.0 | 3.9 | 4.0 | 4.0 | – | – | – | – |
| | Energy Efficiency Class | | | A+ | A+ | A+ | A | A+ | A+ | – | – | – | – |
| Operating Current (max) | | | A | 9.3 | 13.4 | 15.6 | 18.1 | 22.7 | 14.2 | 29.3 | 14.3 | 32.8 | 14.3 |
| Indoor Unit | Input [Cooling / Heating] | Rated | kW | 0.09 (0.07) / 0.07 | 0.11 (0.09) / 0.09 | 0.12 (0.10) / 0.10 | 0.17 (0.15) / 0.15 | 0.25 (0.23) / 0.23 | 0.25 (0.23) / 0.23 | 0.36 (0.34) / 0.34 | 0.36 (0.34) / 0.34 | 0.39 (0.37) / 0.37 | 0.39 (0.37) / 0.37 |
| | Operating Current (max) | | A | 1.07 | 1.39 | 1.62 | 1.97 | 2.65 | 2.65 | 2.76 | 2.76 | 2.78 | 2.78 |
| | Dimensions <Panel> | H × W × D | mm | 250-900-732 | | 250-1100-732 | | 250-1400-732 | | | | 250-1600-732 | |
| | Weight <Panel> | | kg | 26 (25) | 27 (26) | 30 (29) | 30 (29) | 39 (38) | 39 (38) | 40 (39) | 40 (39) | 44 (43) | 44 (43) |
| | Air Volume [Lo-Mid-Hi] | | m³/min | 10.0 - 12.0 - 14.0 | 12.0-14.5-17.0 | 14.5-18.0-21.0 | 17.5-21.0-25.0 | 24.0-29.0-34.0 | 24.0-29.0-34.0 | 29.5-35.5-42.0 | 29.5-35.5-42.0 | 32.0-39.0-46.0 | 32.0-39.0-46.0 |
| | External Static Pressure | | Pa | 35 / 50 / 70 / 100 / 150 | | | | | | | | | |
| | Sound Level (SPL) [Lo-Mid-Hi] | | dB(A) | 23 - 27 - 30 | 26 - 31 - 35 | 25 - 29 - 33 | 26 - 30 - 34 | 29 - 34 - 38 | 29 - 34 - 38 | 33 - 36 - 40 | 33 - 36 - 40 | 34 - 38 - 43 | 34 - 38 - 43 |
| | Sound Level (PWL) | | dB(A) | 54 | 59 | 55 | 58 | 62 | 62 | 66 | 66 | 67 | 67 |
| Outdoor Unit | Dimensions | H × W × D | mm | 550-800-285 | | 880-840-330 | | 981-1050-330 | | | | | |
| | Weight | | kg | 35 | 54 | 50 | 53 | 76 | 78 | 84 | 85 | 84 | 85 |
| | Air Volume | Cooling | m³/min | 36.3 | 44.6 | 40.9 | 50.1 | 79 | 79 | 86 | 86 | 86 | 86 |
| | | Heating | m³/min | 34.8 | 44.6 | 49.2 | 48.2 | 79 | 79 | 92 | 92 | 92 | 92 |
| | Sound Level (SPL) | Cooling | dB(A) | 49 | 52 | 55 | 55 | 51 | 51 | 54 | 54 | 56 | 56 |
| | | Heating | dB(A) | 50 | 52 | 55 | 55 | 54 | 54 | 56 | 56 | 57 | 57 |
| | Sound Level (PWL) | Cooling | dB(A) | 62 | 65 | 65 | 69 | 70 | 70 | 72 | 72 | 75 | 75 |
| | Operating Current (max) | | A | 8.2 | 12.0 | 14.0 | 16.1 | 20.0 | 11.5 | 26.5 | 11.5 | 30.0 | 11.5 |
| | Breaker Size | | A | 10 | 20 | 20 | 20 | 32 | 16 | 32 | 16 | 40 | 16 |
| Ext. Piping | Diameter | Liquid / Gas | mm | 6.35 / 9.52 | 6.35 / 12.7 | 6.35 / 15.88 | 9.52 / 15.88 | 9.52 / 15.88 | 9.52 / 15.88 | 9.52 / 15.88 | 9.52 / 15.88 | 9.52 / 15.88 | 9.52 / 15.88 |
| | Max. Length | Out-In | m | 20 | 30 | 30 | 30 | 50 | 50 | 50 | 50 | 50 | 50 |
| | Max. Height | Out-In | m | 12 | 30 | 30 | 30 | 30 | 30 | 30 | 30 | 30 | 30 |
| Guaranteed Operating Range [Outdoor] | | Cooling*3 | °C | –10 ~ +46 | –15 ~ +46 | –15 ~ +46 | –15 ~ +46 | –15 ~ +46 | –15 ~ +46 | –15 ~ +46 | –15 ~ +46 | –15 ~ +46 | –15 ~ +46 |
| | | Heating | °C | –10 ~ +24 | –10 ~ +24 | –10 ~ +24 | –10 ~ +24 | –15 ~ +21 | –15 ~ +21 | –15 ~ +21 | –15 ~ +21 | –15 ~ +21 | –15 ~ +21 |

*1 Refrigerant leakage contributes to climate change. Refrigerant with lower global warming potential (GWP) would contribute less to global warming than a refrigerant with higher GWP, if leaked to the atmosphere. This appliance contains a refrigerant fluid with a GWP equal to 1975. This means that if 1 kg of this refrigerant fluid would be leaked to the atmosphere, the impact on global warming would be 1975 times higher than 1 kg of $CO_2$, over a period of 100 years. Never try to interfere with the refrigerant circuit yourself or disassemble the product yourself and always ask a professional. The GWP of R410A is 2088 in the IPCC 4th Assessment Report.
*2 Energy consumption based on standard test results. Actual energy consumption will depend on how the appliance is used and where it is located.
*3 Optional air protection guide is required where ambient temperature is lower than –5°C. *4 EER/COP and SEER/SCOP for M35-71 are measured at ESP 35Pa, for M100 at ESP 37Pa, for M125/140 at ESP 50Pa.

# PEA SERIES

PEA-RP200/250WKA

For elegance and style, the PEA Series compliments the room environment with an aesthetically pleasing ceiling installation and a vast line-up of performance functions. Long pipe work installation is supported, increasing freedom in the placement of indoor units.

## Flexible Duct Design Enables Use of High-pressure Static Fan

A flexible duct design and 150Pa external static high-pressure are incorporated. The increased variation in airflow options ensures operation that best matches virtually all room layouts.

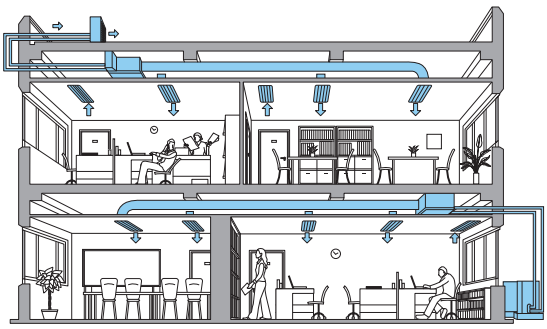

## Long Refrigerant Piping Length

With the addition of more refrigerant, the maximum length for refrigerant piping has been increased to 100 metres. As a result, it is much easier to create the optimum layout for unit installation.

| | | Power Inverter Connection | | Standard Inverter Connection | |
|---|---|---|---|---|---|
| | | Max. Length | Max. Height | Max. Length | Max. Height |
| PEA-RP | 200 | 100m | 30m | 70m | 30m |
| | 250 | 100m | 30m | 70m | 30m |

## Wide-ranging Line-up from 20–25kW – Extensive Array of Choices to Match Building Size

### [System Image]

PEA-RP200/250WKA

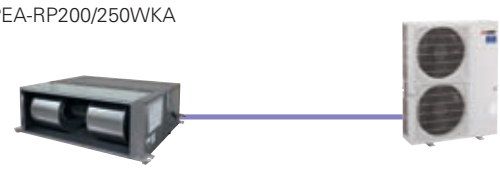

• For PEA-200, 250

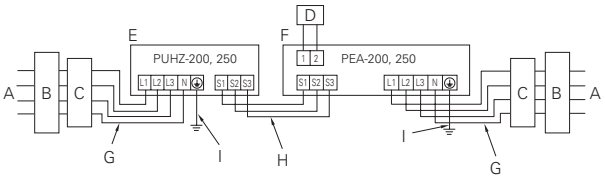


## PAR-40MAA Group Control

The PAR-40MAA remote controller can control up to 16 systems* as a group, and is ideal for supporting the integrated management of building air conditioners.

• For PEA-200, 250

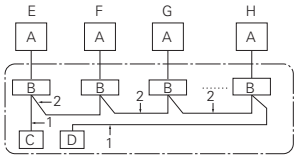


A Outdoor unit
B Indoor unit
C Main remote controller
D Subordinate remote controller
E Standard (Refrigerant address = 00)
F Refrigerant address = 01
G Refrigerant address = 02
H Refrigerant address = 15

## LINE-UP

### Indoor Unit

R410A

PEA-RP200/250WKA

### Outdoor Unit

**Power Inverter Series**

R410A

PUHZ-ZRP200/250

**Standard Inverter Series**

R410A

PUHZ-P200/250

### Remote Controller

Optional

Optional

Optional

# PEA-RP SERIES
POWER INVERTER

| Type | | | | Inverter Heat Pump | |
|---|---|---|---|---|---|
| Indoor Unit | | | | PEA-RP200WKA | PEA-RP250WKA |
| Outdoor Unit | | | | PUHZ-ZRP200YKA3 | PUHZ-ZRP250YKA3 |
| Refrigerant | | | | R410A*1 | |
| Power Supply | Source | | | Outdoor power supply | |
| | Outdoor (V/Phase/Hz) | | | 400 / Three / 50 | |
| Cooling | Capacity | Rated | kW | 19.0 | 22.0 |
| | | Min - Max | kW | 9.0 - 22.4 | 11.2 - 27.0 |
| | Total Input | Rated | kW | 6.03 | 8.05 |
| | EER | | | 3.15 | 2.73 |
| | | EEL Rank | | - | - |
| Heating (Average Season) | Capacity | Rated | kW | 22.4 | 27.0 |
| | | Min - Max | kW | 9.5 - 25.0 | 12.5 - 31.0 |
| | Total Input | Rated | kW | 6.58 | 8.43 |
| | COP | | | 3.40 | 3.20 |
| | | EEL Rank | | - | - |
| Operating Current (max) | | | | 23.3 | 26.5 |
| Indoor Unit | Input [Cooling / Heating] | Rated | kW | 0.66 | 0.80 |
| | Operating Current (max) | | A | 4.3 | 5.5 |
| | Dimensions | H x W x D | mm | 470 - 1370 - 1120 | |
| | Weight | | kg | 108 | |
| | Air Volume [Lo-Hi] | | m³/min | 50 - 61 - 72 | 58 - 71 - 84 |
| | External Static Pressure | | Pa | (60) / (75) / (100) / 150 | |
| | Sound Level (SPL) [Lo-Hi] | | dB(A) | 38 - 41 - 44 | 40 - 43 - 46 |
| | Sound Level (PWL) | | dB(A) | 65 - 66 - 67 | 70 - 71 - 72 |
| Outdoor Unit | Dimensions | H x W x D | mm | 1338 - 1050 - 330 (+40) | |
| | Weight | | kg | 135 | 135 |
| | Air Volume | Cooling | m³/min | 140 | 140 |
| | | Heating | m³/min | 140 | 140 |
| | Sound Level (SPL) | Cooling | dB(A) | 59 | 59 |
| | | Heating | dB(A) | 62 | 62 |
| | Sound Level (PWL) | Cooling | dB(A) | 77 | 77 |
| | Operating Current (max) | | A | 19.0 | 21.0 |
| | Breaker Size | | A | 32 | 32 |
| Ext. Piping | Diameter | Liquid / Gas | mm | 9.52 / 25.4 | 12.7 / 25.4 |
| | Max. Length | Out-In | m | 100 | 100 |
| | Max. Height | Out-In | m | 30 | 30 |
| Guaranteed Operating Range [Outdoo | | Cooling*2 | ℃ | -15 ~ +46 | -15 ~ +46 |
| | | Heating | ℃ | -20 ~ +21 | -20 ~ +21 |

*1 Refrigerant leakage contributes to climate change. Refrigerant with lower global warming potential (GWP) would contribute less to global warming than a refrigerant with higher GWP, if leaked to the atmosphere. This appliance contains a refrigerant fluid with a GWP equal to 1975. This means that if 1 kg of this refrigerant fluid would be leaked to the atmosphere, the impact on global warming would be 1975 times higher than 1 kg of $CO_2$, over a period of 100 years. Never try to interfere with the refrigerant circuit yourself or disassemble the product yourself and always ask a professional.
The GWP of R410A is 2088 in the IPCC 4th Assessment Report.
*2 Optional air protection guide is required where ambient temperature is lower than -5°C.

# PEA-RP SERIES
STANDARD INVERTER

| Type | | | | Inverter Heat Pump | |
|---|---|---|---|---|---|
| Indoor Unit | | | | PEA-RP200WKA | PEA-RP250WKA |
| Outdoor Unit | | | | PUHZ-P200YKA3 | PUHZ-P250YKA3 |
| Refrigerant | | | | R410A*1 | |
| Power Supply | Source | | | Outdoor power supply | |
| | Outdoor (V/Phase/Hz) | | | 400 / Three / 50 | |
| Cooling | Capacity | Rated | kW | 19.0 | 22.0 |
| | | Min - Max | kW | 9.0 - 22.4 | 11.2 - 27.0 |
| | Total Input | Rated | kW | 6.29 | 8.14 |
| | EER | | | 3.02 | 2.70 |
| | | EEL Rank | | - | - |
| Heating (Average Season) | Capacity | Rated | kW | 22.4 | 27.0 |
| | | Min - Max | kW | 9.5 - 25.0 | 12.5 - 31.0 |
| | Total Input | Rated | kW | 6.78 | 8.70 |
| | COP | | | 3.30 | 3.10 |
| | | EEL Rank | | - | - |
| Operating Current (max) | | | | 23.3 | 26.5 |
| Indoor Unit | Input [Cooling / Heating] | Rated | kW | 0.66 | 0.80 |
| | Operating Current (max) | | A | 4.3 | 5.5 |
| | Dimensions | H x W x D | mm | 470 - 1370 - 1120 | |
| | Weight | | kg | 108 | |
| | Air Volume [Lo-Hi] | | m³/min | 50 - 61 - 72 | 58 - 71 - 84 |
| | External Static Pressure | | Pa | (60) / (75) / (100) / 150 | |
| | Sound Level (SPL) [Lo-Mid-Hi] | | dB(A) | 38 - 41 - 44 | 40 - 43 - 46 |
| | Sound Level (PWL) | | dB(A) | 65 - 66 - 67 | 70 - 71 - 72 |
| Outdoor Unit | Dimensions | H x W x D | mm | 1338 - 1050 - 330 (+40) | |
| | Weight | | kg | 127 | 135 |
| | Air Volume | Cooling | m³/min | 140 | 140 |
| | | Heating | m³/min | 140 | 140 |
| | Sound Level (SPL) | Cooling | dB(A) | 58 | 59 |
| | | Heating | dB(A) | 60 | 62 |
| | Sound Level (PWL) | Cooling | dB(A) | 78 | 77 |
| | Operating Current (max) | | A | 19.0 | 21.0 |
| | Breaker Size | | A | 32 | 32 |
| Ext. Piping | Diameter | Liquid / Gas | mm | 9.52 / 25.4 | 12.7/25.4 |
| | Max. Length | Out-In | m | 70 | 70 |
| | Max. Height | Out-In | m | 30 | 30 |
| Guaranteed Operating Range [Outdoor] | | Cooling*2 | ℃ | -15 ~ +46 | -15 ~ +46 |
| | | Heating | ℃ | -20 ~ +21 | -20 ~ +21 |

*1 Refrigerant leakage contributes to climate change. Refrigerant with lower global warming potential (GWP) would contribute less to global warming than a refrigerant with higher GWP, if leaked to the atmosphere. This appliance contains a refrigerant fluid with a GWP equal to 1975. This means that if 1 kg of this refrigerant fluid would be leaked to the atmosphere, the impact on global warming would be 1975 times higher than 1 kg of $CO_2$, over a period of 100 years. Never try to interfere with the refrigerant circuit yourself or disassemble the product yourself and always ask a professional.
The GWP of R410A is 2088 in the IPCC 4th Assessment Report.
*2 Optional air protection guide is required where ambient temperature is lower than -5°C.

# PKA SERIES

PKA-M35/50HA(L)

PKA-M60/71/100KA(L)

The compact, wall-mounted indoor units offer the convenience of simple installation, and a large product line-up (M35-M100 models) ensures a best-match solution. Designed for highly efficient energy savings, the PKA Series is the answer to your air conditioning needs.

## Wired & Wireless Model

Wired models are newly added in P Series line-up. The diverse selection enables the base solution for both customer and location.

PKA-M KA

PKA-M HA

PKA-M KAL

PKA-M HAL

## Flat Panel & Pure White Finish

A flat panel layout has been adopted for all models. Pursuing a design that harmonizes with virtually any interior, the unit colour has been changed from white to pure white.

PKA-M HA(L)

PKA-M KA(L)

## ErP Lot 10 Compliant with High Energy-efficiency Achieving SEER/SCOP Rank A, A+ and A++

Highly efficient indoor unit heat exchangers and and newly designed power inverters (PUHZ-ZM) contribute to an amazing reduction in electricity consumption throughout a year, and have resulted in models in the full-capacity range attaining the rank A, A+ and A++ energy savings rating.

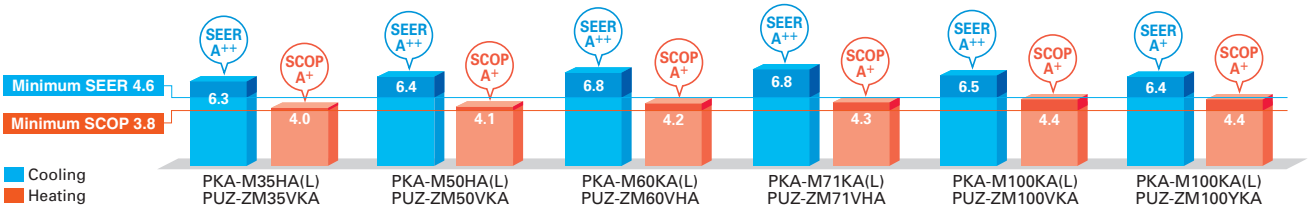


## Drain Pump Option Available with All Models

Installation of the drain pump enables a drain outlet as high as 800mm above the base of the indoor unit. Drain water can be discharged easily even if the surface where the wall-mounted unit does not have direct access outside, increasing the degree of freedom for installation.

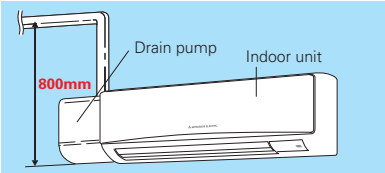


## Multi-function Wired Remote Controller

In addition to using the wireless remote controller that comes as standard equipment, PAR-40MAA and PAC-YT52CRA wired remote controllers can be used as well.

✻Connection to PAR-40MAA/PAC-YT52CRA requires PAC-SH29TC-E (optional).

### Main Functions

- Night Setback
- Energy- saving Mode
- Multi Language
- Weekly Timer
- Refrigerant Leak Check

✻For details, please refer to page 183.

## SERIES SELECTION

### Power Inverter Series

**Indoor Unit**

R32
R410A

PKA-M35/50HA(L)

R32
R410A

PKA-M60/71/100KA(L)

**Outdoor Unit**

R32

For Single

PUZ-ZM35/50

PUZ-ZM60/71

PUZ-ZM100/125/140

R32

For Multi
(Twin/Triple/Quadruple)

PUZ-ZM71

PUZ-ZM100/125/140/200/250

**Remote Controller**

Optional (✻)

Optional

Optional (✻)

(✻) PAC-SH29TC-E is required (optional)

## PKA-M HA(L)/KA(L) Indoor Unit Combinations

Indoor unit combinations shown below are possible.

| Indoor Unit Combination | Outdoor Unit Capacity | | | | | | | | | | | | | | | | | | | |
|---|---|---|---|---|---|---|---|---|---|---|---|---|---|---|---|---|---|---|---|---|
| | For Single | | | | | | | | | For Twin | | | | | | For Triple | | | For Quadruple | |
| | 35 | 50 | 60 | 71 | 100 | 125 | 140 | 200 | 250 | 71 | 100 | 125 | 140 | 200 | 250 | 140 | 200 | 250 | 200 | 250 |
| Power Inverter (PUHZ-ZRP) | 35x1 | 50x1 | 60x1 | 71x1 | 100x1 | – | – | – | – | 35x2 | 50x2 | 60x2 | 71x2 | 100x2 | – | 50x3 | 60x3 | 71x3 | 50x4 | 60x4 |
| Distribution Pipe | – | – | – | – | – | – | – | – | – | MSDD-50TR2-E | | | | MSDD-50WR2-E | – | MSDT-111R3-E | | | MSDF-1111R2-E | |

## SERIES SELECTION

### Standard Inverter Series

**Indoor Unit**

R32
R410A

PKA-M35/50HA(L)

PKA-M60/71/100KA(L)

**Outdoor Unit**

R32

For Single

PUZ-M100

R32

For Multi
(Twin/Triple/Quadruple)

PUZ-M100/125/140

PUZ-M200/250

**Remote Controller**

Optional (✻)

Optional

Optional (✻)

(✻) PAC-SH29TC-E is required (optional)

## PKA-M HA/KA Indoor Unit Combinations

Indoor unit combinations shown below are possible.

| Indoor Unit Combination | Outdoor Unit Capacity | | | | | | | | | | | | | | | | | | | |
|---|---|---|---|---|---|---|---|---|---|---|---|---|---|---|---|---|---|---|---|---|
| | For Single | | | | | | | | | For Twin | | | | | | For Triple | | | For Quadruple | |
| | 35 | 50 | 60 | 71 | 100 | 125 | 140 | 200 | 250 | 71 | 100 | 125 | 140 | 200 | 250 | 140 | 200 | 250 | 200 | 250 |
| Standard Inverter (PUHZ-P) | – | – | – | – | 100x1 | – | – | – | – | – | 50x2 | 60x2 | 71x2 | 100x2 | – | 50x3 | 60x3 | 71x3 | 50x4 | 60x4 |
| Distribution Pipe | – | – | – | – | – | – | – | – | – | – | MSDD-50TR2-E | | | MSDD-50WR2-E | – | MSDT-111R3-E | | | MSDF-1111R2-E | |

# PKA-M SERIES

## POWER INVERTER

Demand Control (Optional) | Pure White | AUTO VANE | Check! (Optional) | SWING | AUTO | ACO | Auto Restart | Low Temp Cooling | Silent | Ampere Limit (60-140V/200/250) | Rotation Back-up (Optional) | (Optional) | Group Control (Optional) | M-NET connection (Optional)

Wi-Fi Interface (Optional) | COMPO | Cleaning-free, pipe reuse | Wiring Reuse (Optional) | Drain Lift Up (Optional) | Pump Down | Flare connection | Self Diagnosis | Failure Recall

| Type | | | | Inverter Heat Pump | | | | | |
|---|---|---|---|---|---|---|---|---|---|
| Indoor Unit | | | | PKA-M35HA(L) | PKA-M50HA(L) | PKA-M60KA(L) | PKA-M71KA(L) | PKA-M100KA(L) | |
| Outdoor Unit | | | | PUZ-ZM35VKA | PUZ-ZM50VKA | PUZ-ZM60VHA | PUZ-ZM71VHA | PUZ-ZM100VKA | PUZ-ZM100YKA |
| Refrigerant | | | | R32*1 | | | | | |
| Power Supply | Source | | | Outdoor power supply | | | | | |
| | Outdoor (V/Phase/Hz) | | | VKA • VHA:230 / Single / 50, YKA:400 / Three / 50 | | | | | |
| Cooling | Capacity | Rated | kW | 3.6 | 4.6 | 6.1 | 7.1 | 9.5 | 9.5 |
| | | Min - Max | kW | 1.6 - 4.5 | 2.3 - 5.6 | 2.7 - 6.7 | 3.3 - 8.1 | 4.9 - 11.4 | 4.9 - 11.4 |
| | Total Input | Rated | kW | 0.869 | 1.239 | 1.560 | 1.863 | 2.405 | 2.405 |
| | EER | | | 4.14 | 3.71 | 3.91 | 3.81 | 3.95 | 3.95 |
| | | EEL Rank | | – | – | – | – | – | – |
| | Design Load | | kW | 3.6 | 4.6 | 6.1 | 7.1 | 9.5 | 9.5 |
| | Annual Electricity Consumption*2 | | kWh/a | 200 | 251 | 313 | 364 | 508 | 519 |
| | SEER | | | 6.3 | 6.4 | 6.8 | 6.8 | 6.5 | 6.4 |
| | | Energy Efficiency Class | | A++ | A++ | A++ | A++ | A++ | A++ |
| Heating (Average Season) | Capacity | Rated | kW | 4.1 | 5.0 | 7.0 | 8.0 | 11.2 | 11.2 |
| | | Min - Max | kW | 1.6 - 5.2 | 2.5 - 7.3 | 2.8 - 8.2 | 3.5 - 10.2 | 4.5 - 14.0 | 4.5 - 14.0 |
| | Total Input | Rated | kW | 1.040 | 1.347 | 1.732 | 2.116 | 3.102 | 3.102 |
| | COP | | | 3.94 | 3.71 | 4.04 | 3.78 | 3.61 | 3.61 |
| | | EEL Rank | | – | – | – | – | – | – |
| | Design Load | | kW | 2.4 | 3.3 | 4.4 | 4.7 | 7.8 | 7.8 |
| | Declared Capacity | at reference design temperature | kW | 2.4 (–10°C) | 3.3 (–10°C) | 4.4 (–10°C) | 4.7 (–10°C) | 7.8 (–10°C) | 7.8 (–10°C) |
| | | at bivalent temperature | kW | 2.4 (–10°C) | 3.3 (–10°C) | 4.4 (–10°C) | 4.7 (–10°C) | 7.8 (–10°C) | 7.8 (–10°C) |
| | | at operation limit temperature | kW | 2.2 (–11°C) | 3.2 (–11°C) | 2.8 (–20°C) | 3.5 (–20°C) | 5.8 (–20°C) | 5.8 (–20°C) |
| | Back Up Heating Capacity | | kW | 0 | 0 | 0 | 0 | 0 | 0 |
| | Annual Electricity Consumption*2 | | kWh/a | 839 | 1115 | 1460 | 1523 | 2472 | 2472 |
| | SCOP | | | 4.0 | 4.1 | 4.2 | 4.3 | 4.4 | 4.4 |
| | | Energy Efficiency Class | | A+ | A+ | A+ | A+ | A+ | A+ |
| Operating Current (max) | | | A | 13.4 | 13.4 | 19.4 | 19.4 | 27.1 | 8.6 |
| Indoor Unit | Input | Rated | kW | 0.04 / 0.03 | 0.04 / 0.03 | 0.06 / 0.05 | 0.06 / 0.05 | 0.08 / 0.07 | 0.08 / 0.07 |
| | Operating Current (max) | | A | 0.40 | 0.40 | 0.43 | 0.43 | 0.57 | 0.57 |
| | Dimensions <Panel> | H × W × D | mm | 295 - 898 - 249 | | 365 - 1170 - 295 | | | |
| | Weight <Panel> | | kg | 13 | 13 | 21 | 21 | 21 | 21 |
| | Air Volume [Lo-Mid-Hi] | | m³/min | 9 - 10.5 - 12 | 9 - 10.5 - 12 | 18 - 20 - 22 | 18 - 20 - 22 | 20 - 23 - 26 | 20 - 23 - 26 |
| | Sound Level (SPL) [Lo-Mid-Hi] | | dB(A) | 36 - 40 - 43 | 36 - 40 - 43 | 39 - 42 - 45 | 39 - 42 - 45 | 41 - 45 - 49 | 41 - 45 - 49 |
| | Sound Level (PWL) | | dB(A) | 60 | 60 | 64 | 64 | 65 | 65 |
| Outdoor Unit | Dimensions | H × W × D | mm | 630 - 809 - 300 | | 943 - 950 - 330 (+25) | | 1338 - 1050 - 330 (+40) | |
| | Weight | | kg | 46 | 46 | 70 | 70 | 116 | 123 |
| | Air Volume | Cooling | m³/min | 45 | 45 | 55 | 55 | 110 | 110 |
| | | Heating | m³/min | 45 | 45 | 55 | 55 | 110 | 110 |
| | Sound Level (SPL) | Cooling | dB(A) | 44 | 44 | 47 | 47 | 49 | 49 |
| | | Heating | dB(A) | 46 | 46 | 49 | 49 | 51 | 51 |
| | Sound Level (PWL) | Cooling | dB(A) | 65 | 65 | 67 | 67 | 69 | 69 |
| | Operating Current (max) | | A | 13.0 | 13.0 | 19.0 | 19.0 | 26.5 | 8.0 |
| | Breaker Size | | A | 16 | 16 | 25 | 25 | 32 | 16 |
| Ext. Piping | Diameter | Liquid / Gas | mm | 6.35 / 12.7 | 6.35 / 12.7 | 9.52 / 15.88 | 9.52 / 15.88 | 9.52 / 15.88 | 9.52 / 15.88 |
| | Max. Length | Out-In | m | 50 | 50 | 55 | 55 | 100 | 100 |
| | Max. Height | Out-In | m | 30 | 30 | 30 | 30 | 30 | 30 |
| Guaranteed Operating Range [Outdoor] | | Cooling*3 | °C | –15 ~ +46 | –15 ~ +46 | –15 ~ +46 | –15 ~ +46 | –15 ~ +46 | –15 ~ +46 |
| | | Heating | °C | –11 ~ +21 | –11 ~ +21 | –20 ~ +21 | –20 ~ +21 | –20 ~ +21 | –20 ~ +21 |

*1 Refrigerant leakage contributes to climate change. Refrigerant with lower global warming potential (GWP) would contribute less to global warming than a refrigerant with higher GWP, if leaked to the atmosphere. This appliance contains a refrigerant fluid with a GWP equal to 550. This means that if 1 kg of this refrigerant fluid would be leaked to the atmosphere, the impact on global warming would be 550 times higher than 1 kg of $CO_2$, over a period of 100 years. Never try to interfere with the refrigerant circuit yourself or disassemble the product yourself and always ask a professional. The GWP of R32 is 675 in the IPCC 4th Assessment Report.
*2 Energy consumption based on standard test results. Actual energy consumption will depend on how the appliance is used and where it is located.
*3 Optional air protection guide is required where ambient temperature is lower than –5°C.

# PKA-M SERIES

## STANDARD INVERTER

Demand Control (Optional) | Pure White | AUTO VANE | Check! (Optional) | SWING | AUTO | ACO | Auto Restart | Low Temp Cooling | Silent | Ampere Limit (60-140V/200/250) | Rotation Back-up (Optional) | (Optional) | Group Control (Optional) | M-NET connection (Optional)

Wi-Fi Interface (Optional) | COMPO | Cleaning-free, pipe reuse | Wiring Reuse (Optional) | Drain Lift Up (Optional) | Pump Down | Flare connection | Self Diagnosis | Failure Recall

| Type | | | | Inverter Heat Pump | |
|---|---|---|---|---|---|
| Indoor Unit | | | | PKA-M100KA(L) | |
| Outdoor Unit | | | | PUZ-M100VKA | PUZ-M100YKA |
| Refrigerant | | | | R32*1 | |
| Power Supply | Source | | | Outdoor power supply | |
| | Outdoor (V/Phase/Hz) | | | 230 / Single / 50 | 400 / Three /50 |
| Cooling | Capacity | Rated | kW | 9.5 | 9.5 |
| | | Min - Max | kW | 4.0 - 10.6 | 4.0 - 10.6 |
| | Total Input | Rated | kW | 2.94 | 2.94 |
| | EER | | | 3.23 | 3.23 |
| | | EEL Rank | | – | – |
| | Design Load | | kW | 9.5 | 9.5 |
| | Annual Electricity Consumption*2 | | kWh/a | 572 | 572 |
| | SEER | | | 5.8 | 5.8 |
| | | Energy Efficiency Class | | A+ | A+ |
| Heating (Average Season) | Capacity | Rated | kW | 11.2 | 11.2 |
| | | Min - Max | kW | 2.8 - 12.5 | 2.8 - 12.5 |
| | Total Input | Rated | kW | 3.28 | 3.28 |
| | COP | | | 3.41 | 3.41 |
| | | EEL Rank | | – | – |
| | Design Load | | kW | 8.0 | 8.0 |
| | Declared Capacity | at reference design temperature | kW | 6.0 (–10°C) | 6.0 (–10°C) |
| | | at bivalent temperature | kW | 7.0 (–7°C) | 7.0 (–7°C) |
| | | at operation limit temperature | kW | 4.5 (–15°C) | 4.5 (–15°C) |
| | Back Up Heating Capacity | | kW | 2.0 | 2.0 |
| | Annual Electricity Consumption*2 | | kWh/a | 2797 | 2797 |
| | SCOP | | | 4.0 | 4.0 |
| | | Energy Efficiency Class | | A+ | A+ |
| Operating Current (max) | | | A | 20.6 | 12.1 |
| Indoor Unit | Input | Rated | kW | 0.08 | 0.08 |
| | Operating Current (max) | | A | 0.57 | 0.57 |
| | Dimensions <Panel> | H × W × D | mm | 365 - 1170 - 295 | 365 - 1170 - 295 |
| | Weight <Panel> | | kg | 21 | 21 |
| | Air Volume [Lo-Mid-Hi] | | m³/min | 20 - 23 - 26 | 20 - 23 - 26 |
| | Sound Level (SPL) [Lo-Mid-Hi] | | dB(A) | 41 - 45 - 49 | 41 - 45 - 49 |
| | Sound Level (PWL) | | dB(A) | 65 | 65 |
| Outdoor Unit | Dimensions | H × W × D | mm | 981 - 1050 - 330 (+40) | 981 - 1050 - 330 (+40) |
| | Weight | | kg | 76 | 78 |
| | Air Volume | Cooling | m³/min | 79.0 | 79.0 |
| | | Heating | m³/min | 79.0 | 79.0 |
| | Sound Level (SPL) | Cooling | dB(A) | 51 | 51 |
| | | Heating | dB(A) | 54 | 54 |
| | Sound Level (PWL) | Cooling | dB(A) | 70 | 70 |
| | Operating Current (max) | | A | 20.0 | 11.5 |
| | Breaker Size | | A | 32 | 16 |
| Ext. Piping | Diameter | Liquid / Gas | mm | 9.52 / 15.88 | 9.52 / 15.88 |
| | Max. Length | Out-In | m | 55 | 55 |
| | Max. Height | Out-In | m | 30 | 30 |
| Guaranteed Operating Range [Outdoor] | | Cooling*3 | °C | –15 ~ +46 | –15 ~ +46 |
| | | Heating | °C | –15 ~ +21 | –15 ~ +21 |

*1 Refrigerant leakage contributes to climate change. Refrigerant with lower global warming potential (GWP) would contribute less to global warming than a refrigerant with higher GWP, if leaked to the atmosphere. This appliance contains a refrigerant fluid with a GWP equal to 550. This means that if 1 kg of this refrigerant fluid would be leaked to the atmosphere, the impact on global warming would be 550 times higher than 1 kg of $CO_2$, over a period of 100 years. Never try to interfere with the refrigerant circuit yourself or disassemble the product yourself and always ask a professional. The GWP of R32 is 675 in the IPCC 4th Assessment Report.
*2 Energy consumption based on standard test results. Actual energy consumption will depend on how the appliance is used and where it is located.
*3 Optional air protection guide is required where ambient temperature is lower than –5°C.

# SERIES SELECTION

## Power Inverter Series

DC Inverter | 35-71 Joint Lap | Vector Sine Wave | 100-250 DC Scroll | DC Fan Motor | Vector-Wave | 35-140 PAM | Power Receiver | Grooved Piping | 35-71 Heat Caulking Fixing Method

### Indoor Unit

R32
R410A

PKA-M35/50HA(L)

PKA-M60/71/100KA(L)

### Outdoor Unit

R410A

For Single

PUHZ-ZRP35/50

PUHZ-ZRP60/71

PUHZ-ZRP100

R410A

For Multi
(Twin/Triple/Quadruple)

PUHZ-ZRP71

PUHZ-ZRP100/125/140/200/250

### Remote Controller

Optional (✻)

Optional

Optional (✻)

## Standard Inverter Series

DC Inverter | 100-250 Vector Sine Wave | 100-140 DC Rotary | 200/250 DC Scroll | DC Fan Motor | 100-250 Vector-Wave | 100-140 PAM | Grooved Piping

### Indoor Unit

R32
R410A

PKA-M35/50HA(L)

PKA-M60/71/100KA(L)

### Outdoor Unit

R410A

For Single

PUHZ-P100

R410A

For Multi
(Twin/Triple/Quadruple)

PUHZ-P100/125/140

PUHZ-P200/250

### Remote Controller

Optional (✻)

Optional

Optional (✻)

(✻) PAC-SH29TC-E is required (optional)

## PKA-M HA/KA Indoor Unit Combinations

Indoor unit combinations shown below are possible.

| Indoor Unit Combination | | Outdoor Unit Capacity | | | | | | | | | | | | | | | | | | | |
|---|---|---|---|---|---|---|---|---|---|---|---|---|---|---|---|---|---|---|---|---|---|
| | | For Single | | | | | | | | | For Twin | | | | | | For Triple | | | For Quadruple | |
| | | 35 | 50 | 60 | 71 | 100 | 125 | 140 | 200 | 250 | 71 | 100 | 125 | 140 | 200 | 250 | 140 | 200 | 250 | 200 | 250 |
| Power Inverter (PUHZ-ZRP) | | 35x1 | 50x1 | 60x1 | 71x1 | 100x1 | – | – | – | – | 35x2 | 50x2 | 60x2 | 71x2 | 100x2 | – | 50x3 | 60x3 | 71x3 | 50x4 | 60x4 |
| | Distribution Pipe | – | – | – | – | – | – | – | – | – | MSDD-50TR-E | | | | MSDD-50WR-E | – | MSDT-111R-E | | | MSDF-1111R-E | |
| Standard Inverter (PUHZ-P) | | – | – | – | – | 100x1 | – | – | – | – | – | 50x2 | 60x2 | 71x2 | 100x2 | – | 50x3 | 60x3 | 71x3 | 50x4 | 60x4 |
| | Distribution Pipe | – | – | – | – | – | – | – | – | – | – | MSDD-50TR-E | | | MSDD-50WR-E | – | MSDT-111R-E | | | MSDF-1111R-E | |

# PKA-M SERIES
## POWER INVERTER

Demand Control (Optional) | Pure White | AUTO VANE | Check! (Optional) | SWING | AUTO | ACO | Auto Restart | Low Temp Cooling | Silent | Ampere Limit (60-140V/200/250) | Rotation Back-up (Optional) | (Optional) | Group Control (Optional) | M-NET connection (Optional)

Wi-Fi Interface (Optional) | COMPO | Cleaning-free pipe reuse | Wiring Reuse (Optional) | Drain Lift Up (Optional) | Pump Down | Flare connection | Self Diagnosis | Failure Recall

| Type | | | | Inverter Heat Pump | | | | | |
|---|---|---|---|---|---|---|---|---|---|
| Indoor Unit | | | | PKA-M35HA(L) | PKA-M50HA(L) | PKA-M60KA(L) | PKA-M71KA(L) | PKA-M100KA(L) | |
| Outdoor Unit | | | | PUHZ-ZRP35VKA2 | PUHZ-ZRP50VKA2 | PUHZ-ZRP60VHA2 | PUHZ-ZRP71VHA2 | PUHZ-ZRP100VKA3 | PUHZ-ZRP100YKA3 |
| Refrigerant | | | | R410A*1 | | | | | |
| Power Supply | Source | | | Outdoor power supply | | | | | |
| | Outdoor (V/Phase/Hz) | | | VKA • VHA:230 / Single / 50, YKA:400 / Three / 50 | | | | | |
| Cooling | Capacity | Rated | kW | 3.6 | 4.6 | 6.1 | 7.1 | 9.5 | 9.5 |
| | | Min - Max | kW | 1.6 - 4.5 | 2.3 - 5.6 | 2.7 - 6.7 | 3.3 - 8.1 | 4.9 - 11.4 | 4.9 - 11.4 |
| | Total Input | Rated | kW | 0.94 | 1.41 | 1.60 | 1.80 | 2.40 | 2.40 |
| | EER | | | 3.83 | 3.26 | 3.81 | 3.94 | 3.96 | 3.96 |
| | | EEL Rank | | – | – | – | – | – | – |
| | Design Load | | kW | 3.6 | 4.6 | 6.1 | 7.1 | 9.5 | 9.5 |
| | Annual Electricity Consumption*2 | | kWh/a | 214 | 296 | 324 | 368 | 522 | 533 |
| | SEER | | | 5.9 | 5.4 | 6.5 | 6.7 | 6.3 | 6.2 |
| | | Energy Efficiency Class | | A+ | A | A++ | A++ | A++ | A++ |
| Heating (Average Season) | Capacity | Rated | kW | 4.1 | 5.0 | 7.0 | 8.0 | 11.2 | 11.2 |
| | | Min - Max | kW | 1.6 - 5.2 | 2.5 - 7.3 | 2.8 - 8.2 | 3.5 - 10.2 | 4.5 - 14.0 | 4.5 - 14.0 |
| | Total Input | Rated | kW | 1.07 | 1.50 | 1.96 | 2.19 | 3.04 | 3.04 |
| | COP | | | 3.83 | 3.33 | 3.57 | 3.65 | 3.68 | 3.68 |
| | | EEL Rank | | – | – | – | – | – | – |
| | Design Load | | kW | 2.4 | 3.3 | 4.4 | 4.7 | 7.8 | 7.8 |
| | Declared Capacity | at reference design temperature | kW | 2.4 (–10°C) | 3.3 (–10°C) | 4.4 (–10°C) | 4.7 (–10°C) | 7.8 (–10°C) | 7.8 (–10°C) |
| | | at bivalent temperature | kW | 2.4 (–10°C) | 3.3 (–10°C) | 4.4 (–10°C) | 4.7 (–10°C) | 7.8 (–10°C) | 7.8 (–10°C) |
| | | at operation limit temperature | kW | 2.2 (–11°C) | 3.2 (–11°C) | 2.8 (–20°C) | 3.5 (–20°C) | 5.8 (–20°C) | 5.8 (–20°C) |
| | Back Up Heating Capacity | | kW | 0 | 0 | 0 | 0 | 0 | 0 |
| | Annual Electricity Consumption*2 | | kWh/a | 847 | 1160 | 1473 | 1532 | 2608 | 2608 |
| | SCOP | | | 3.9 | 4.0 | 4.2 | 4.3 | 4.1 | 4.1 |
| | | Energy Efficiency Class | | A | A+ | A+ | A+ | A+ | A+ |
| Operating Current (max) | | | A | 13.4 | 13.4 | 19.4 | 19.4 | 27.1 | 8.6 |
| Indoor Unit | Input | Rated | kW | 0.04 | 0.04 | 0.06 | 0.06 | 0.08 | 0.08 |
| | Operating Current (max) | | A | 0.4 | 0.4 | 0.43 | 0.43 | 0.57 | 0.57 |
| | Dimensions <Panel> | H × W × D | mm | 295 - 898 - 249 | | 365 - 1170 - 295 | | | |
| | Weight <Panel> | | kg | 13 | 13 | 21 | 21 | 21 | 21 |
| | Air Volume [Lo-Mid-Hi] | | m³/min | 9 - 10.5 - 12 | 9 - 10.5 - 12 | 18 - 20 - 22 | 18 - 20 - 22 | 20 - 23 - 26 | 20 - 23 - 26 |
| | Sound Level (SPL) [Lo-Mid-Hi] | | dB(A) | 36 - 40 - 43 | 36 - 40 - 43 | 39 - 42 - 45 | 39 - 42 - 45 | 41 - 45 - 49 | 41 - 45 - 49 |
| | Sound Level (PWL) | | dB(A) | 60 | 60 | 64 | 64 | 65 | 65 |
| Outdoor Unit | Dimensions | H × W × D | mm | 630 - 809 - 300 | | 943 - 950 - 330 (+30) | | 1338 - 1050 - 330 (+40) | |
| | Weight | | kg | 43 | 46 | 70 | 70 | 116 | 123 |
| | Air Volume | Cooling | m³/min | 45 | 45 | 55 | 55 | 110 | 110 |
| | | Heating | m³/min | 45 | 45 | 55 | 55 | 110 | 110 |
| | Sound Level (SPL) | Cooling | dB(A) | 44 | 44 | 47 | 47 | 49 | 49 |
| | | Heating | dB(A) | 46 | 46 | 48 | 48 | 51 | 51 |
| | Sound Level (PWL) | Cooling | dB(A) | 65 | 65 | 67 | 67 | 69 | 69 |
| | Operating Current (max) | | A | 13.0 | 13.0 | 19.0 | 19.0 | 26.5 | 8.0 |
| | Breaker Size | | A | 16 | 16 | 25 | 25 | 32 | 16 |
| Ext. Piping | Diameter | Liquid / Gas | mm | 6.35 / 12.7 | 6.35 / 12.7 | 9.52 / 15.88 | 9.52 / 15.88 | 9.52 / 15.88 | 9.52 / 15.88 |
| | Max. Length | Out-In | m | 50 | 50 | 50 | 50 | 75 | 75 |
| | Max. Height | Out-In | m | 30 | 30 | 30 | 30 | 30 | 30 |
| Guaranteed Operating Range [Outdoor] | | Cooling*3 | °C | –15 ~ +46 | –15 ~ +46 | –15 ~ +46 | –15 ~ +46 | –15 ~ +46 | –15 ~ +46 |
| | | Heating | °C | –11 ~ +21 | –11 ~ +21 | –20 ~ +21 | –20 ~ +21 | –20 ~ +21 | –20 ~ +21 |

*1 Refrigerant leakage contributes to climate change. Refrigerant with lower global warming potential (GWP) would contribute less to global warming than a refrigerant with higher GWP, if leaked to the atmosphere. This appliance contains a refrigerant fluid with a GWP equal to 1975. This means that if 1 kg of this refrigerant fluid would be leaked to the atmosphere, the impact on global warming would be 1975 times higher than 1 kg of $CO_2$, over a period of 100 years. Never try to interfere with the refrigerant circuit yourself or disassemble the product yourself and always ask a professional.
The GWP of R410A is 2088 in the IPCC 4th Assessment Report.
*2 Energy consumption based on standard test results. Actual energy consumption will depend on how the appliance is used and where it is located.
*3 Optional air protection guide is required where ambient temperature is lower than –5°C.

# PKA-M SERIES
## STANDARD INVERTER

Demand Control (Optional) | Pure White | AUTO VANE | Check! (Optional) | SWING | AUTO | ACO | Auto Restart | Low Temp Cooling | Silent | Rotation Back-up (Optional) | (Optional) | Group Control (Optional) | M-NET connection (Optional) | Wi-Fi Interface (Optional)

COMPO | Cleaning-free pipe reuse | Wiring Reuse (Optional) | Drain Lift Up (Optional) | Pump Down | Flare connection | Self Diagnosis | Failure Recall

| Type | | | | Inverter Heat Pump | |
|---|---|---|---|---|---|
| Indoor Unit | | | | PKA-M100KA(L) | |
| Outdoor Unit | | | | PUHZ-P100VKA | PUHZ-P100YKA |
| Refrigerant | | | | R410A*1 | |
| Power Supply | Source | | | Outdoor power supply | |
| | Outdoor (V/Phase/Hz) | | | 230 / Single / 50 | 400 / Three / 50 |
| Cooling | Capacity | Rated | kW | 9.4 | 9.4 |
| | | Min - Max | kW | 3.7 - 10.6 | 3.7 - 10.6 |
| | Total Input | Rated | kW | 3.12 | 3.12 |
| | EER | | | 3.01 | 3.01 |
| | | EEL Rank | | – | – |
| | Design Load | | kW | 9.4 | 9.4 |
| | Annual Electricity Consumption*2 | | kWh/a | 586 | 586 |
| | SEER | | | 5.6 | 5.6 |
| | | Energy Efficiency Class | | A+ | A+ |
| Heating (Average Season) | Capacity | Rated | kW | 11.2 | 11.2 |
| | | Min - Max | kW | 2.8 - 12.5 | 2.8 - 12.5 |
| | Total Input | Rated | kW | 3.48 | 3.48 |
| | COP | | | 3.21 | 3.21 |
| | | EEL Rank | | – | – |
| | Design Load | | kW | 8.0 | 8.0 |
| | Declared Capacity | at reference design temperature | kW | 6.0 (–10°C) | 6.0 (–10°C) |
| | | at bivalent temperature | kW | 7.0 (–7°C) | 7.0 (–7°C) |
| | | at operation limit temperature | kW | 4.5 (–15°C) | 4.5 (–15°C) |
| | Back Up Heating Capacity | | kW | 2.0 | 2.0 |
| | Annual Electricity Consumption*2 | | kWh/a | 2795 | 2795 |
| | SCOP | | | 4.0 | 4.0 |
| | | Energy Efficiency Class | | A+ | A+ |
| Operating Current (max) | | | A | 20.6 | 12.1 |
| Indoor Unit | Input | Rated | kW | 0.08 | 0.08 |
| | Operating Current (max) | | A | 0.57 | 0.57 |
| | Dimensions <Panel> | H × W × D | mm | 365 - 1170 - 295 | |
| | Weight <Panel> | | kg | 21 | 21 |
| | Air Volume [Lo-Mid-Hi] | | m³/min | 20 - 23 - 26 | 20 - 23 - 26 |
| | Sound Level (SPL) [Lo-Mid-Hi] | | dB(A) | 41 - 45 - 49 | 41 - 45 - 49 |
| | Sound Level (PWL) | | dB(A) | 65 | 65 |
| Outdoor Unit | Dimensions | H × W × D | mm | 981 - 1050 - 330 | |
| | Weight | | kg | 76 | 78 |
| | Air Volume | Cooling | m³/min | 79 | 79 |
| | | Heating | m³/min | 79 | 79 |
| | Sound Level (SPL) | Cooling | dB(A) | 51 | 51 |
| | | Heating | dB(A) | 54 | 54 |
| | Sound Level (PWL) | Cooling | dB(A) | 70 | 70 |
| | Operating Current (max) | | A | 20.0 | 11.5 |
| | Breaker Size | | A | 32 | 16 |
| Ext. Piping | Diameter | Liquid / Gas | mm | 9.52 / 15.88 | 9.52 / 15.88 |
| | Max. Length | Out-In | m | 50 | 50 |
| | Max. Height | Out-In | m | 30 | 30 |
| Guaranteed Operating Range [Outdoor] | | Cooling*3 | °C | –15 ~ +46 | –15 ~ +46 |
| | | Heating | °C | –15 ~ +21 | –15 ~ +21 |

*1 Refrigerant leakage contributes to climate change. Refrigerant with lower global warming potential (GWP) would contribute less to global warming than a refrigerant with higher GWP, if leaked to the atmosphere. This appliance contains a refrigerant fluid with a GWP equal to 1975. This means that if 1 kg of this refrigerant fluid would be leaked to the atmosphere, the impact on global warming would be 1975 times higher than 1 kg of $CO_2$, over a period of 100 years. Never try to interfere with the refrigerant circuit yourself or disassemble the product yourself and always ask a professional.
The GWP of R410A is 2088 in the IPCC 4th Assessment Report.
*2 Energy consumption based on standard test results. Actual energy consumption will depend on how the appliance is used and where it is located.
*3 Optional air protection guide is required where ambient temperature is lower than –5°C.

# PCA–KA SERIES

R32
R410A

PCA-M35/50/60/71/100/125/140KA

A stylish new indoor unit design and airflow settings for both high- and low-ceiling interiors expand installation possibilities. Together with exceptional energy-saving performance, these units are the solution to diversified air conditioning needs.

## Stylish Indoor Unit Design

A stylish square-like design is adopted for the indoor units of all models. As a result, the units blend in better with the ceiling.

PCA-KA

## ErP Lot 10 Compliant with High Energy-efficiency Achieving SEER/SCOP Rank A, A+ and A++

A direct-current (DC) fan motor is isntalled in the indoor unit, increasing the seasonal energy efficiency of newly designed Power Inverter series (PUHZ-ZM) and resulting in the full capacity models comply ErP Lot 10 with energy ranking A+/A++ for cooling and A/A+ for heating. This contribute to an impressive reduction in the cost of annual electricity.

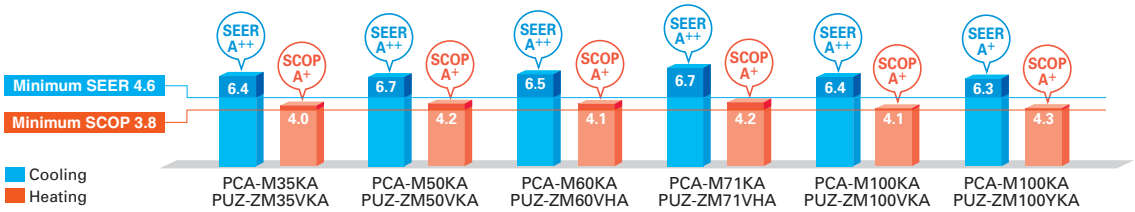


## Optional Drain Pump for Full-capacity Models

The pumping height of the optional drain pump has been increased from 400mm to 600mm, expanding flexibility in choosing unit location during installation work.

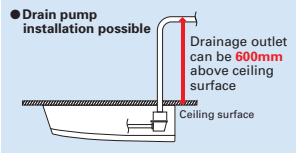


## Outside-air Intake

Units are equipped with a knock-out hole that enables the induction of fresh outside-air.

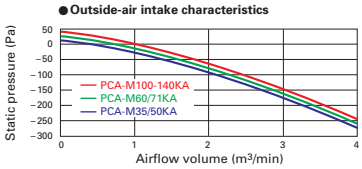


## Equipped with Automatic Air-speed Adjustment

In addition to the conventional 4-speed setting, units are now equipped with an automatic air-speed adjustment mode. This setting automatically adjusts the air-speed to conditions that match the room environment. At the start of heating/cooling operation, the airflow is set to high-speed to quickly heat/cool the room. When the room temperature reaches the desired setting, the airflow speed is decreased automatically for stable comfortable heating/cooling operation.

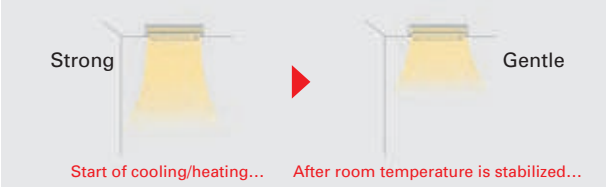


## Equipped with High- /Low-ceiling Modes

Units are equipped with high- and low-ceiling operation modes that make it possible to switch the airflow volume to match room height. The ability to choose the optimum airflow volume makes it possible to optimize the breezy sensation felt throughout the room.

| Capacity | High ceiling | Standard ceiling | Low ceiling |
|---|---|---|---|
| 35 | 3.5m | 2.7m | 2.5m |
| 50 | 3.5m | 2.7m | 2.5m |
| 60 | 3.5m | 2.7m | 2.5m |
| 71 | 3.5m | 2.7m | 2.5m |
| 100 | 4.2m | 3.0m | 2.6m |
| 125 | 4.2m | 3.0m | 2.6m |
| 140 | 4.2m | 3.0m | 2.6m |

# SERIES SELECTION

## Power Inverter Series

### Indoor Unit

R32

R410A

PCA-M35/50/60/71/100/125/140KA

### Outdoor Unit

R32

For Single

PUZ-ZM35/50

PUZ-ZM60/71

PUZ-ZM100/125/140

R32

For Multi
(Twin/Triple/Quadruple)

PUZ-ZM71

PUZ-ZM100/125/140/200/250

### Remote Controller

Optional

Optional

Optional

Optional

## PCZ-M KA Indoor Unit Combinations

Indoor unit combinations shown below are possible.

| Indoor Unit Combination | Outdoor Unit Capacity | | | | | | | | | | | | | | | | | | | |
|---|---|---|---|---|---|---|---|---|---|---|---|---|---|---|---|---|---|---|---|---|
| | For Single | | | | | | | | | For Twin | | | | | | For Triple | | | For Quadruple | |
| | 35 | 50 | 60 | 71 | 100 | 125 | 140 | 200 | 250 | 71 | 100 | 125 | 140 | 200 | 250 | 140 | 200 | 250 | 200 | 250 |
| Power Inverter (PUHZ-ZRP) | 35x1 | 50x1 | 60x1 | 71x1 | 100x1 | 125x1 | 140x1 | – | – | 35x2 | 50x2 | 60x2 | 71x2 | 100x2 | 125x2 | 50x3 | 60x3 | 71x3 | 50x4 | 60x4 |
| Distribution Pipe | – | – | – | – | – | – | – | – | – | MSDD-50TR2-E | | | | MSDD-50WR2-E | | MSDT-111R3-E | | | MSDF-1111R2-E | |

# SERIES SELECTION

## Standard Inverter Series

### Indoor Unit

R32

R410A

PCA-M35/50/60/71/100/125/140KA

### Outdoor Unit

R32

For Single

SUZ-M35

SUZ-M50

SUZ-M60/71

PUZ-M100/125/140

R32

For Multi
(Twin/Triple/Quadruple)

PUZ-M100/125/140

PUZ-M200/250

### Remote Controller

Optional

Optional

Optional

Optional

## PCZ-M KA Indoor Unit Combinations

Indoor unit combinations shown below are possible.

| Indoor Unit Combination | Outdoor Unit Capacity | | | | | | | | | | | | | | | | | | | |
|---|---|---|---|---|---|---|---|---|---|---|---|---|---|---|---|---|---|---|---|---|
| | For Single | | | | | | | | | For Twin | | | | | | For Triple | | | For Quadruple | |
| | 35 | 50 | 60 | 71 | 100 | 125 | 140 | 200 | 250 | 71 | 100 | 125 | 140 | 200 | 250 | 140 | 200 | 250 | 200 | 250 |
| Standard Inverter (PUHZ-P&SUZ) | 35x1 | 50x1 | 60x1 | 71x1 | 100x1 | 125x1 | 140x1 | – | – | – | 50x2 | 60x2 | 71x2 | 100x2 | 125x2 | 50x3 | 60x3 | 71x3 | 50x4 | 60x4 |
| Distribution Pipe | – | – | – | – | – | – | – | – | – | – | MSDD-50TR2-E | | | MSDD-50WR2-E | | MSDT-111R3-E | | | MSDF-1111R2-E | |

# PCA-M KA SERIES

## POWER INVERTER

Demand Control (Optional, 60-140V/200/250) | Pure White | AUTO VANE | Fresh-air Intake | High-efficiency (Optional) | Long Life | Check! | SWING | High Ceiling | Low Ceiling | AUTO | ACO | Auto Restart | Low Temp Cooling | Silent | Ampere Limit | Rotation Back-up (Optional) | (Optional) | Group Control | M-NET connection (Optional) | Wi-Fi Interface (Optional) | COMPO | MXZ connection | Cleaning-free pipe reuse | Wiring Reuse (Optional) | Drain Lift Up (Optional) | Pump Down | Flare connection | Self Diagnosis | Failure Recall

| Type | | | | Inverter Heat Pump | | | | | | | | | |
|---|---|---|---|---|---|---|---|---|---|---|---|---|---|
| Indoor Unit | | | | PCA-M35KA | PCA-M50KA | PCA-M60KA | PCA-M71KA | PCA-M100KA | | PCA-M125KA | | PCA-M140KA | |
| Outdoor Unit | | | | PUZ-ZM35VKA | PUZ-ZM50VKA | PUZ-ZM60VHA | PUZ-ZM71VHA | PUZ-ZM100VKA | PUZ-ZM100YKA | PUZ-ZM125VKA | PUZ-ZM125YKA | PUZ-ZM140VKA | PUZ-ZM140YKA |
| Refrigerant | | | | R32*1 | | | | | | | | | |
| Power Supply | Source | | | Outdoor power supply | | | | | | | | | |
| | Outdoor (V/Phase/Hz) | | | VKA・VHA:230 / Single / 50, YKA:400 / Three / 50 | | | | | | | | | |
| Cooling | Capacity | Rated | kW | 3.6 | 5.0 | 6.1 | 7.1 | 9.5 | 9.5 | 12.5 | 12.5 | 13.4 | 13.4 |
| | | Min - Max | kW | 1.6 - 4.5 | 2.3 - 5.6 | 2.7 - 6.7 | 3.3 - 8.1 | 4.9 - 11.4 | 4.9 - 11.4 | 5.5 - 14.0 | 5.5 - 14.0 | 6.2 - 15.0 | 6.2 - 15.0 |
| | Total Input | Rated | kW | 0.829 | 1.250 | 1.521 | 1.829 | 2.317 | 2.317 | 3.846 | 3.846 | 3.941 | 3.941 |
| | EER | | | 4.34 | 4.00 | 4.01 | 3.88 | 4.10 | 4.10 | 3.25 | 3.25 | 3.40 | 3.40 |
| | | EEL Rank | | – | – | – | – | – | – | – | – | – | – |
| | Design Load | | kW | 3.6 | 5.0 | 6.1 | 7.1 | 9.5 | 9.5 | – | – | – | – |
| | Annual Electricity Consumption*2 | | kWh/a | 197 | 260 | 328 | 371 | 513 | 523 | – | – | – | – |
| | SEER | | | 6.4 | 6.7 | 6.5 | 6.7 | 6.4 | 6.3 | – | – | – | – |
| | | Energy Efficiency Class | | A++ | A++ | A++ | A++ | A++ | A++ | – | – | – | – |
| Heating (Average Season) | Capacity | Rated | kW | 4.1 | 5.5 | 7.0 | 8.0 | 11.2 | 11.2 | 14.0 | 14.0 | 16.0 | 16.0 |
| | | Min - Max | kW | 1.6-5.2 | 2.5 - 6.6 | 2.8 - 8.2 | 3.5 - 10.2 | 4.5 - 14.0 | 4.5 - 14.0 | 5.0 - 16.0 | 5.0 - 16.0 | 5.7 - 18.0 | 5.7 - 18.0 |
| | Total Input | Rated | kW | 1.019 | 1.361 | 1.745 | 2.156 | 3.018 | 3.018 | 3.954 | 3.954 | 4.432 | 4.432 |
| | COP | | | 4.02 | 4.04 | 4.01 | 3.71 | 3.71 | 3.71 | 3.54 | 3.54 | 3.61 | 3.61 |
| | | EEL Rank | | – | – | – | – | – | – | – | – | – | – |
| | Design Load | | kW | 2.4 | 3.8 | 4.4 | 4.7 | 7.8 | 7.8 | – | – | – | – |
| | Declared Capacity | at reference design temperature | kW | 2.4 (–10°C) | 3.8 (–10°C) | 4.4 (–10°C) | 4.7 (–10°C) | 7.8 (–10°C) | 7.8 (–10°C) | – | – | – | – |
| | | at bivalent temperature | kW | 2.4 (–10°C) | 3.8 (–10°C) | 4.4 (–10°C) | 4.7 (–10°C) | 7.8 (–10°C) | 7.8 (–10°C) | – | – | – | – |
| | | at operation limit temperature | kW | 2.2 (–11°C) | 3.7 (–11°C) | 2.8 (–20°C) | 3.5 (–20°C) | 5.8 (–20°C) | 5.8 (–20°C) | – | – | – | – |
| | Back Up Heating Capacity | | kW | 0 | 0 | 0 | 0 | 0 | 0 | – | – | – | – |
| | Annual Electricity Consumption*2 | | kWh/a | 839 | 1265 | 1499 | 1563 | 2539 | 2539 | – | – | – | – |
| | SCOP | | | 4.0 | 4.2 | 4.1 | 4.2 | 4.3 | 4.3 | – | – | – | – |
| | | Energy Efficiency Class | | A+ | A+ | A+ | A+ | A+ | A+ | – | – | – | – |
| Operating Current (max) | | | A | 13.3 | 13.4 | 19.4 | 19.4 | 27.2 | 8.7 | 27.3 | 10.3 | 28.9 | 13.9 |
| Indoor Unit | Input | Rated | kW | 0.04 | 0.05 | 0.06 | 0.06 | 0.09 | 0.09 | 0.11 | 0.11 | 0.14 | 0.14 |
| | Operating Current (max) | | A | 0.29 | 0.37 | 0.39 | 0.42 | 0.65 | 0.65 | 0.76 | 0.76 | 0.90 | 0.90 |
| | Dimensions <Panel> | H × W × D | mm | 230 - 960 - 680 | | 230 - 1280 - 680 | | 230 - 1600 - 680 | | | | | |
| | Weight <Panel> | | kg | 25 | 26 | 32 | 32 | 37 | 37 | 38 | 38 | 40 | 40 |
| | Air Volume [Lo-Mi2-Mi1-Hi] | | m³/min | 10-11-12-14 | 10-11-13-15 | 15-16-17-19 | 16-17-18-20 | 22-24-26-28 | 22-24-26-28 | 23-25-27-29 | 23-25-27-29 | 24-26-29-32 | 24-26-29-32 |
| | Sound Level (SPL) [Lo-Mi2-Mi1-Hi] | | dB(A) | 31-33-36-39 | 32-34-37-40 | 33-35-37-40 | 35-37-39-41 | 37-39-41-43 | 37-39-41-43 | 39-41-43-45 | 39-41-43-45 | 41-43-45-48 | 41-43-45-48 |
| | Sound Level (PWL) | | dB(A) | 60 | 60 | 60 | 62 | 63 | 63 | 65 | 65 | 68 | 68 |
| Outdoor Unit | Dimensions | H × W × D | mm | 630 - 809 - 300 | | 943 - 950 - 330 (+25) | | 1338 - 1050 - 330 (+40) | | | | | |
| | Weight | | kg | 46 | 46 | 70 | 70 | 116 | 123 | 116 | 125 | 118 | 131 |
| | Air Volume | Cooling | m³/min | 45 | 45 | 55 | 55 | 110 | 110 | 120 | 120 | 120 | 120 |
| | | Heating | m³/min | 45 | 45 | 55 | 55 | 110 | 110 | 120 | 120 | 120 | 120 |
| | Sound Level (SPL) | Cooling | dB(A) | 44 | 44 | 47 | 47 | 49 | 49 | 50 | 50 | 50 | 50 |
| | | Heating | dB(A) | 46 | 46 | 49 | 49 | 51 | 51 | 52 | 52 | 52 | 52 |
| | Sound Level (PWL) | Cooling | dB(A) | 65 | 65 | 67 | 67 | 69 | 69 | 70 | 70 | 70 | 70 |
| | Operating Current (max) | | A | 13.0 | 13.0 | 19.0 | 19.0 | 26.5 | 8.0 | 26.5 | 9.5 | 28.0 | 13.0 |
| | Breaker Size | | A | 16 | 16 | 25 | 25 | 32 | 16 | 32 | 16 | 40 | 16 |
| Ext. Piping | Diameter | Liquid / Gas | mm | 6.35 / 12.7 | 6.35 / 12.7 | 9.52 / 15.88 | 9.52 / 15.88 | 9.52 / 15.88 | 9.52 / 15.88 | 9.52 / 15.88 | 9.52 / 15.88 | 9.52 / 15.88 | 9.52 / 15.88 |
| | Max. Length | Out-In | m | 50 | 50 | 55 | 55 | 100 | 100 | 100 | 100 | 100 | 100 |
| | Max. Height | Out-In | m | 30 | 30 | 30 | 30 | 30 | 30 | 30 | 30 | 30 | 30 |
| Guaranteed Operating Range [Outdoor] | | Cooling*3 | °C | –15 ~ +46 | –15 ~ +46 | –15 ~ +46 | –15 ~ +46 | –15 ~ +46 | –15 ~ +46 | –15 ~ +46 | –15 ~ +46 | –15 ~ +46 | –15 ~ +46 |
| | | Heating | °C | –11 ~ +21 | –11 ~ +21 | –20 ~ +21 | –20 ~ +21 | –20 ~ +21 | –20 ~ +21 | –20 ~ +21 | –20 ~ +21 | –20 ~ +21 | –20 ~ +21 |

*1 Refrigerant leakage contributes to climate change. Refrigerant with lower global warming potential (GWP) would contribute less to global warming than a refrigerant with higher GWP, if leaked to the atmosphere. This appliance contains a refrigerant fluid with a GWP equal to 550. This means that if 1 kg of this refrigerant fluid would be leaked to the atmosphere, the impact on global warming would be 550 times higher than 1 kg of $CO_2$, over a period of 100 years. Never try to interfere with the refrigerant circuit yourself or disassemble the product yourself and always ask a professional. The GWP of R32 is 675 in the IPCC 4th Assessment Report.
*2 Energy consumption based on standard test results. Actual energy consumption will depend on how the appliance is used and where it is located.
*3 Optional air protection guide is required where ambient temperature is lower than –5°C.

# PCA-M KA SERIES

## STANDARD INVERTER

Demand Control (Optional, 60-140V/200/250) | Pure White | AUTO VANE | Fresh-air Intake | High-efficiency (Optional) | Long Life | Check! | SWING | High Ceiling | Low Ceiling | AUTO | ACO | Auto Restart | Low Temp Cooling | Silent | Ampere Limit | Rotation Back-up (Optional) | (Optional) | Group Control | M-NET connection (Optional) | Wi-Fi Interface (Optional) | COMPO | MXZ connection | Cleaning-free pipe reuse | Wiring Reuse (Optional) | Drain Lift Up (Optional) | Pump Down | Flare connection | Self Diagnosis | Failure Recall

| Type | | | | Inverter Heat Pump | | | | | | | | | |
|---|---|---|---|---|---|---|---|---|---|---|---|---|---|
| Indoor Unit | | | | PCA-M35KA | PCA-M50KA | PCA-M60KA | PCA-M71KA | PCA-M100KA | | PCA-M125KA | | PCA-M140KA | |
| Outdoor Unit | | | | SUZ-M35VA | SUZ-M50VA | SUZ-M60VA | SUZ-M71VA | PUZ-M100VKA | PUZ-M100YKA | PUZ-M125VKA | PUZ-M125YKA | PUZ-M140VKA | PUZ-M140YKA |
| Refrigerant | | | | R32*1 | | | | | | | | | |
| Power Supply | Source | | | Outdoor power supply | | | | | | | | | |
| | Outdoor (V/Phase/Hz) | | | VA・VKA:230 / Single / 50, YKA:400 / Three / 50 | | | | | | | | | |
| Cooling | Capacity | Rated | kW | 3.6 | 5.0 | 6.1 | 7.1 | 9.5 | 9.5 | 12.1 | 12.1 | 13.4 | 13.4 |
| | | Min - Max | kW | 0.8 - 3.9 | 1.5 - 5.6 | 1.6 - 6.3 | 2.2 - 8.1 | 4.0 - 10.6 | 4.0 - 10.6 | 5.7 - 13.0 | 5.7 - 13.0 | 5.7 - 14.1 | 5.7 - 14.1 |
| | Total Input | Rated | kW | 0.90 | 1.51 | 1.64 | 1.97 | 2.94 | 2.94 | 4.01 | 4.01 | 5.36 | 5.36 |
| | EER | | | 4.00 | 3.30 | 3.70 | 3.60 | 3.23 | 3.23 | 3.01 | 3.01 | 2.50 | 2.50 |
| | | EEL Rank | | – | – | – | – | – | – | – | – | – | – |
| | Design Load | | kW | 3.6 | 5.0 | 6.1 | 7.1 | 9.5 | 9.5 | 12.1 | 12.1 | 13.4 | 13.4 |
| | Annual Electricity Consumption*2 | | kWh/a | 198 | 291 | 333 | 381 | 552 | 552 | – | – | – | – |
| | SEER | | | 6.3 | 6.0 | 6.4 | 6.5 | 6.0 | 6.0 | – | – | – | – |
| | | Energy Efficiency Class | | A++ | A+ | A++ | A++ | A+ | A+ | – | – | – | – |
| Heating (Average Season) | Capacity | Rated | kW | 4.1 | 6.0 | 7.0 | 8.0 | 11.2 | 11.2 | 13.5 | 13.5 | 15.0 | 15.0 |
| | | Min - Max | kW | 1.0 - 5.0 | 1.5 - 7.2 | 1.6 - 8.0 | 2.0 - 10.2 | 2.8 - 12.5 | 2.8 - 12.5 | 4.1 - 15.0 | 4.1 - 15.0 | 4.2 - 15.8 | 4.2 - 15.8 |
| | Total Input | Rated | kW | 1.02 | 1.61 | 1.75 | 2.21 | 3.28 | 3.28 | 3.95 | 3.95 | 4.28 | 4.28 |
| | COP | | | 4.00 | 3.71 | 4.00 | 3.61 | 3.41 | 3.41 | 3.41 | 3.41 | 3.50 | 3.50 |
| | | EEL Rank | | – | – | – | – | – | – | – | – | – | – |
| | Design Load | | kW | 2.6 | 4.3 | 4.6 | 5.8 | 8.0 | 8.0 | 8.5 | 8.5 | 9.4 | 9.4 |
| | Declared Capacity | at reference design temperature | kW | 2.3 (–10°C) | 3.8 (–10°C) | 4.1 (–10°C) | 5.2 (–10°C) | 6.0 (–10°C) | 6.0 (–10°C) | 8.5 (–10°C) | 8.5 (–10°C) | 9.4 (–10°C) | 9.4 (–10°C) |
| | | at bivalent temperature | kW | 2.3 (–7°C) | 3.8 (–7°C) | 4.1 (–7°C) | 5.2 (–7°C) | 7.0 (–7°C) | 7.0 (–7°C) | 8.5 (–10°C) | 8.5 (–10°C) | 9.4 (–10°C) | 9.4 (–10°C) |
| | | at operation limit temperature | kW | 2.3 (–10°C) | 3.8 (–10°C) | 4.1 (–10°C) | 5.2 (–10°C) | 4.5 (–15°C) | 4.5 (–15°C) | 6.0 (–15°C) | 6.0 (–15°C) | 7.0 (–15°C) | 7.0 (–15°C) |
| | Back Up Heating Capacity | | kW | 0.3 | 0.5 | 0.5 | 0.6 | 2.0 | 2.0 | – | – | – | – |
| | Annual Electricity Consumption*2 | | kWh/a | 909 | 1456 | 1555 | 1971 | 2719 | 2719 | – | – | – | – |
| | SCOP | | | 4.0 | 4.1 | 4.1 | 4.1 | 4.1 | 4.1 | – | – | – | – |
| | | Energy Efficiency Class | | A+ | A+ | A+ | A+ | A+ | A+ | – | – | – | – |
| Operating Current (max) | | | A | 8.8 | 13.9 | 15.2 | 15.2 | 20.7 | 12.2 | 27.3 | 12.3 | 30.9 | 12.4 |
| Indoor Unit | Input | Rated | kW | 0.04 | 0.05 | 0.06 | 0.06 | 0.09 | 0.09 | 0.11 | 0.11 | 0.14 | 0.14 |
| | Operating Current (max) | | A | 0.29 | 0.37 | 0.39 | 0.42 | 0.65 | 0.65 | 0.76 | 0.76 | 0.90 | 0.90 |
| | Dimensions <Panel> | H × W × D | mm | 230 - 960 - 680 | | 230 - 1280 - 680 | | 230 - 1600 - 680 | | | | | |
| | Weight <Panel> | | kg | 25 | 26 | 32 | 32 | 37 | 37 | 38 | 38 | 40 | 40 |
| | Air Volume [Lo-Mi2-Mi1-Hi] | | m³/min | 10-11-12-14 | 10-11-13-15 | 15-16-17-19 | 16-17-18-20 | 22-24-26-28 | 22-24-26-28 | 23-25-27-29 | 23-25-27-29 | 24-26-29-32 | 24-26-29-32 |
| | Sound Level (SPL) [Lo-Mi2-Mi1-Hi] | | dB(A) | 31-33-36-39 | 32-34-37-40 | 33-35-37-40 | 35-37-39-41 | 37-39-41-43 | 37-39-41-43 | 39-41-43-45 | 39-41-43-45 | 41-43-45-48 | 41-43-45-48 |
| | Sound Level (PWL) | | dB(A) | 60 | 60 | 60 | 62 | 63 | 63 | 65 | 65 | 68 | 68 |
| Outdoor Unit | Dimensions | H × W × D | mm | 550 - 800 - 285 | 714 - 800 - 285 | 880 - 840 - 330 | | 981 - 1050 - 330 (+40) | | | | | |
| | Weight | | kg | 35 | 41 | 54 | 55 | 76 | 78 | 84 | 85 | 84 | 85 |
| | Air Volume | Cooling | m³/min | 34.3 | 45.8 | 50.1 | 50.1 | 79.0 | 79.0 | 86.0 | 86.0 | 86.0 | 86.0 |
| | | Heating | m³/min | 32.7 | 43.7 | 50.1 | 50.1 | 79.0 | 79.0 | 92.0 | 92.0 | 92.0 | 92.0 |
| | Sound Level (SPL) | Cooling | dB(A) | 48 | 48 | 49 | 49 | 51 | 51 | 54 | 54 | 55 | 55 |
| | | Heating | dB(A) | 48 | 49 | 51 | 51 | 54 | 54 | 56 | 56 | 57 | 57 |
| | Sound Level (PWL) | Cooling | dB(A) | 59 | 64 | 65 | 66 | 70 | 70 | 72 | 72 | 73 | 73 |
| | Operating Current (max) | | A | 8.5 | 13.5 | 14.8 | 14.8 | 20.0 | 11.5 | 26.5 | 11.5 | 30.0 | 11.5 |
| | Breaker Size | | A | 10 | 20 | 20 | 20 | 32 | 16 | 32 | 16 | 40 | 16 |
| Ext. Piping | Diameter | Liquid / Gas | mm | 6.35 / 9.52 | 6.35 / 12.7 | 6.35 / 15.88 | 9.52 / 15.88 | 9.52 / 15.88 | 9.52 / 15.88 | 9.52 / 15.88 | 9.52 / 15.88 | 9.52 / 15.88 | 9.52 / 15.88 |
| | Max. Length | Out-In | m | 20 | 30 | 30 | 30 | 50 | 55 | 65 | 65 | 65 | 65 |
| | Max. Height | Out-In | m | 12 | 30 | 30 | 30 | 30 | 30 | 30 | 30 | 30 | 30 |
| Guaranteed Operating Range [Outdoor] | | Cooling*3 | °C | –10 ~ +46 | –15 ~ +46 | –15 ~ +46 | –15 ~ +46 | –15 ~ +46 | –15 ~ +46 | –15 ~ +46 | –15 ~ +46 | –15 ~ +46 | –15 ~ +46 |
| | | Heating | °C | –10 ~ +24 | –10 ~ +24 | –10 ~ +24 | –10 ~ +24 | –15 ~ +21 | –15 ~ +21 | –15 ~ +21 | –15 ~ +21 | –15 ~ +21 | –15 ~ +21 |

*1 Refrigerant leakage contributes to climate change. Refrigerant with lower global warming potential (GWP) would contribute less to global warming than a refrigerant with higher GWP, if leaked to the atmosphere. This appliance contains a refrigerant fluid with a GWP equal to 550. This means that if 1 kg of this refrigerant fluid would be leaked to the atmosphere, the impact on global warming would be 550 times higher than 1 kg of $CO_2$, over a period of 100 years. Never try to interfere with the refrigerant circuit yourself or disassemble the product yourself and always ask a professional. The GWP of R32 is 675 in the IPCC 4th Assessment Report.
*2 Energy consumption based on standard test results. Actual energy consumption will depend on how the appliance is used and where it is located.
*3 Optional air protection guide is required where ambient temperature is lower than –5°C.

# SERIES SELECTION

## Power Inverter Series

DC Inverter | 35-71 Joint Lap | Vector Sine Wave | 100-250 DC Scroll | DC Fan Motor | Vector-Wave | 35-140 PAM | Power Receiver | Grooved Piping | 35-71 Heat Caulking Fixing Method

### Indoor Unit

R32
R410A

PCA-M35/50/60/71/100/125/140KA

### Outdoor Unit

R410A

For Single

PUHZ-ZRP35/50

PUHZ-ZRP60/71

PUHZ-ZRP100/125/140

R410A

For Multi
(Twin/Triple/Quadruple)

PUHZ-ZRP100/125/140/200/250

### Remote Controller

Optional

Optional

Optional

Optional

## Standard Inverter Series

DC Inverter | 50-71 Joint Lap | 100-250 Vector Sine Wave | 71-140 DC Rotary | 200/250 DC Scroll | DC Fan Motor | 100-250 Vector-Wave | 50-140 PAM | Grooved Piping | 50-71 Heat Caulking Fixing Method

### Indoor Unit

R32
R410A

PCA-M35/50/60/71/100/125/140KA

### Outdoor Unit

R410A

For Single

SUZ-KA35

SUZ-KA50/60/71

PUHZ-P100/125/140

R410A

For Multi
(Twin/Triple/Quadruple)

PUHZ-P100/125/140

PUHZ-P200/250

### Remote Controller

Optional

Optional

Optional

Optional

## PCA-M KA Indoor Unit Combinations

Indoor unit combinations shown below are possible.

| Indoor Unit Combination | | Outdoor Unit Capacity | | | | | | | | | | | | | | | | | | | |
|---|---|---|---|---|---|---|---|---|---|---|---|---|---|---|---|---|---|---|---|---|---|
| | | For Single | | | | | | | | | For Twin | | | | | | For Triple | | | For Quadruple | |
| | | 35 | 50 | 60 | 71 | 100 | 125 | 140 | 200 | 250 | 71 | 100 | 125 | 140 | 200 | 250 | 140 | 200 | 250 | 200 | 250 |
| Power Inverter (PUHZ-ZRP) | | 35x1 | 50x1 | 60x1 | 71x1 | 100x1 | 125x1 | 140x1 | – | – | 35x2 | 50x2 | 60x2 | 71x2 | 100x2 | 125x2 | 50x3 | 60x3 | 71x3 | 50x4 | 60x4 |
| | Distribution Pipe | – | – | – | – | – | – | – | – | – | – | MSDD-50TR-E | | | MSDD-50WR-E | | MSDT-111R-E | | | MSDF-1111R-E | |
| Standard Inverter (PUHZ-P&SUZ) | | 35x1 | 50x1 | 60x1 | 71x1 | 100x1 | 125x1 | 140x1 | – | – | – | 50x2 | 60x2 | 71x2 | 100x2 | 125x2 | 50x3 | 60x3 | 71x3 | 50x4 | 60x4 |
| | Distribution Pipe | – | – | – | – | – | – | – | – | – | – | MSDD-50TR-E | | | MSDD-50WR-E | | MSDT-111R-E | | | MSDF-1111R-E | |

# PCA-M KA SERIES

## POWER INVERTER

Demand Control (Optional) | Pure White | AUTO VANE | Fresh-air Intake | High-efficiency (Optional) | Long Life | Check! | SWING | High Ceiling | Low Ceiling | AUTO | ACO | Auto Restart | Low Temp Cooling | Silent
Ampere Limit (60-140V/200/250) | Rotation Back-up (Optional) | (Optional) | Group Control | M-NET connection (Optional) | Wi-Fi Interface (Optional) | COMPO | MXZ connection | Cleaning-free pipe reuse | Wiring Reuse (Optional) | Drain Lift Up (Optional) | Pump Down | Flare connection | Self Diagnosis | Failure Recall

| Type | | | | Inverter Heat Pump | | | | | | | | | |
|---|---|---|---|---|---|---|---|---|---|---|---|---|---|
| Indoor Unit | | | | PCA-M35KA | PCA-M50KA | PCA-M60KA | PCA-M71KA | PCA-M100KA | | PCA-M125KA | | PCA-M140KA | |
| Outdoor Unit | | | | PUHZ-ZRP35VKA2 | PUHZ-ZRP50VKA2 | PUHZ-ZRP60VHA2 | PUHZ-ZRP71VHA2 | PUHZ-ZRP100VKA3 | PUHZ-ZRP100YKA3 | PUHZ-ZRP125VKA3 | PUHZ-ZRP125YKA3 | PUHZ-ZRP140VKA3 | PUHZ-ZRP140YKA3 |
| Refrigerant | | | | R410A*1 | | | | | | | | | |
| Power Supply | Source | | | Outdoor power supply | | | | | | | | | |
| | Outdoor (V/Phase/Hz) | | | VKA・VHA:230 / Single / 50, YKA:400 / Three / 50 | | | | | | | | | |
| Cooling | Capacity | Rated | kW | 3.6 | 5.0 | 6.1 | 7.1 | 9.5 | 9.5 | 12.5 | 12.5 | 13.4 | 13.4 |
| | | Min - Max | kW | 1.6 - 4.5 | 2.3 - 5.6 | 2.7 - 6.7 | 3.3 - 8.1 | 4.9 - 11.4 | 4.9 - 11.4 | 5.5 - 14.0 | 5.5 - 14.0 | 6.2 - 15.0 | 6.2 - 15.0 |
| | Total Input | Rated | kW | 0.86 | 1.34 | 1.66 | 1.82 | 2.42 | 2.42 | 3.98 | 3.98 | 3.95 | 3.95 |
| | EER | | | 4.19 | 3.73 | 3.67 | 3.90 | 3.93 | 3.93 | 3.14 | 3.14 | 3.39 | 3.39 |
| | | EEL Rank | | – | – | – | – | – | – | – | – | – | – |
| | Design Load | | kW | 3.6 | 5.0 | 6.1 | 7.1 | 9.5 | 9.5 | – | – | – | – |
| | Annual Electricity Consumption*2 | | kWh/a | 202 | 283 | 340 | 367 | 542 | 553 | – | – | – | – |
| | SEER | | | 6.2 | 6.1 | 6.2 | 6.7 | 6.1 | 6.0 | – | – | – | – |
| | | Energy Efficiency Class | | A++ | A++ | A++ | A++ | A++ | A+ | – | – | – | – |
| Heating (Average Season) | Capacity | Rated | kW | 4.1 | 5.5 | 7.0 | 8.0 | 11.2 | 11.2 | 14.0 | 14.0 | 16.0 | 16.0 |
| | | Min - Max | kW | 1.6 - 5.2 | 2.5 - 6.6 | 2.8 - 8.2 | 3.5 - 10.2 | 4.5 - 14.0 | 4.5 - 14.0 | 5.0 - 16.0 | 5.0 - 16.0 | 5.7 - 18.0 | 5.7 - 18.0 |
| | Total Input | Rated | kW | 1.02 | 1.45 | 1.93 | 2.20 | 3.04 | 3.04 | 3.80 | 3.80 | 4.57 | 4.57 |
| | COP | | | 4.02 | 3.79 | 3.63 | 3.64 | 3.68 | 3.68 | 3.68 | 3.68 | 3.50 | 3.50 |
| | | EEL Rank | | – | – | – | – | – | – | – | – | – | – |
| | Design Load | | kW | 2.4 | 3.8 | 4.4 | 4.7 | 7.8 | 7.8 | – | – | – | – |
| | Declared Capacity | at reference design temperature | kW | 2.4 (–10°C) | 3.8 (–10°C) | 4.4 (–10°C) | 4.7 (–10°C) | 7.8 (–10°C) | 7.8 (–10°C) | – | – | – | – |
| | | at bivalent temperature | kW | 2.4 (–10°C) | 3.8 (–10°C) | 4.4 (–10°C) | 4.7 (–10°C) | 7.8 (–10°C) | 7.8 (–10°C) | – | – | – | – |
| | | at operation limit temperature | kW | 2.2 (–11°C) | 3.7 (–11°C) | 2.8 (–20°C) | 3.5 (–20°C) | 5.8 (–20°C) | 5.8 (–20°C) | – | – | – | – |
| | Back Up Heating Capacity | | kW | 0 | 0 | 0 | 0 | 0 | 0 | – | – | – | – |
| | Annual Electricity Consumption*2 | | kWh/a | 815 | 1257 | 1458 | 1519 | 2837 | 2837 | – | – | – | – |
| | SCOP | | | 4.1 | 4.2 | 4.3 | 4.3 | 3.9 | 3.9 | – | – | – | – |
| | | Energy Efficiency Class | | A+ | A+ | A+ | A+ | A | A | – | – | – | – |
| Operating Current (max) | | | A | 13.3 | 13.4 | 19.4 | 19.4 | 27.2 | 8.7 | 27.3 | 10.3 | 28.9 | 13.9 |
| Indoor Unit | Input | Rated | kW | 0.04 | 0.05 | 0.06 | 0.06 | 0.09 | 0.09 | 0.11 | 0.11 | 0.14 | 0.14 |
| | Operating Current (max) | | A | 0.29 | 0.37 | 0.39 | 0.42 | 0.65 | 0.65 | 0.76 | 0.76 | 0.90 | 0.90 |
| | Dimensions <Panel> | H × W × D | mm | 230 - 960 - 680 | | 230 - 1280 - 680 | | 230 - 1600 - 680 | | | | | |
| | Weight <Panel> | | kg | 25 | 26 | 32 | 32 | 37 | 37 | 38 | 38 | 40 | 40 |
| | Air Volume [Lo-Mi2-Mi1-Hi] | | m³/min | 10-11-12-14 | 10-11-13-15 | 15-16-17-19 | 16-17-18-20 | 22-24-26-28 | 22-24-26-28 | 23-25-27-29 | 23-25-27-29 | 24-26-29-32 | 24-26-29-32 |
| | Sound Level (SPL) [Lo-Mi2-Mi1-Hi] | | dB(A) | 31-33-36-39 | 32-34-37-40 | 33-35-37-40 | 35-37-39-41 | 37-39-41-43 | 37-39-41-43 | 39-41-43-45 | 39-41-43-45 | 41-43-45-48 | 41-43-45-48 |
| | Sound Level (PWL) | | dB(A) | 60 | 60 | 60 | 62 | 63 | 63 | 65 | 65 | 68 | 68 |
| Outdoor Unit | Dimensions | H × W × D | mm | 630 - 809 - 300 | | 943 - 950 - 330 (+30) | | 1338 - 1050 - 330 (+40) | | | | | |
| | Weight | | kg | 43 | 46 | 70 | 70 | 116 | 123 | 116 | 125 | 118 | 131 |
| | Air Volume | Cooling | m³/min | 45 | 45 | 55 | 55 | 110 | 110 | 120 | 120 | 120 | 120 |
| | | Heating | m³/min | 45 | 45 | 55 | 55 | 110 | 110 | 120 | 120 | 120 | 120 |
| | Sound Level (SPL) | Cooling | dB(A) | 44 | 44 | 47 | 47 | 49 | 49 | 50 | 50 | 50 | 50 |
| | | Heating | dB(A) | 46 | 46 | 48 | 48 | 51 | 51 | 52 | 52 | 52 | 52 |
| | Sound Level (PWL) | Cooling | dB(A) | 65 | 65 | 67 | 67 | 69 | 69 | 70 | 70 | 70 | 70 |
| | Operating Current (max) | | A | 13.0 | 13.0 | 19.0 | 19.0 | 26.5 | 8.0 | 26.5 | 9.5 | 28.0 | 13.0 |
| | Breaker Size | | A | 16 | 16 | 25 | 25 | 32 | 16 | 32 | 16 | 40 | 16 |
| Ext. Piping | Diameter | Liquid / Gas | mm | 6.35 / 12.7 | 6.35 / 12.7 | 9.52 / 15.88 | 9.52 / 15.88 | 9.52 / 15.88 | 9.52 / 15.88 | 9.52 / 15.88 | 9.52 / 15.88 | 9.52 / 15.88 | 9.52 / 15.88 |
| | Max. Length | Out-In | m | 50 | 50 | 50 | 50 | 75 | 75 | 75 | 75 | 75 | 75 |
| | Max. Height | Out-In | m | 30 | 30 | 30 | 30 | 30 | 30 | 30 | 30 | 30 | 30 |
| Guaranteed Operating Range [Outdoor] | | Cooling*3 | °C | –15 ~ +46 | –15 ~ +46 | –15 ~ +46 | –15 ~ +46 | –15 ~ +46 | –15 ~ +46 | –15 ~ +46 | –15 ~ +46 | –15 ~ +46 | –15 ~ +46 |
| | | Heating | °C | –11 ~ +21 | –11 ~ +21 | –20 ~ +21 | –20 ~ +21 | –20 ~ +21 | –20 ~ +21 | –20 ~ +21 | –20 ~ +21 | –20 ~ +21 | –20 ~ +21 |

*1 Refrigerant leakage contributes to climate change. Refrigerant with lower global warming potential (GWP) would contribute less to global warming than a refrigerant with higher GWP, if leaked to the atmosphere. This appliance contains a refrigerant fluid with a GWP equal to 1975. This means that if 1 kg of this refrigerant fluid would be leaked to the atmosphere, the impact on global warming would be 1975 times higher than 1 kg of $CO_2$, over a period of 100 years. Never try to interfere with the refrigerant circuit yourself or disassemble the product yourself and always ask a professional.
The GWP of R410A is 2088 in the IPCC 4th Assessment Report.
*2 Energy consumption based on standard test results. Actual energy consumption will depend on how the appliance is used and where it is located.
*3 Optional air protection guide is required where ambient temperature is lower than –5°C.

# PCA-M KA SERIES

## STANDARD INVERTER

Demand Control (PUHZ, Optional) | Pure White | AUTO VANE | Fresh-air Intake | High-efficiency (Optional) | Long Life | Check! | SWING | High Ceiling | Low Ceiling | AUTO | ACO | Auto Restart | Low Temp Cooling | Silent (PUHZ)
Rotation Back-up (PUHZ, Optional) | (Optional) | Group Control (PUHZ) | Group Control (SUZ, Optional) | M-NET connection (Optional) | Wi-Fi Interface (Optional) | COMPO (PUHZ) | MXZ connection | Cleaning-free pipe reuse | Wiring Reuse (PUHZ, Optional) | Drain Lift Up (Optional) | Pump Down (PUHZ) | Flare connection | Self Diagnosis | Failure Recall

| Type | | | | Inverter Heat Pump | | | | | | | | | |
|---|---|---|---|---|---|---|---|---|---|---|---|---|---|
| Indoor Unit | | | | PCA-M35KA | PCA-M50KA | PCA-M60KA | PCA-M71KA | PCA-M100KA | | PCA-M125KA | | PCA-M140KA | |
| Outdoor Unit | | | | SUZ-KA35VA6 | SUZ-KA50VA6 | SUZ-KA60VA6 | SUZ-KA71VA6 | PUHZ-P100VKA | PUHZ-P100YKA | PUHZ-P125VKA | PUHZ-P125YKA | PUHZ-P140VKA | PUHZ-P140YKA |
| Refrigerant | | | | R410A*1 | | | | | | | | | |
| Power Supply | Source | | | Outdoor power supply | | | | | | | | | |
| | Outdoor (V/Phase/Hz) | | | VA・VKA:230 / Single / 50, YKA:400 / Three / 50 | | | | | | | | | |
| Cooling | Capacity | Rated | kW | 3.6 | 5.0 | 5.7 | 7.1 | 9.4 | 9.4 | 12.1 | 12.1 | 13.6 | 13.6 |
| | | Min - Max | kW | 1.4 - 3.9 | 2.3 - 5.6 | 2.3 - 6.3 | 2.8 - 8.1 | 3.7 - 10.6 | 3.7 - 10.6 | 5.6 - 13.0 | 5.6 - 13.0 | 5.8 - 14.1 | 5.8 - 14.1 |
| | Total Input | Rated | kW | 1.050 | 1.550 | 1.720 | 2.060 | 3.05 | 3.05 | 4.24 | 4.24 | 5.62 | 5.62 |
| | EER | | | 3.43 | 3.23 | 3.31 | 3.45 | 3.08 | 3.08 | 2.85 | 2.85 | 2.41 | 2.41 |
| | | EEL Rank | | – | – | – | – | – | – | – | – | – | – |
| | Design Load | | kW | 3.6 | 5.0 | 5.7 | 7.1 | 9.4 | 9.4 | – | – | – | – |
| | Annual Electricity Consumption*2 | | kWh/a | 209 | 296 | 325 | 409 | 586 | 586 | – | – | – | – |
| | SEER | | | 6.0 | 5.8 | 6.1 | 6.0 | 5.6 | 5.6 | – | – | – | – |
| | | Energy Efficiency Class | | A+ | A+ | A++ | A+ | A+ | A+ | – | – | – | – |
| Heating (Average Season) | Capacity | Rated | kW | 4.1 | 5.5 | 6.9 | 7.9 | 11.2 | 11.2 | 13.5 | 13.5 | 15.0 | 15.0 |
| | | Min - Max | kW | 1.7 - 5.0 | 1.7 - 6.6 | 2.5 - 8.0 | 2.6 - 10.2 | 2.8 - 12.5 | 2.8 - 12.5 | 4.8 - 15.0 | 4.8 - 15.0 | 4.9 - 15.8 | 4.9 - 15.8 |
| | Total Input | Rated | kW | 1.050 | 1.520 | 1.910 | 2.180 | 3.37 | 3.37 | 4.06 | 4.06 | 4.47 | 4.47 |
| | COP | | | 3.90 | 3.62 | 3.61 | 3.62 | 3.32 | 3.32 | 3.32 | 3.32 | 3.35 | 3.35 |
| | | EEL Rank | | – | – | – | – | – | – | – | – | – | – |
| | Design Load | | kW | 2.6 | 4.0 | 4.8 | 5.8 | 8.0 | 8.0 | – | – | – | – |
| | Declared Capacity | at reference design temperature | kW | 2.3 (–10°C) | 3.6 (–10°C) | 4.0 (–10°C) | 5.2 (–10°C) | 6.0 (–10°C) | 6.0 (–10°C) | – | – | – | – |
| | | at bivalent temperature | kW | 2.3 (–7°C) | 3.6 (–7°C) | 4.3 (–7°C) | 5.2 (–7°C) | 7.0 (–7°C) | 7.0 (–7°C) | – | – | – | – |
| | | at operation limit temperature | kW | 2.3 (–10°C) | 3.6 (–10°C) | 4.0 (–10°C) | 5.2 (–10°C) | 4.5 (–15°C) | 4.5 (–15°C) | – | – | – | – |
| | Back Up Heating Capacity | | kW | 0.3 | 0.4 | 0.8 | 0.6 | 2.0 | 2.0 | – | – | – | – |
| | Annual Electricity Consumption*2 | | kWh/a | 887 | 1398 | 1678 | 2028 | 2726 | 2726 | – | – | – | – |
| | SCOP | | | 4.1 | 4.0 | 4.0 | 4.3 | 4.1 | 4.1 | – | – | – | – |
| | | Energy Efficiency Class | | A+ | A+ | A+ | A+ | A+ | A+ | – | – | – | – |
| Operating Current (max) | | | A | 8.5 | 12.4 | 14.4 | 16.5 | 20.7 | 12.2 | 27.3 | 12.3 | 30.9 | 12.4 |
| Indoor Unit | Input | Rated | kW | 0.04 | 0.05 | 0.06 | 0.06 | 0.09 | 0.09 | 0.11 | 0.11 | 0.14 | 0.14 |
| | Operating Current (max) | | A | 0.29 | 0.37 | 0.39 | 0.42 | 0.65 | 0.65 | 0.76 | 0.76 | 0.90 | 0.90 |
| | Dimensions <Panel> | H × W × D | mm | 230-960-680 | | 230-1280-680 | | 230-1600-680 | | | | | |
| | Weight <Panel> | | kg | 25 | 26 | 32 | 32 | 37 | 37 | 38 | 38 | 40 | 40 |
| | Air Volume [Lo-Mi2-Mi1-Hi] | | m³/min | 10-11-12-14 | 10-11-13-15 | 15-16-17-19 | 16-17-18-20 | 22-24-26-28 | 22-24-26-28 | 23-25-27-29 | 23-25-27-29 | 24-26-29-32 | 24-26-29-32 |
| | Sound Level (SPL) [Lo-Mi2-Mi1-Hi] | | dB(A) | 31-33-36-39 | 32-34-37-40 | 33-35-37-40 | 35-37-39-41 | 37-39-41-43 | 37-39-41-43 | 39-41-43-45 | 39-41-43-45 | 41-43-45-48 | 41-43-45-48 |
| | Sound Level (PWL) | | dB(A) | 60 | 60 | 60 | 62 | 63 | 63 | 65 | 65 | 68 | 68 |
| Outdoor Unit | Dimensions | H × W × D | mm | 550 - 800 - 285 | | 880 - 840 - 330 | | 981 - 1050 - 330 | | | | | |
| | Weight | | kg | 35 | 54 | 50 | 53 | 76 | 78 | 84 | 85 | 84 | 85 |
| | Air Volume | Cooling | m³/min | 36.3 | 44.6 | 40.9 | 50.1 | 79 | 79 | 86 | 86 | 86 | 86 |
| | | Heating | m³/min | 34.8 | 44.6 | 49.2 | 48.2 | 79 | 79 | 92 | 92 | 92 | 92 |
| | Sound Level (SPL) | Cooling | dB(A) | 49 | 52 | 55 | 55 | 51 | 51 | 54 | 54 | 56 | 56 |
| | | Heating | dB(A) | 50 | 52 | 55 | 55 | 54 | 54 | 56 | 56 | 57 | 57 |
| | Sound Level (PWL) | Cooling | dB(A) | 62 | 65 | 65 | 69 | 70 | 70 | 72 | 72 | 75 | 75 |
| | Operating Current (max) | | A | 8.2 | 12.0 | 14.0 | 16.1 | 20.0 | 11.5 | 26.5 | 11.5 | 30.0 | 11.5 |
| | Breaker Size | | A | 10 | 20 | 20 | 20 | 32 | 16 | 32 | 16 | 40 | 16 |
| Ext. Piping | Diameter | Liquid / Gas | mm | 6.35 / 9.52 | 6.35 / 12.7 | 6.35 / 15.88 | 9.52 / 15.88 | 9.52 / 15.88 | 9.52 / 15.88 | 9.52 / 15.88 | 9.52 / 15.88 | 9.52 / 15.88 | 9.52 / 15.88 |
| | Max. Length | Out-In | m | 20 | 30 | 30 | 30 | 50 | 50 | 50 | 50 | 50 | 50 |
| | Max. Height | Out-In | m | 12 | 30 | 30 | 30 | 30 | 30 | 30 | 30 | 30 | 30 |
| Guaranteed Operating Range [Outdoor] | | Cooling*3 | °C | –10 ~ +46 | –15 ~ +46 | –15 ~ +46 | –15 ~ +46 | –15 ~ +46 | –15 ~ +46 | –15 ~ +46 | –15 ~ +46 | –15 ~ +46 | –15 ~ +46 |
| | | Heating | °C | –10 ~ +24 | –10 ~ +24 | –10 ~ +24 | –10 ~ +24 | –15 ~ +21 | –15 ~ +21 | –15 ~ +21 | –15 ~ +21 | –15 ~ +21 | –15 ~ +21 |

*1 Refrigerant leakage contributes to climate change. Refrigerant with lower global warming potential (GWP) would contribute less to global warming than a refrigerant with higher GWP, if leaked to the atmosphere. This appliance contains a refrigerant fluid with a GWP equal to 1975. This means that if 1 kg of this refrigerant fluid would be leaked to the atmosphere, the impact on global warming would be 1975 times higher than 1 kg of $CO_2$, over a period of 100 years. Never try to interfere with the refrigerant circuit yourself or disassemble the product yourself and always ask a professional.
The GWP of R410A is 2088 in the IPCC 4th Assessment Report.
*2 Energy consumption based on standard test results. Actual energy consumption will depend on how the appliance is used and where it is located.
*3 Optional air protection guide is required where ambient temperature is lower than –5°C.

# PCA–HA SERIES

R32
R410A

PCA-M71HA

Standard features include a strong carbon-black stainless steel body and built-in oil mist filter to prevent oil from getting into the unit providing a comfortable air conditioning environment in kitchens that use open-flame cooking.

## Tough on Oily Smoke

A durable stainless steel casing that is resistant to oil and grease is provided to protect the surface of the body. Grimy dirt and stains are removed easily, enabling the unit to be kept clean at all times.

## High-performance Oil Mist Filter

A high-performance heavy-duty oil mist filter is included as standard equipment. The filtering system is more efficient than conventional filters, thereby effectively reducing the oily smoke entering the air conditioner. The filter is disposable, thereby enabling trouble-free cleaning and maintenance.

### Oil Mist Filter Cleaning

When used in kitchens, the oil mist filter should be replaced once every two months. The system comes with 12 filters elements. After these have been used, optional elements (PAC-SG38KF-E) can be purchased.

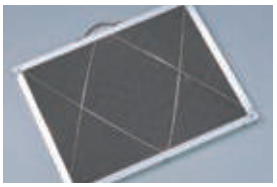

Oil mist filter

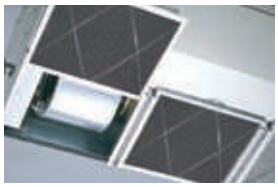

Pull the handle to easily slide the filter out

## Easy Maintenance – Even for Cleaning the Fan

A separate fan casing that can be disassembled in sections is adopted to ensure easy fan cleaning. Drain pan cleaning onsite is also no problem owing to the use of a pipe connector that is easily removed.

## Fresh Outside-air Intake (Option)

There is a knock-out opening on the rear panel of the unit that can be used to bring fresh air into the unit. This helps to improve ventilation and make the kitchen comfortable.

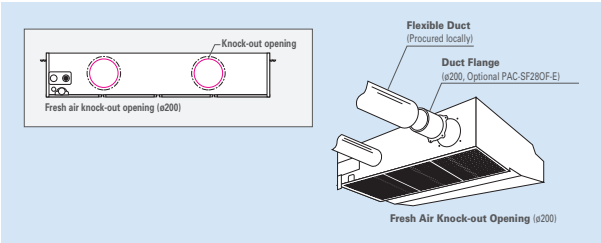


Notes: 1) A fresh-air duct flange is required (sold separately)
2) Intake air is not 100% fresh (outside) air.

## Cosmetic Front and Hanging Fixture Covers (Option)

Cosmetic covers are available to prevent the collection of dust and grime on the main body and hanging fixture sections.

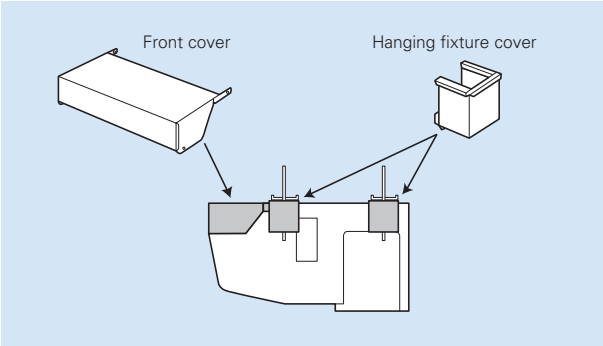

# SERIES SELECTION

## Power Inverter Series

DC Inverter | 71 Joint Lap | Vector Sine Wave | 100-250 DC Scroll | DC Fan Motor | Vector-Wave | 71 PAM | Power Receiver | Grooved Piping | 71 Heat Caulking Fixing Method

### Indoor Unit

R32

R410A

PCA-M71HA

### Outdoor Unit

R32

For Single

PUZ-ZM71

R32

For Multi
(Twin/Triple)

PUZ-ZM140/250

### Remote Controller

Optional

Optional

Optional

## PCA-M HA Indoor Unit Combinations

Indoor unit combinations shown below are possible.

| Indoor Unit Combination | Outdoor Unit Capacity | | | | | | | | | | | | | | | | | | | |
|---|---|---|---|---|---|---|---|---|---|---|---|---|---|---|---|---|---|---|---|---|
| | For Single | | | | | | | | | For Twin | | | | | | For Triple | | | For Quadruple | |
| | 35 | 50 | 60 | 71 | 100 | 125 | 140 | 200 | 250 | 71 | 100 | 125 | 140 | 200 | 250 | 140 | 200 | 250 | 200 | 250 |
| Power Inverter (PUZ-ZM) | – | – | – | 71x1 | – | – | – | – | – | – | – | – | 71x2 | – | – | – | – | 71x3 | – | – |
| Distribution Pipe | – | – | – | – | – | – | – | – | – | – | – | – | MSDD-50TR2-E | – | – | – | – | MSDT-111R3-E | – | – |

# SERIES SELECTION

## Power Inverter Series

DC Inverter | 71 Joint Lap | Vector Sine Wave | 100-250 DC Scroll | DC Fan Motor | Vector-Wave | 71 PAM | Power Receiver | Grooved Piping | 71 Heat Caulking Fixing Method

### Indoor Unit

R32

R410A

PCA-M71HA

### Outdoor Unit

R410A

For Single

PUHZ-ZRP71

R410A

For Multi
(Twin/Triple)

PUHZ-ZRP140/250

### Remote Controller

Optional

Optional

Optional

## PCA-M HA Indoor Unit Combinations

Indoor unit combinations shown below are possible.

| Indoor Unit Combination | Outdoor Unit Capacity | | | | | | | | | | | | | | | | | | | |
|---|---|---|---|---|---|---|---|---|---|---|---|---|---|---|---|---|---|---|---|---|
| | For Single | | | | | | | | | For Twin | | | | | | For Triple | | | For Quadruple | |
| | 35 | 50 | 60 | 71 | 100 | 125 | 140 | 200 | 250 | 71 | 100 | 125 | 140 | 200 | 250 | 140 | 200 | 250 | 200 | 250 |
| Power Inverter (PUHZ-ZRP) | – | – | – | 71x1 | – | – | – | – | – | – | – | – | 71x2 | – | – | – | – | 71x3 | – | – |
| Distribution Pipe | – | – | – | – | – | – | – | – | – | – | – | – | MSDD-50TR-E | – | – | – | – | MSDT-111R-E | – | – |

# PCA-RP HA SERIES

POWER INVERTER

Demand Control (Optional) | Fresh-air Intake | Oil Mist Filter | Check! | ACO | Auto Restart | Low Temp Cooling | Silent | Ampere Limit | Rotation Back-up (Optional) | (Optional) | Group Control | M-NET connection (Optional) | COMPO | Cleaning-free pipe reuse | Wiring Reuse (Optional) | Pump Down | Flare connection | Self Diagnosis | Failure Recall

| Type | | | | Inverter Heat Pump | |
|---|---|---|---|---|---|
| Indoor Unit | | | | PCA-M71HA | |
| Outdoor Unit | | | | PUHZ-ZRP71VHA2 | PUZ-ZM71VHA |
| Refrigerant | | | | R410A DX*1 | R32 DX*1 |
| Power Supply | Source | | | Outdoor power supply | |
| | Outdoor (V/Phase/Hz) | | | 230 / Single / 50 | |
| Cooling | Capacity | Rated | kW | 7.1 | 7.1 |
| | | Min - Max | kW | 3.3 - 8.1 | 3.3 - 8.1 |
| | Total Input | Rated | kW | 2.17 | 2.02 |
| | EER | | | – | – |
| | | EEL Rank | | – | – |
| | Design Load | | kW | 7.1 | 7.1 |
| | Annual Electricity Consumption*2 | | kWh/a | 447 | 444 |
| | SEER | | | 5.6 | 5.6 |
| | | Energy Efficiency Class | | A+ | A+ |
| Heating (Average Season) | Capacity | Rated | kW | 7.6 | 7.6 |
| | | Min - Max | kW | 3.5 - 10.2 | 3.5 - 10.2 |
| | Total Input | Rated | kW | 2.35 | 2.17 |
| | COP | | | – | – |
| | | EEL Rank | | – | – |
| | Design Load | | kW | 4.7 | 4.7 |
| | Declared Capacity | at reference design temperature | kW | 4.7 | 4.7 |
| | | at bivalent temperature | kW | 4.7 | 4.7 |
| | | at operation limit temperature | kW | 3.5 | 3.7 |
| | Back Up Heating Capacity | | kW | 0.0 | 0.0 |
| | Annual Electricity Consumption*2 | | kWh/a | 1751 | 1673 |
| | SCOP | | | 3.8 | 3.9 |
| | | Energy Efficiency Class | | A | A |
| Operating Current (max) | | | A | 19.4 | |
| Indoor Unit | Input | Rated | kW | 0.10 | |
| | Operating Current (max) | | A | 0.43 | |
| | Dimensions <Panel> | H × W × D | mm | 280 - 1136 - 650 | |
| | Weight <Panel> | | kg | 42 | |
| | Air Volume [Lo-Hi] | | m³/min | 16 - 18 | |
| | Sound Level (SPL) [Lo-Hi] | | dB(A) | 37 - 39 | |
| | Sound Level (PWL) | | dB(A) | 57 | |
| Outdoor Unit | Dimensions | H × W × D | mm | 943 - 950 - 330 (+30) | 943 - 950 - 330 (+25) |
| | Weight | | kg | 70 | 70 |
| | Air Volume | Cooling | m³/min | 55.0 | 55.0 |
| | | Heating | m³/min | 55.0 | 55.0 |
| | Sound Level (SPL) | Cooling | dB(A) | 47 | 47 |
| | | Heating | dB(A) | 48 | 49 |
| | Sound Level (PWL) | Cooling | dB(A) | 67 | 67 |
| | Operating Current (max) | | A | 19.0 | 19.0 |
| | Breaker Size | | A | 25 | 25 |
| Ext. Piping | Diameter | Liquid / Gas | mm | 9.52 / 15.88 | 9.52 / 15.88 |
| | Max. Length | Out-In | m | 50 | 55 |
| | Max. Height | Out-In | m | 30 | 30 |
| Guaranteed Operating Range [Outdoor] | | Cooling*3 | °C | –15 ~ +46 | –15 ~ +46 |
| | | Heating | °C | –20 ~ +21 | –20 ~ +21 |

*1 Refrigerant leakage contributes to climate change. Refrigerant with lower global warming potential (GWP) would contribute less to global warming than a refrigerant with higher GWP, if leaked to the atmosphere. This appliance contains a refrigerant fluid with a GWP equal to 1975. This means that if 1 kg of this refrigerant fluid would be leaked to the atmosphere, the impact on global warming would be 1975 times higher than 1 kg of $CO_2$, over a period of 100 years. Never try to interfere with the refrigerant circuit yourself or disassemble the product yourself and always ask a professional.
The GWP of R410A is 2088 in the IPCC 4th Assessment Report.
*2 Energy consumption based on standard test results. Actual energy consumption will depend on how the appliance is used and where it is located.
*3 Optional air protection guide is required where ambient temperature is lower than –5°C.

# PCA-RP HA SERIES

POWER INVERTER

Demand Control (Optional) | Fresh-air Intake | Oil Mist Filter | Check! | ACO | Auto Restart | Low Temp Cooling | Silent | Ampere Limit | Rotation Back-up (Optional) | (Optional) | Group Control | M-NET connection (Optional) | COMPO | Cleaning-free pipe reuse | Wiring Reuse (Optional) | Pump Down | Flare connection | Self Diagnosis | Failure Recall

| Type | | | | Inverter Heat Pump |
|---|---|---|---|---|
| Indoor Unit | | | | PCA-M71HA |
| Outdoor Unit | | | | PUHZ-ZRP71VHA2 |
| Refrigerant | | | | R410A*1 |
| Power Supply | Source | | | Outdoor power supply |
| | Outdoor (V/Phase/Hz) | | | 230 / Single / 50 |
| Cooling | Capacity | Rated | kW | 7.1 |
| | | Min - Max | kW | 3.3 - 8.1 |
| | Total Input | Rated | kW | 2.17 |
| | EER | | | – |
| | | EEL Rank | | – |
| | Design Load | | kW | 7.1 |
| | Annual Electricity Consumption*2 | | kWh/a | 447 |
| | SEER | | | 5.6 |
| | | Energy Efficiency Class | | A+ |
| Heating (Average Season) | Capacity | Rated | kW | 7.6 |
| | | Min - Max | kW | 3.5 - 10.2 |
| | Total Input | Rated | kW | 2.35 |
| | COP | | | – |
| | | EEL Rank | | – |
| | Design Load | | kW | 4.7 |
| | Declared Capacity | at reference design temperature | kW | 4.7 (–10°C) |
| | | at bivalent temperature | kW | 4.7 (–10°C) |
| | | at operation limit temperature | kW | 3.5 (–20°C) |
| | Back Up Heating Capacity | | kW | 0 |
| | Annual Electricity Consumption*2 | | kWh/a | 1751 |
| | SCOP | | | 3.8 |
| | | Energy Efficiency Class | | A |
| Operating Current (max) | | | A | 19.4 |
| Indoor Unit | Input | Rated | kW | 0.09 |
| | Operating Current (max) | | A | 0.43 |
| | Dimensions <Panel> | H × W × D | mm | 280 - 1136 - 650 |
| | Weight <Panel> | | kg | 41 |
| | Air Volume [Lo-Hi] | | m³/min | 17 - 19 |
| | Sound Level (SPL) [Lo-Hi] | | dB(A) | 34 - 38 |
| | Sound Level (PWL) | | dB(A) | 56 |
| Outdoor Unit | Dimensions | H × W × D | mm | 943 - 950 - 330 (+30) |
| | Weight | | kg | 70 |
| | Air Volume | Cooling | m³/min | 55.0 |
| | | Heating | m³/min | 55.0 |
| | Sound Level (SPL) | Cooling | dB(A) | 47 |
| | | Heating | dB(A) | 48 |
| | Sound Level (PWL) | Cooling | dB(A) | 67 |
| | Operating Current (max) | | A | 19.0 |
| | Breaker Size | | A | 25 |
| Ext. Piping | Diameter | Liquid / Gas | mm | 9.52 / 15.88 |
| | Max. Length | Out-In | m | 50 |
| | Max. Height | Out-In | m | 30 |
| Guaranteed Operating Range [Outdoor] | | Cooling*3 | °C | –15 ~ +46 |
| | | Heating | °C | –20 ~ +21 |

*1 Refrigerant leakage contributes to climate change. Refrigerant with lower global warming potential (GWP) would contribute less to global warming than a refrigerant with higher GWP, if leaked to the atmosphere. This appliance contains a refrigerant fluid with a GWP equal to 1975. This means that if 1 kg of this refrigerant fluid would be leaked to the atmosphere, the impact on global warming would be 1975 times higher than 1 kg of $CO_2$, over a period of 100 years. Never try to interfere with the refrigerant circuit yourself or disassemble the product yourself and always ask a professional.
The GWP of R410A is 2088 in the IPCC 4th Assessment Report.
*2 Energy consumption based on standard test results. Actual energy consumption will depend on how the appliance is used and where it is located.
*3 Optional air protection guide is required where ambient temperature is lower than –5°C.

# PSA SERIES R410A

Installation of this floor-standing series is easy and quick.
An excellent choice when there is a sudden need for an air conditioner to be installed.

## Quick and Easy Installation, Space-saving and Design That Compliments Any Interior

The floor-standing indoor unit is mounted on the floor, enabling quick installation. Its compact body requires only minimal space.

● PSA-RP71KA

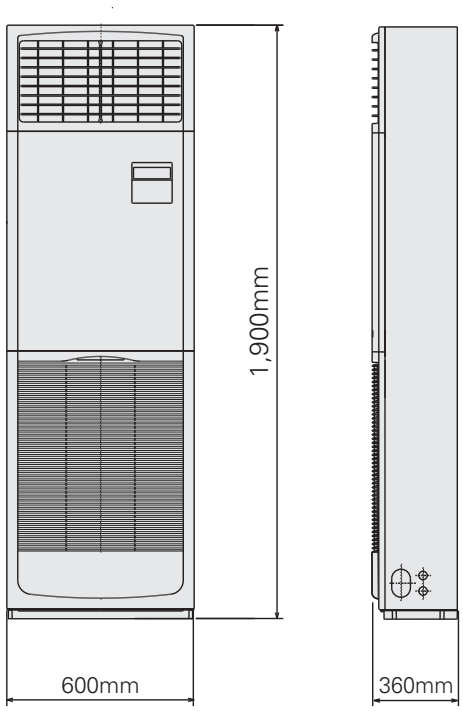


**4-way pipe work connections enable greater freedom in installation**

Remarkable freedom in choosing installation sites is allowed by providing piping connection to the indoor unit in four places: left side, back, from underneath and on the right side of the unit. Even installation in the corner of a room is easy.

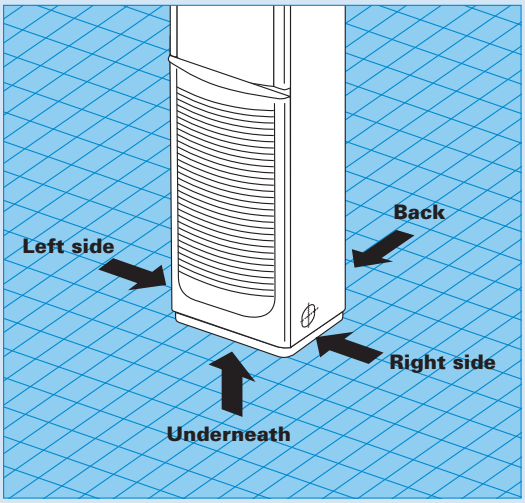


## Built-in Remote Controller

Equipped with PAR-40MAA, the latest wired remote controller. Offering excellent readability and a diverse range of functions, the remote controller increases user-friendliness and boosts user satisfaction.

### Main Functions

- Multi-language Display
- Limited Temperature Range Setting
- Auto-off Timer
- Operation Lock
- Weekly Timer

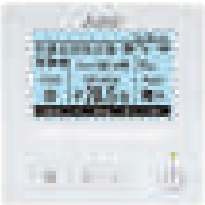

# SERIES SELECTION

## Power Inverter Series

DC Inverter | 71 Joint Lap | Vector Sine Wave | 100-250 DC Scroll | DC Fan Motor | Vector-Wave | 71-140 PAM | Power Receiver | Grooved Piping | 71 Heat Caulking Fixing Method

### Indoor Unit

R410A

PSA-RP71/100/125/140KA

### Outdoor Unit

R410A

For Single

PUHZ-ZRP71

40

R410A

For Multi
(Twin/Triple)

50

### Remote Controller

Built-in

## Standard Inverter Series

DC Inverter | Vector Sine Wave | 100-140 DC Rotary | 200/250 DC Scroll | DC Fan Motor | Vector-Wave | 100-140 PAM | Grooved Piping

### Indoor Unit

R410A

PSA-RP71/100/125/140KA

### Outdoor Unit

R410A

For Single

PUHZ-P100/125/140

R410A

For Multi
(Twin/Triple)

PUHZ-P140

### Remote Controller

Built-in

## PSZ-RP KA Indoor Unit Combinations

Indoor unit combinations shown below are possible.

| Indoor Unit Combination | | Outdoor Unit Capacity | | | | | | | | | | | | | | | | | | | |
|---|---|---|---|---|---|---|---|---|---|---|---|---|---|---|---|---|---|---|---|---|---|
| | | For Single | | | | | | | | | For Twin | | | | | | For Triple | | | For Quadruple | |
| | | 35 | 50 | 60 | 71 | 100 | 125 | 140 | 200 | 250 | 71 | 100 | 125 | 140 | 200 | 250 | 140 | 200 | 250 | 200 | 250 |
| Power Inverter (PUHZ-ZRP) | | – | – | – | 71x1 | 100x1 | 125x1 | 140x1 | – | – | – | – | – | 71x2 | 100x2 | 125x2 | – | – | 71x3 | – | – |
| | Distribution Pipe | – | – | – | – | – | – | – | – | – | – | – | – | MSDD-50TR-E | MSDD-50WR-E | | – | – | MSDT-111R-E | – | – |
| Standard Inverter (PUHZ-P) | | – | – | – | – | 100x1 | 125x1 | 140x1 | – | – | – | – | – | 71x2 | 100x2 | 125x2 | – | – | 71x3 | – | – |
| | Distribution Pipe | – | – | – | – | – | – | – | – | – | – | – | – | MSDD-50TR-E | MSDD-50WR-E | | – | – | MSDT-111R-E | – | – |

# PSA-RP SERIES
## POWER INVERTER

Demand Control (Optional) | Pure White | Long Life | Check! | SWING | ACO | Auto Restart | Low Temp Cooling | Silent | Ampere Limit (71-140V) | Group Control (Optional) | M-NET connection (Optional) | Wi-Fi Interface (Optional) | COMPO | Cleaning-free pipe replaced | Wiring Reuse (Optional) | Pump Down | Flare connection | Self Diagnosis | Failure Recall

| Type | | | | Inverter Heat Pump | | | | | | |
|---|---|---|---|---|---|---|---|---|---|---|
| Indoor Unit | | | | PSA-RP71KA | PSA-RP100KA | | PSA-RP125KA | | PSA-RP140KA | |
| Outdoor Unit | | | | PUHZ-ZRP71VHA2 | PUHZ-ZRP100VKA3 | PUHZ-ZRP100YKA3 | PUHZ-ZRP125VKA3 | PUHZ-ZRP125YKA3 | PUHZ-ZRP140VKA3 | PUHZ-ZRP140YKA3 |
| Refrigerant | | | | R410A*1 | | | | | | |
| Power Supply | Source | | | Outdoor power supply | | | | | | |
| | Outdoor (V/Phase/Hz) | | | VKA・VHA:230 / Single / 50, YKA:400 / Three / 50 | | | | | | |
| Cooling | Capacity | Rated | kW | 7.1 | 9.5 | 9.5 | 12.5 | 12.5 | 13.4 | 13.4 |
| | | Min - Max | kW | 3.3 - 8.1 | 4.9 - 11.4 | 4.9 - 11.4 | 5.5 - 14.0 | 5.5 - 14.0 | 6.2 - 15.0 | 6.2 - 15.0 |
| | Total Input | Rated | kW | 1.89 | 2.50 | 2.50 | 4.09 | 4.09 | 4.06 | 4.06 |
| | EER | | | – | – | – | 3.06 | 3.06 | 3.30 | 3.30 |
| | | EEL Rank | | – | – | – | – | – | – | – |
| | Design Load | | kW | 7.1 | 9.5 | 9.5 | – | – | – | – |
| | Annual Electricity Consumption*2 | | kWh/a | 396 | 595 | 606 | – | – | – | – |
| | SEER | | | 6.3 | 5.6 | 5.5 | – | – | – | – |
| | | Energy Efficiency Class | | A++ | A+ | A | – | – | – | – |
| Heating (Average Season) | Capacity | Rated | kW | 7.6 | 11.2 | 11.2 | 14.0 | 14.0 | 16.0 | 16.0 |
| | | Min - Max | kW | 3.5 - 10.2 | 4.5 - 14.0 | 4.5 - 14.0 | 5.0 - 16.0 | 5.0 - 16.0 | 5.7 - 18.0 | 5.7 - 18.0 |
| | Total Input | Rated | kW | 2.21 | 3.08 | 3.08 | 4.24 | 4.24 | 4.79 | 4.79 |
| | COP | | | – | – | – | 3.30 | 3.30 | 3.34 | 3.34 |
| | | EEL Rank | | – | – | – | – | – | – | – |
| | Design Load | | kW | 4.7 | 7.8 | 7.8 | – | – | – | – |
| | Declared Capacity | at reference design temperature | kW | 4.7 (–10°C) | 7.8 (–10°C) | 7.8 (–10°C) | – | – | – | – |
| | | at bivalent temperature | kW | 4.7 (–10°C) | 7.8 (–10°C) | 7.8 (–10°C) | – | – | – | – |
| | | at operation limit temperature | kW | 3.5 (–20°C) | 5.8 (–20°C) | 5.8 (–20°C) | – | – | – | – |
| | Back Up Heating Capacity | | kW | 0 | 0 | 0 | – | – | – | – |
| | Annual Electricity Consumption*2 | | kWh/a | 1666 | 2761 | 2761 | – | – | – | – |
| | SCOP | | | 4.0 | 4.0 | 4.0 | – | – | – | – |
| | | Energy Efficiency Class | | A+ | A+ | A+ | – | – | – | – |
| Operating Current (max) | | | A | 19.4 | 27.2 | 8.7 | 27.2 | 10.2 | 28.7 | 13.7 |
| Indoor Unit | Input | Rated | kW | 0.06 | 0.11 | 0.11 | 0.11 | 0.11 | 0.11 | 0.11 |
| | Operating Current (max) | | A | 0.4 | 0.71 | 0.71 | 0.73 | 0.73 | 0.73 | 0.73 |
| | Dimensions <Panel> | H × W × D | mm | 1900 - 600 - 360 | | | | | | |
| | Weight <Panel> | | kg | 46 | 46 | 46 | 46 | 46 | 48 | 48 |
| | Air Volume [Lo-Mid-Hi] | | m³/min | 20 - 22 - 24 | 25 - 28 - 30 | 25 - 28 - 30 | 25 - 28 - 31 | 25 - 28 - 31 | 25 - 28 - 31 | 25 - 28 - 31 |
| | Sound Level (SPL) [Lo-Mid-Hi] | | dB(A) | 40 - 42 - 44 | 45 - 49 - 51 | 45 - 49 - 51 | 45 - 49 - 51 | 45 - 49 - 51 | 45 - 49 - 51 | 45 - 49 - 51 |
| | Sound Level (PWL) | | dB(A) | 60 | 65 | 65 | 66 | 66 | 66 | 66 |
| Outdoor Unit | Dimensions | H × W × D | mm | 943-950-330(+30) | 1338-1050-330(+40) | | | | | |
| | Weight | | kg | 70 | 116 | 123 | 116 | 125 | 118 | 131 |
| | Air Volume | Cooling | m³/min | 55.0 | 110.0 | 110.0 | 120.0 | 120.0 | 120.0 | 120.0 |
| | | Heating | m³/min | 55.0 | 110.0 | 110.0 | 120.0 | 120.0 | 120.0 | 120.0 |
| | Sound Level (SPL) | Cooling | dB(A) | 47 | 49 | 49 | 50 | 50 | 50 | 50 |
| | | Heating | dB(A) | 48 | 51 | 51 | 52 | 52 | 52 | 52 |
| | Sound Level (PWL) | Cooling | dB(A) | 67 | 69 | 69 | 70 | 70 | 70 | 70 |
| | Operating Current (max) | | A | 19.0 | 26.5 | 8.0 | 26.5 | 9.5 | 28.0 | 13.0 |
| | Breaker Size | | A | 25 | 32 | 16 | 32 | 16 | 40 | 16 |
| Ext. Piping | Diameter | Liquid / Gas | mm | 9.52 / 15.88 | 9.52 / 15.88 | 9.52 / 15.88 | 9.52 / 15.88 | 9.52 / 15.88 | 9.52 / 15.88 | 9.52 / 15.88 |
| | Max. Length | Out-In | m | 50 | 75 | 75 | 75 | 75 | 75 | 75 |
| | Max. Height | Out-In | m | 30 | 30 | 30 | 30 | 30 | 30 | 30 |
| Guaranteed Operating Range [Outdoor] | | Cooling*3 | °C | –15 ~ +46 | –15 ~ +46 | –15 ~ +46 | –15 ~ +46 | –15 ~ +46 | –15 ~ +46 | –15 ~ +46 |
| | | Heating | °C | –20 ~ +21 | –20 ~ +21 | –20 ~ +21 | –20 ~ +21 | –20 ~ +21 | –20 ~ +21 | –20 ~ +21 |

*1 Refrigerant leakage contributes to climate change. Refrigerant with lower global warming potential (GWP) would contribute less to global warming than a refrigerant with higher GWP, if leaked to the atmosphere. This appliance contains a refrigerant fluid with a GWP equal to 1975. This means that if 1 kg of this refrigerant fluid would be leaked to the atmosphere, the impact on global warming would be 1975 times higher than 1 kg of $CO_2$, over a period of 100 years. Never try to interfere with the refrigerant circuit yourself or disassemble the product yourself and always ask a professional.
The GWP of R410A is 2088 in the IPCC 4th Assessment Report.
*2 Energy consumption based on standard test results. Actual energy consumption will depend on how the appliance is used and where it is located.
*3 Optional air protection guide is required where ambient temperature is lower than –5°C.

# PSA-RP SERIES
## STANDARD INVERTER

Demand Control (Optional) | Pure White | Long Life | Check! | SWING | ACO | Auto Restart | Low Temp Cooling | Silent | Group Control (Optional) | M-NET connection (Optional) | Wi-Fi Interface (Optional) | COMPO | Cleaning-free pipe replaced | Wiring Reuse (Optional) | Pump Down | Flare connection | Self Diagnosis | Failure Recall

| Type | | | | Inverter Heat Pump | | | | | |
|---|---|---|---|---|---|---|---|---|---|
| Indoor Unit | | | | PSA-RP100KA | | PSA-RP125KA | | PSA-RP140KA | |
| Outdoor Unit | | | | PUHZ-P100VKA | PUHZ-P100YKA | PUHZ-P125VKA | PUHZ-P125YKA | PUHZ-P140VKA | PUHZ-P140YKA |
| Refrigerant | | | | R410A*1 | | | | | |
| Power Supply | Source | | | Outdoor power supply | | | | | |
| | Outdoor (V/Phase/Hz) | | | VKA:230 / Single / 50, YKA:400 / Three / 50 | | | | | |
| Cooling | Capacity | Rated | kW | 9.4 | 9.4 | 12.1 | 12.1 | 13.6 | 13.6 |
| | | Min - Max | kW | 3.7 - 10.6 | 3.7 - 10.6 | 5.6 - 13.0 | 5.6 - 13.0 | 5.8 - 13.7 | 5.8 - 13.7 |
| | Total Input | Rated | kW | 3.12 | 3.12 | 5.02 | 5.02 | 6.38 | 6.38 |
| | EER | | | 3.01 | 3.01 | 2.41 | 2.41 | 2.13 | 2.13 |
| | | EEL Rank | | – | – | – | – | – | – |
| | Design Load | | kW | 9.4 | 9.4 | – | – | – | – |
| | Annual Electricity Consumption*2 | | kWh/a | 644 | 644 | – | – | – | – |
| | SEER | | | 5.1 | 5.1 | – | – | – | – |
| | | Energy Efficiency Class | | A | A | – | – | – | – |
| Heating (Average Season) | Capacity | Rated | kW | 11.2 | 11.2 | 13.5 | 13.5 | 15.0 | 15.0 |
| | | Min - Max | kW | 2.8 - 12.5 | 2.8 - 12.5 | 4.8 - 15.0 | 4.8 - 15.0 | 4.9 - 15.8 | 4.9 - 15.8 |
| | Total Input | Rated | kW | 3.28 | 3.28 | 4.80 | 4.80 | 4.82 | 4.82 |
| | COP | | | 3.41 | 3.41 | 2.81 | 2.81 | 3.11 | 3.11 |
| | | EEL Rank | | – | – | – | – | – | – |
| | Design Load | | kW | 8.0 | 8.0 | – | – | – | – |
| | Declared Capacity | at reference design temperature | kW | 6.0 (–10°C) | 6.0 (–10°C) | – | – | – | – |
| | | at bivalent temperature | kW | 7.0 (–7°C) | 7.0 (–7°C) | – | – | – | – |
| | | at operation limit temperature | kW | 4.5 (–15°C) | 4.5 (–15°C) | – | – | – | – |
| | Back Up Heating Capacity | | kW | 2.0 | 2.0 | – | – | – | – |
| | Annual Electricity Consumption*2 | | kWh/a | 2794 | 2794 | – | – | – | – |
| | SCOP | | | 4.0 | 4.0 | – | – | – | – |
| | | Energy Efficiency Class | | A+ | A+ | – | – | – | – |
| Operating Current (max) | | | A | 20.7 | 12.2 | 27.2 | 12.2 | 30.7 | 12.2 |
| Indoor Unit | Input | Rated | kW | 0.11 | 0.11 | 0.11 | 0.11 | 0.11 | 0.11 |
| | Operating Current (max) | | A | 0.71 | 0.71 | 0.73 | 0.73 | 0.73 | 0.73 |
| | Dimensions <Panel> | H × W × D | mm | 1900 - 600 - 360 | | | | | |
| | Weight <Panel> | | kg | 46 | 46 | 46 | 46 | 48 | 48 |
| | Air Volume [Lo-Mid-Hi] | | m³/min | 25 - 28 - 30 | 25 - 28 - 30 | 25 - 28 - 31 | 25 - 28 - 31 | 25 - 28 - 31 | 25 - 28 - 31 |
| | Sound Level (SPL) [Lo-Mid-Hi] | | dB(A) | 45 - 49 - 51 | 45 - 49 - 51 | 45 - 49 - 51 | 45 - 49 - 51 | 45 - 49 - 51 | 45 - 49 - 51 |
| | Sound Level (PWL) | | dB(A) | 65 | 65 | 66 | 66 | 66 | 66 |
| Outdoor Unit | Dimensions | H × W × D | mm | 981 - 1050 - 330 | | 981 - 1050 - 330 | | 981 - 1050 - 330 | |
| | Weight | | kg | 76 | 78 | 84 | 85 | 84 | 85 |
| | Air Volume | Cooling | m³/min | 79 | 79 | 86 | 86 | 86 | 86 |
| | | Heating | m³/min | 79 | 79 | 92 | 92 | 92 | 92 |
| | Sound Level (SPL) | Cooling | dB(A) | 51 | 51 | 54 | 54 | 56 | 56 |
| | | Heating | dB(A) | 54 | 54 | 56 | 56 | 57 | 57 |
| | Sound Level (PWL) | Cooling | dB(A) | 70 | 70 | 72 | 72 | 75 | 75 |
| | Operating Current (max) | | A | 20.0 | 11.5 | 26.5 | 11.5 | 30.0 | 11.5 |
| | Breaker Size | | A | 32 | 16 | 32 | 16 | 40 | 16 |
| Ext. Piping | Diameter | Liquid / Gas | mm | 9.52 / 15.88 | 9.52 / 15.88 | 9.52 / 15.88 | 9.52 / 15.88 | 9.52 / 15.88 | 9.52 / 15.88 |
| | Max. Length | Out-In | m | 50 | 50 | 50 | 50 | 50 | 50 |
| | Max. Height | Out-In | m | 30 | 30 | 30 | 30 | 30 | 30 |
| Guaranteed Operating Range [Outdoor] | | Cooling*3 | °C | –15 ~ +46 | –15 ~ +46 | –15 ~ +46 | –15 ~ +46 | –15 ~ +46 | –15 ~ +46 |
| | | Heating | °C | –15 ~ +21 | –15 ~ +21 | –15 ~ +21 | –15 ~ +21 | –15 ~ +21 | –15 ~ +21 |

*1 Refrigerant leakage contributes to climate change. Refrigerant with lower global warming potential (GWP) would contribute less to global warming than a refrigerant with higher GWP, if leaked to the atmosphere. This appliance contains a refrigerant fluid with a GWP equal to 1975. This means that if 1 kg of this refrigerant fluid would be leaked to the atmosphere, the impact on global warming would be 1975 times higher than 1 kg of $CO_2$, over a period of 100 years. Never try to interfere with the refrigerant circuit yourself or disassemble the product yourself and always ask a professional.
The GWP of R410A is 2088 in the IPCC 4th Assessment Report.
*2 Energy consumption based on standard test results. Actual energy consumption will depend on how the appliance is used and where it is located.
*3 Optional air protection guide is required where ambient temperature is lower than –5°C.

# MULTI SPLIT

SERIES

# SELECTION

Choose from types of indoor units and outdoor units that can run up to six indoor units each.
Create the system that best matches room shapes and number of rooms.

## R32 INDOOR UNITS

### Wall-mounted

MSZ-LN (18•25•35•50)

MSZ-EF

MSZ-AP25-50
MSZ-AP15-20

MSZ-AP60VG

MSZ-BT

### Cassette

SLZ

MLZ-KP

### Floor-standing

MFZ-KT

### Ceiling-suspended

PCA

### Ceiling-concealed

SEZ

PEAD

## R32 OUTDOOR UNITS

### 2-port
up to 2 indoor units

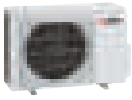
MXZ-2F33VF3
MXZ-2F42VF3
MXZ-2F53VF(H)3

MXZ-2F53VFHZ

### 3-port
up to 3 indoor units

MXZ-3F54VF3
MXZ-3F68VF3

### 4-port
up to 4 indoor units

MXZ-4F72VF3
MXZ-4F80VF3

MXZ-4F83VF

MXZ-4F83VFHZ

### 5-port
up to 5 indoor units

MXZ-5F102VF

### 6-port
up to 6 indoor units

MXZ-6F122VF

## R410A INDOOR UNITS

### Wall-mounted

MSZ-LN (25•35)

MSZ-AP25-50
MSZ-AP15-20

MSZ-SF25-50
MSZ-SF15-20

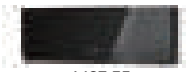
MSZ-EF

MSZ-GF

### Cassette

SLZ

MLZ-KP

PLA

### Floor-standing

MFZ-KJ

### Ceiling-suspended

PCA

### Ceiling-concealed

SEZ

PEAD

## R410A OUTDOOR UNITS

### 2-port
up to 2 indoor units

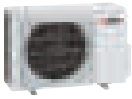
MXZ-2D33VA
MXZ-2D42VA2
MXZ-2D53VA(H)2
MXZ-2E53VAHZ

### 3-port
up to 3 indoor units

MXZ-3E54VA
MXZ-3E68VA

### 4-port
up to 4 indoor units

MXZ-4E72VA

MXZ-4E83VA
MXZ-4E83VAHZ

### 5-port
up to 5 indoor units

MXZ-5E102VA

### 6-port
up to 6 indoor units

MXZ-6D122VA2

## CHECK SYSTEM COMPATIBILITY

Possible combinations depends on the outdoor unit chosen. Please check the following points.

**Check Indoor Units**

Refer to the "Indoor Unit Compatibility Table" to check if the indoor units selected can be used with the outdoor unit selected. (Indoor units not listed in the table cannot be used.)

**Check Indoor Unit Capacity Combination**

Refer to the "Combination Table" to check if the capacity combination of the indoor unit selected is connectable. (Combinations not listed cannot be connected.)

**If the desired combination cannot be found, please change either the indoor or outdoor unit to match one of the combinations shown in the tables.**

# MXZ SERIES

Advancements in the MXZ Series include efficiency and flexibility in system expansion capabilities. The best solution when requiring multi-system air conditioning needs.

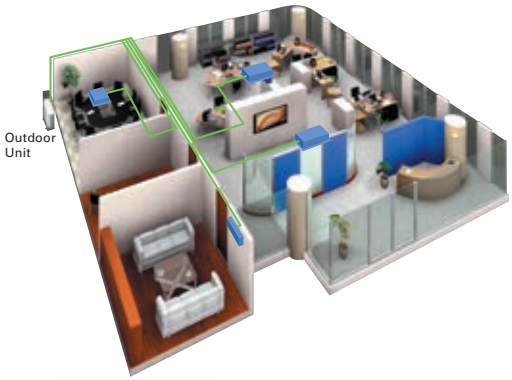


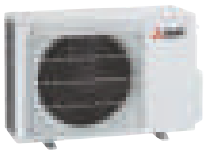

R32

2-port

MXZ-2F33VF3
MXZ-2F42VF3
MXZ-2F53VF(H)3

R32

3-port 4-port 5-port

MXZ-3F54VF3
MXZ-3F68VF3
MXZ-4F72VF3
MXZ-4F80VF3
MXZ-4F83VF
MXZ-5F102VF

R32

6-port

MXZ-6F122VF

EXAMPLE SYSTEM

MXZ-4F72VF system

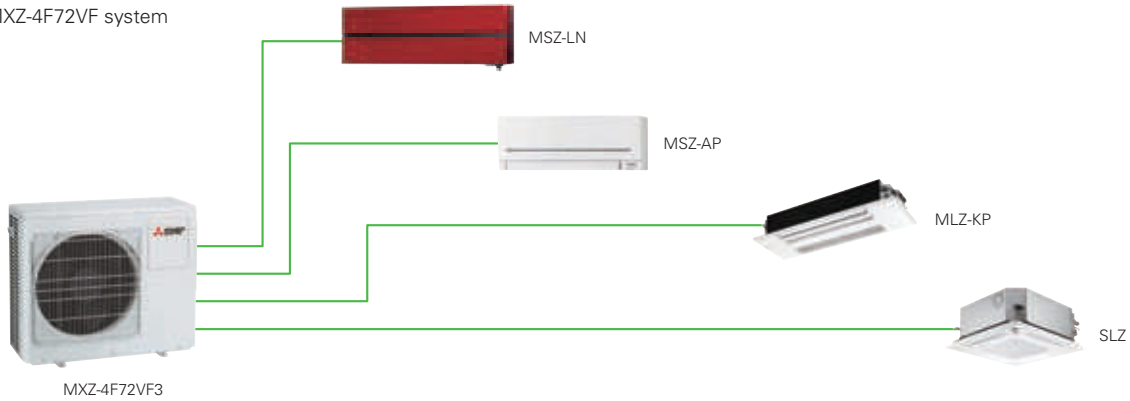


## No necessity for refrigerant charging

Depending on the pipe length and the indoor units that are connected, conventional models have required refrigerant charging, but no R32 MXZ model needs to be charged with additional refrigerant. This eliminates troublesome work at the site of installation, and reduces the amount of additional work for the installer.

## Handle Up to 4 Rooms with a Single Outdoor Unit

The MXZ Series for R32 offers a seven-system line-up to choose from, ranging between 3.3 and 8.0kW. All of them are compatible with specific M, S and P series indoor units. A single outdoor unit can handle a wide range of building layouts.

# Support Functions

## Wiring/Piping Correction Function* (3F54/3F68/4F72/4F80)

Simply press a single button to confirm if wiring and piping are properly connected. Wiring errors are corrected automatically when discovered. This eliminates the need to confirm complicated wiring connections when expanding the system. (For details, refer to the outdoor unit installation manual.)

* Function cannot be used when the outdoor temperature is below 0°C.
The correction process requires 10–20 minutes to complete and must be conducted with the unit set to the "Cooling" mode.

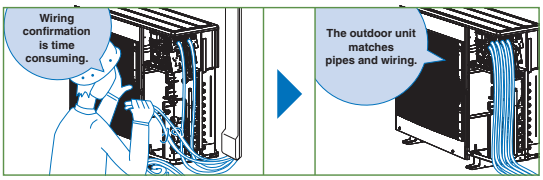


## Operation Lock

To accommodate specific use applications, cooling or heating operation can be specified when setting the control board of the outdoor unit. A convenient option when a system needs to be configured for exclusive cooling or heating service. (For details, refer to the outdoor unit installation manual.)

# MXZ SERIES
INVERTER MULTI

DC Inverter | Joint Lap | DC Fan Motor | PAM | 3F-4F72 Power Receiver | Grooved Piping

| Type (Inverter Multi - Split Heat Pump) | | | | Up to 2 Indoor Units | | | | Up to 3 Indoor Units | | Up to 4 Indoor Units | |
|---|---|---|---|---|---|---|---|---|---|---|---|
| Indoor Unit | | | | Please refer to *4 | | | | | | | |
| Outdoor Unit | | | | MXZ-2F33VF3 | MXZ-2F42VF3 | MXZ-2F53VF3 | MXZ-2F53VFH3 | MXZ-3F54VF3 | MXZ-3F68VF3 | MXZ-4F72VF3 | MXZ-4F80VF3 |
| Refrigerant | | | | R32*1 | | | | | | | |
| Power Supply | Source | | | Outdoor power supply | | | | | | | |
| | Outdoor (V/Phase/Hz) | | | 220 - 230 - 240V / Single / 50Hz | | | | | | | |
| Cooling | Capacity | Rated | kW | 3.3 | 4.2 | 5.3 | 5.3 | 5.4 | 6.8 | 7.2 | 8.0 |
| | Input | Rated | kW | 0.85 | 0.98 | 1.40 | 1.40 | 1.32 | 1.84 | 1.85 | 2.25 |
| | EER*4 | | | 3.88 | 4.29 | 3.79 | 3.79 | 4.10 | 3.70 | 3.89 | 3.56 |
| | Design Load | | kW | 3.3 | 4.2 | 5.3 | 5.3 | 5.4 | 6.8 | 7.2 | 8.0 |
| | Annual Electricity Consumption*2 | | kWh/a | 189 | 169 | 216 | 216 | 222 | 301 | 311 | 368 |
| | SEER*4 | | | 6.1 | 8.7 | 8.6 | 8.6 | 8.5 | 7.9 | 8.1 | 7.6 |
| | | Energy Efficiency Class*4 | | A++ | A+++ | A+++ | A+++ | A+++ | A++ | A++ | A++ |
| Heating (Average Season) | Capacity | Rated | kW | 4.0 | 4.5 | 6.4 | 6.4 | 7.0 | 8.6 | 8.6 | 8.8 |
| | Input | Rated | kW | 0.91 | 0.88 | 1.56 | 1.56 | 1.40 | 1.91 | 1.87 | 2.00 |
| | COP*4 | | | 4.40 | 5.11 | 4.10 | 4.10 | 5.00 | 4.50 | 4.60 | 4.40 |
| | Design Load | | kW | 2.7 | 3.5 | 3.5 | 3.5 | 5.2 | 6.8 | 7.0 | 7.0 |
| | Declared Capacity | at reference design temperature | kW | 2.2 | 2.7 | 2.7 | 2.7 | 4.2 | 5.7 | 5.6 | 5.6 |
| | | at bivalent temperature | kW | 2.4 | 2.9 | 2.9 | 2.9 | 4.7 | 6.4 | 6.2 | 6.2 |
| | | at operation limit temperature | kW | 1.6 | 2.3 | 2.3 | 2.1 | 3.2 | 4.6 | 4.8 | 4.8 |
| | Back Up Heating Capacity | | kW | 0.5 | 0.8 | 0.8 | 0.8 | 1.0 | 1.1 | 1.4 | 1.4 |
| | Annual Electricity Consumption*2 | | kWh/a | 944 | 1065 | 1065 | 1089 | 1583 | 2321 | 2389 | 2389 |
| | SCOP*4 | | | 4.0 | 4.6 | 4.6 | 4.5 | 4.6 | 4.1 | 4.1 | 4.1 |
| | | Energy Efficiency Class*4 | | $A^{+}$ | $A^{++}$ | $A^{++}$ | $A^{+}$ | $A^{++}$ | $A^{+}$ | $A^{+}$ | $A^{+}$ |
| Operating Current (max) | | | A | 10.0 | 12.2 | 12.2 | 12.2 | 18.0 | 18.0 | 18.0 | 18.0 |
| Outdoor Unit | Dimensions | H × W × D | mm | 550 - 800 (+69) - 285 (+59.5) | | | | 710 - 840 (+30) - 330 (+66) | | | |
| | Weight | | kg | 33 | 37 | 37 | 38 | 58 | 58 | 59 | 59 |
| | Air Volume | Cooling | $m^3$/min | 31.5 | 28.4 | 32.7 | 32.7 | 31 | 35.4 | 35.4 | 40.3 |
| | | Heating | $m^3$/min | 32.3 | 33.5 | 34.7 | 34.7 | 31 | 39.6 | 42.7 | 44.1 |
| | Sound Level (SPL) | Cooling | dB(A) | 49 | 44 | 46 | 46 | 46 | 48 | 48 | 50 |
| | | Heating | dB(A) | 50 | 50 | 51 | 51 | 50 | 53 | 54 | 55 |
| | Sound Level (PWL) | Cooling | dB(A) | 60 | 59 | 61 | 61 | 60 | 63 | 63 | 65 |
| | Operating Current | Cooling | A | 4.3 - 4.1 - 3.9 | 4.9 - 4.7 - 4.5 | 6.5 - 6.2 - 6.0 | 6.5 - 6.2 - 6.0 | 6.0 - 5.7 - 5.5 | 8.4 - 8.0 - 7.7 | 8.5 - 8.1 - 7.8 | 10.3 - 9.9 - 9.5 |
| | | Heating | A | 4.6 - 4.4 - 4.2 | 4.4 - 4.3 - 4.1 | 7.5 - 7.1 - 6.8 | 7.5 - 7.1 - 6.8 | 6.4 - 6.1 - 5.9 | 8.8 - 8.4 - 8.0 | 8.6 - 8.2 - 7.9 | 9.2 - 8.8 - 8.4 |
| | Breaker Size | | A | 15 | 15 | 15 | 15 | 25 | 25 | 25 | 25 |
| Ext. Piping | Port Diameter | Liquid / Gas | mm | 6.35 × 2 / 9.52 × 2 | 6.35 × 2 / 9.52 × 2 | 6.35 × 2 / 9.52 × 2 | 6.35 × 2 / 9.52 × 2 | 6.35 × 3 / 9.52 × 3 | 6.35 × 3 / 9.52 × 3 | 6.35 × 4 / 12.7 × 1 + 9.52 × 3 | |
| | Total Piping Length (max) | | m | 20 | 30 | 30 | 30 | 50 | 60 | 60 | 60 |
| | Each Indoor Unit Piping Length (max) | | m | 15 | 20 | 20 | 20 | 25 | 25 | 25 | 25 |
| | Max. Height | | m | 10 | 15(15)*3 | 15(15)*3 | 15(15)*3 | 15(15)*3 | 15(15)*3 | 15(15)*3 | 15(15)*3 |
| | Chargeless Length | | m | 20 | 30 | 30 | 30 | 50 | 60 | 60 | 60 |
| Guaranteed Operating Range [Outdoor] | | Cooling | ℃ | –10 ~ +46 | | | | | | | |
| | | Heating | ℃ | –15 ~ +24 | | | | | | | |

*1 Refrigerant leakage contributes to climate change. Refrigerant with lower global warming potential (GWP) would contribute less to global warming than a refrigerant with higher GWP, if leaked to the atmosphere. This appliance contains a refrigerant fluid with a GWP equal to 550. This means that if 1 kg of this refrigerant fluid would be leaked to the atmosphere, the impact on global warming would be 550 times higher than 1 kg of $CO_2$, over a period of 100 years. Never try to interfere with the refrigerant circuit yourself or disassemble the product yourself and always ask a professional.
The GWP of R32 is 675 in the IPCC 4th Assessment Report.

*2 Energy consumption based on standard test results.
Actual energy consumption will depend on how the appliance is used and where it is located.

*3 If the outdoor unit is installed higher than the indoor unit, max. height is reduced to 15m.

*4 EER/COP, SEER/SCOP values and energy efficiency class are measured when connected to the indoor units listed below.

| | |
|---|---|
| MXZ-2F33VF3 | MSZ-AP15VG + MSZ-LN18VG2 |
| MXZ-2F42VF3 | MSZ-LN18VG2 + MSZ-LN25VG2 |
| MXZ-2F53VF(H)3 | MSZ-LN18VG2 + MSZ-LN35VG2 |
| MXZ-3F54VF3 | MSZ-LN18VG2 + MSZ-LN18VG2 + MSZ-LN18VG2 |
| MXZ-3F68VF3 | MSZ-LN18VG2 + MSZ-LN25VG2 + MSZ-LN25VG2 |
| MXZ-4F72VF3 | MSZ-LN18VG2 + MSZ-LN18VG2 + MSZ-LN18VG2 + MSZ-LN18VG2 |
| MXZ-4F80VF3 | MSZ-LN18VG2 + MSZ-LN18VG2 + MSZ-LN18VG2 + MSZ-LN25VG2 |

# MXZ SERIES
INVERTER MULTI

| Type (Inverter Multi - Split Heat Pump) | | | | Up to 4 Indoor Units | Up to 5 Indoor Units | Up to 6 Indoor Units |
|---|---|---|---|---|---|---|
| Indoor Unit | | | | | Please refer to *4 | |
| Outdoor Unit | | | | MXZ-4F83VF | MXZ-5F102VF | MXZ-6F122VF |
| Refrigerant | | | | R32*1 | R32*1 | R32*1 |
| **Power Supply** | **Source** | | | Outdoor power supply | | |
| | **Outdoor (V/Phase/Hz)** | | | 220 - 230 - 240V / Single / 50Hz | | |
| **Cooling** | **Capacity** | Rated | kW | 8,3 | 10,2 | 12,2 |
| | | Min-Max | kW | 3.7 - 9.2 | 3.9 - 11.0 | 3.5 - 14.0 |
| | **Input** | Rated | kW | 1,97 | 2,80 | 3,66 |
| | **EER*4** | | | 4,21 | 3,64 | 3,33 |
| | **Design Load** | | kW | 8,3 | 10,2 | 12,2 |
| | **Annual Electricity Consumption*2** | | kWh/a | 342 | 436 | 559 |
| | **SEER*4** | | | 8,5 | 8,2 | 303,0% |
| | | **Energy Efficiency Class*4** | | A+++ | A++ | - |
| **Heating (Average Season)** | **Capacity** | Rated | kW | 9,3 | 10,5 | 14,0 |
| | | Rated (-7°C) | kW | 6,2 | 6,4 | 7,17 |
| | | Rated (-7°C) | kW | 6,20 | 6,40 | 7,17 |
| | | Max (-15°C) | kW | 4,90 | 4,90 | 5,20 |
| | | Min-Max | kW | 3.4 - 11.6 | 4.1 - 14.0 | 3.5 - 16.0 |
| | **Input** | Rated | kW | 2,00 | 2,28 | 3,31 |
| | **COP*4** | | | 4,65 | 4,60 | 4,23 |
| | **Design Load** | | kW | 7,0 | 7,4 | 8,1 |
| | **Declared Capacity** | at reference design temperature | kW | 5,80 | 5,90 | 6,50 |
| | | at bivalent temperature | kW | 6,20 | 6,40 | 7,17 |
| | | at operation limit temperature | kW | 4,90 | 4,90 | 5,20 |
| | **Back Up Heating Capacity** | | kW | 1,20 | 1,50 | 1,60 |
| | **Annual Electricity Consumption*2** | | kWh/a | 2087 | 2205 | 2438 |
| | **SCOP*4** | | | 4,7 | 4,7 | 183,1% |
| | | **Energy Efficiency Class*4** | | A++ | A++ | - |
| **Max. Operating Current (Indoor+Outdoor)** | | | A | 21,4 | 21,4 | 29,8 |
| **Outdoor Unit** | **Dimensions** | H × W × D | mm | 796-950-330 | 796-950-330 | 1048-950-330 |
| | **Weight** | | kg | 62 | 62 | 87 |
| | **Air Volume** | Cooling | $m^3$/min | 57 | 63 | 63 |
| | | Heating | $m^3$/min | 62 | 75 | 77 |
| | **Sound Level (SPL)** | Cooling | dB(A) | 49 | 52 | 55 |
| | | Heating | dB(A) | 51 | 56 | 57 |
| | **Sound Level (PWL)** | Cooling | dB(A) | 61 | 65 | 69 / 74 |
| | **Operating Current** | Cooling | A | 9.1 - 8.7 - 8.3 | 12.9 - 12.3 - 11.8 | 16.8 - 16.1 - 15.4 |
| | | Heating | A | 9.2 - 8.8 - 8.4 | 10.5 - 10.0 - 9.6 | 15.2 - 14.5 - 13.9 |
| | **Starting current (Total)** | | A | 8,8 | 12,3 | 16,1 |
| | **Breaker Size** | | A | 25 | 25 | 32 |
| **Ext. Piping** | **Port Diameter** | Liquid | mm | 6.35x4 | 6.35x5 | 6.35x6 |
| | | Gas | mm | 12.7 x 1+9.52 x 3 | 12.7 x 1+9.52 x 4 | 12.7 x 1+9.52 x 5 |
| | **Total Piping Length (max)** | | m | 70 | 80 | 80 |
| | **Each Indoor Unit Piping Length (max)** | | m | 25 | 25 | 25 |
| | **Max. Height** | | m | 15 | 15 | 15 |
| | **Chargeless Length** | | m | 70 | 80 | 80 |
| **Guaranteed Operating Range** [Outdoor] | | Cooling | °C | -10 ~ +46 | -10 ~ +46 | -10 ~ +46 |
| | | Heating | °C | -15 ~ +24 | -15 ~ +24 | -15 ~ +24 |

*1 Refrigerant leakage contributes to climate change. Refrigerant with lower global warming potential (GWP) would contribute less to global warming than a refrigerant with higher GWP, if leaked to the atmosphere. This appliance contains a refrigerant fluid with a GWP equal to 550. This means that if 1 kg of this refrigerant fluid would be leaked to the atmosphere, the impact on global warming would be 550 times higher than 1 kg of CO 2 , over a period of 100 years. Never try to interfere with the refrigerant circuit yourself or disassemble the product yourself and always ask a professional.
**The GWP of R32 is 675 in the IPCC 4th Assesment Report.**

# MXZ SERIES

Advancements in the MXZ Series include efficiency and flexibility in system expansion capabilities. The best solution when requiring multi-system air conditioning needs.

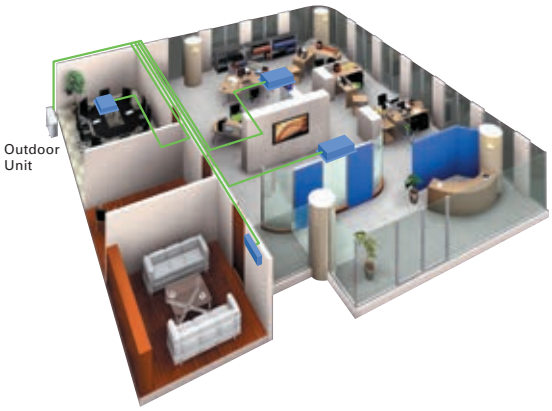

R410A

2-port

MXZ-2D33VA
MXZ-2D42VA2
MXZ-2D53VA(H)2

R410A

3-port 4-port

MXZ-3E54VA
MXZ-3E68VA
MXZ-4E72VA

R410A

4-port 5-port

MXZ-4E83VA
MXZ-5E102VA

R410A

6-port

MXZ-6D122VA2

EXAMPLE SYSTEM

MXZ-6D122VA2 system

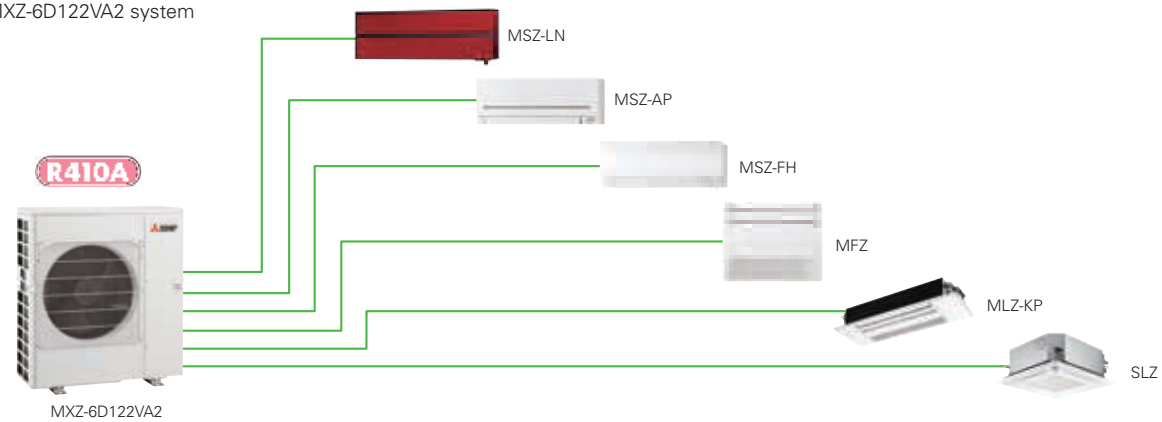


## Handle Up to 6 Rooms with a Single Outdoor Unit

The MXZ Series offers a nine-system line-up to choose from, ranging between 3.3 and 12.2kW. All of them are compatible with specific M, S and P series indoor units. A single outdoor unit can handle a wide range of building layouts.

# Support Functions

## Wiring/Piping Correction Function* (3E54/3E68/4E72/4E83/5E102/6D122)

Simply press a single button to confirm if wiring and piping are properly connected. Wiring errors are corrected automatically when discovered. This eliminates the need to confirm complicated wiring connections when expanding the system. (For details, refer to the outdoor unit installation manual.)

* Function cannot be used when the outdoor temperature is below 0°C.
The correction process requires 10–20 minutes to complete and must be conducted with the unit set to the "Cooling" mode.

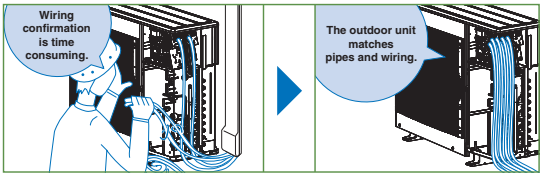


## Ampere Limit Adjustment*
(4E83/5E102/6D122)

Dipswitch settings can be used to adjust the maximum electrical current for operation. This function is highly recommended for managing energy costs. (For details, refer to the outdoor unit installation manual.)

* Maximum capacity is lowered with the use of this function.

## Operation Lock

To accommodate specific use applications, cooling or heating operation can be specified when setting the control board of the outdoor unit. A convenient option when a system needs to be configured for exclusive cooling or heating service. (For details, refer to the outdoor unit installation manual.)

# MXZ SERIES
INVERTER MULTI

| Type (Inverter Multi - Split Heat Pump) | | | | Up to 2 Indoor Units | | | | Up to 3 Indoor Units | | Up to 4 Indoor Units | | Up to 5 Indoor Units |
|---|---|---|---|---|---|---|---|---|---|---|---|---|
| Indoor Unit | | | | Please refer to (*4) | | | | | | | | |
| Outdoor Unit | | | | N: MXZ-2D33VA | N: MXZ-2D42VA2 | N: MXZ-2D53VA2 | N: MXZ-2D53VAH2 | N: MXZ-3E54VA | N: MXZ-3E68VA | N: MXZ-4E72VA | MXZ-4E83VA | MXZ-5E102VA |
| Refrigerant | | | | R410A*1 | | | | | | | | |
| Power Supply | Source | | | Outdoor power supply | | | | | | | | |
| | Outdoor (V/Phase/Hz) | | | 220 - 230 - 240V / Single / 50 | | | | | | | | |
| Cooling | Capacity | Rated | kW | 3.3 | 4.2 | 5.3 | 5.3 | 5.4 | 6.8 | 7.2 | 8.3 | 10.2 |
| | | Min - Max | kW | 1.1 - 3.8 | 1.1 - 4.4 | 1.1 - 5.6 | 1.1 - 5.6 | 2.9 - 6.8 | 2.9 - 8.4 | 3.7 - 8.8 | 3.7 - 9.2 | 3.9 - 11.0 |
| | Input (Indoor+Outdoor) | Rated | kW | 0.90 | 1.00 | 1.54 | 1.54 | 1.35 | 2.19 | 2.25 | 2.44 | 3.15 |
| | Design Load | | kW | 3.3 | 4.2 | 5.3 | 5.3 | 5.4 | 6.8 | 7.2 | 8.3 | 10.2 |
| | Annual Electricity Consumption*2 | | kWh/a | 211 | 216 | 262 | 262 | 295 | 425 | 443 | 460 | 537 |
| | SEER*4 | | | 5.5 | 6.8 | 7.1 | 7.1 | 6.4 | 5.6 | 5.7 | 6.3 | 6.6 |
| | | Energy Efficiency Class*4 | | A | A++ | A++ | A++ | A++ | A+ | A+ | A++ | A++ |
| Heating (Average Season) | Capacity | Rated | kW | 4.0 | 4.5 | 6.4 | 6.4 | 7.0 | 8.6 | 8.6 | 9.3 | 10.5 |
| | | Min - Max | kW | 1.0 - 4.1 | 1.0 - 4.8 | 1.0 - 7.0 | 1.0 - 7.0 | 2.6 - 9.0 | 2.6 - 10.6 | 3.4 - 10.7 | 3.4 - 11.6 | 4.1 - 14.0 |
| | Input (Indoor+Outdoor) | Rated | kW | 0.96 | 0.93 | 1.70 | 1.70 | 1.59 | 2.38 | 2.28 | 2.00 | 2.34 |
| | Design Load | | kW | 2.7 | 3.2 | 4.5 | 4.5 | 5.0 | 6.8 | 7.0 | 8.7 | 8.9 |
| | Declared Capacity | at reference design temperature | kW | 2.1 | 2.7 | 3.7 | 3.6 | 4.0 | 5.4 | 5.6 | 7.1 | 7.3 |
| | | at bivalent temperature | kW | 2.4 | 3.0 | 4.0 | 4.0 | 4.49 | 6.0 | 6.2 | 7.8 | 7.9 |
| | | at operation limit temperature | kW | 1.7 | 2.3 | 3.3 | 3.0 | 3.17 | 4.4 | 4.7 | 6.0 | 6.3 |
| | Back Up Heating Capacity | | kW | 0.6 | 0.5 | 0.8 | 0.9 | 1.0 | 1.4 | 1.4 | 1.6 | 1.6 |
| | Annual Electricity Consumption*2 | | kWh/a | 926 | 1065 | 1507 | 1546 | 1751 | 2466 | 2516 | 2889 | 2958 |
| | SCOP*4 | | | 4.1 | 4.2 | 4.2 | 4.1 | 4.0 | 3.9 | 3.9 | 4.2 | 4.2 |
| | | Energy Efficiency Class*4 | | A+ | A+ | A+ | A+ | A+ | A | A | A+ | A+ |
| Max. Operating Current (Indoor+Outdoor) | | | A | 10.0 | 12.2 | 12.2 | 12.2 | 18.0 | 18.0 | 18.0 | 21.4 | 21.4 |
| Outdoor Unit | Dimensions | H × W × D | mm | 550 - 800(+69) - 285(+59.5) | | | | 710 - 840(+30) - 330(+66) | | | 796 - 950 - 330 | |
| | Weight | | kg | 32 | 37 | 37 | 38 | 58 | 58 | 59 | 63 | 64 |
| | Air Volume | Cooling | $m^3$/min | 32.9 | 27.7 | 32.9 | 32.9 | 42.1 | 42.1 | 42.1 | 55.6 | 65.1 |
| | | Heating | $m^3$/min | 33.7 | 33.3 | 33.3 | 33.3 | 43.0 | 43.0 | 43.0 | 55.6 | 68.0 |
| | Sound Level (SPL) | Cooling | dB(A) | 49 | 46 | 50 | 50 | 50 | 50 | 50 | 49 | 52 |
| | | Heating | dB(A) | 50 | 51 | 53 | 53 | 53 | 53 | 53 | 51 | 56 |
| | Sound Level (PWL) | Cooling | dB(A) | 63 | 60 | 64 | 64 | 64 | 64 | 64 | 61 | 65 |
| | Breaker Size | | A | 10 | 15 | 15 | 15 | 25 | 25 | 25 | 25 | 25 |
| Ext. Piping | Diameter | Liquid | mm | 6.35 × 2 | 6.35 × 2 | 6.35 × 2 | 6.35 × 2 | 6.35 x 3 | 6.35 x 3 | 6.35 x 4 | 6.35 × 4 | 6.35 × 5 |
| | | Gas | mm | 9.52 × 2 | 9.52 × 2 | 9.52 × 2 | 9.52 × 2 | 9.52 x 3 | 9.52 x 3 | 12.7×1+9.52×3 | 12.7×1+9.52×3 | 12.7×1+9.52×4 |
| | Total Piping Length (max) | | m | 20 | 30 | 30 | 30 | 50 | 60 | 60 | 70 | 80 |
| | Each Indoor Unit Piping Length (max) | | m | 15 | 20 | 20 | 20 | 25 | 25 | 25 | 25 | 25 |
| | Max. Height | | m | 10 | 15 (10)*3 | 15 (10)*3 | 15 (10)*3 | 15 (10)*3 | 15 (10)*3 | 15 (10)*3 | 15 (10)*3 | 15 (10)*3 |
| | Chargeless Length | | m | 20 | 20 | 20 | 20 | 40 | 40 | 40 | 25 | 0 |
| Guaranteed Operating Range [Outdoor] | | Cooling | ℃ | –10 ~ +46 | –10 ~ +46 | –10 ~ +46 | –10 ~ +46 | –10 ~ +46 | –10 ~ +46 | –10 ~ +46 | –10 ~ +46 | –10 ~ +46 |
| | | Heating | ℃ | –15 ~ +24 | –15 ~ +24 | –15 ~ +24 | –20 ~ +24 | –15 ~ +24 | –15 ~ +24 | –15 ~ +24 | –15 ~ +24 | –15 ~ +24 |

N: Please refer to the NOTE below.

| Type (Inverter Multi - Split Heat Pump) | | | | Up to 6 Indoor Units |
|---|---|---|---|---|
| Indoor Unit | | | | Please refer to (*5) |
| Outdoor Unit | | | | MXZ-6D122VA2 |
| Refrigerant | | | | R410A*1 |
| Power Supply | Source | | | Outdoor power supply |
| | Outdoor (V/Phase/Hz) | | | 220 - 230 - 240V / Single / 50 |
| Cooling | Capacity | Rated | kW | 12.2 |
| | | Min - Max | kW | 3.5 - 13.5 |
| | Input*5 | Rated | kW | 3.66 |
| | EER*6 | | | 3.33 |
| | | EEL Rank | | A |
| Heating | Capacity | Rated | kW | 14.0 |
| | | Min - Max | kW | 3.5 - 16.5 |
| | Input*5 | Rated | kW | 3.31 |
| | COP*6 | | | 4.23 |
| | | EEL Rank | | A |
| Operating Current (max)*5 | | | A | 26.8 |
| Outdoor Unit | Dimensions | H × W × D | mm | 1048-950-330 |
| | Weight | | kg | 88 |
| | Air Volume | Cooling | $m^3$/min | 63.0 |
| | | Heating | $m^3$/min | 77.0 |
| | Sound Level (SPL) | Cooling | dB(A) | 55 |
| | | Heating | dB(A) | 57 |
| | Sound Level (PWL) | Cooling | dB(A) | 70 |
| | Breaker Size | | A | 32 |
| Ext. Piping | Diameter | Liquid | mm | 6.35×6 |
| | | Gas | mm | 12.7×1+9.52×5 |
| | Total Piping Length (max) | | m | 80 |
| | Each Indoor Unit Piping Length (max) | | m | 25 |
| | Max. Height | | m | 15 (10)*3 |
| | Chargeless Length | | m | 30 |
| Guaranteed Operating Range [Outdoor] | | Cooling | ℃ | –10 ~ +46 |
| | | Heating | ℃ | –15 ~ +24 |

**NOTE**
When connecting the MFZ-KJ series indoor unit(s) to this outdoor unit, charge additional refrigerant according to the instructions in the diagram below.

**MXZ-2D33VA**

| No. of MFZ-KJ indoor units | Pipe length (L) ~20m | Maximum amount of refrigerant |
|---|---|---|
| 1 unit | 100g additional (Total 1250g) | 1250g |
| 2 units | Not available (Only one MFZ-KJ series indoor unit can be connected.) | |

**MXZ-2D42VA2 MXZ-2D53VA2 MXZ-2D53VAH2**

| No. of MFZ-KJ indoor units | Pipe length (L) ~20m | Pipe length (L) ~30m | Maximum amount of refrigerant |
|---|---|---|---|
| 1 unit | 100g additional (Total 1400g) | 100g+{(L-20)m×20g/m)} | 1600g |
| 2 units | 200g additional (Total 1500g) | 200g+{(L-20)m×20g/m)} | 1700g |

**MXZ-3E54VA**

| No. of MFZ-KJ indoor units | Pipe length (L) ~40m | Pipe length (L) ~50m | Maximum amount of refrigerant |
|---|---|---|---|
| 1 unit | 100g additional (Total 2800g) | 100g+{(L-40)m×20g/m)} | 3000g |
| 2 units | 200g additional (Total 2900g) | 200g+{(L-40)m×20g/m)} | 3100g |
| 3 units | 300g additional (Total 3000g) | 300g+{(L-40)m×20g/m)} | 3200g |

**MXZ-3E68VA MXZ-4E72VA**

| No. of MFZ-KJ indoor units | Pipe length (L) ~40m | Pipe length (L) ~60m | Maximum amount of refrigerant |
|---|---|---|---|
| 1 unit | 100g additional (Total 2800g) | 100g+{(L-40)m×20g/m)} | 3200g |
| 2 units | 200g additional (Total 2900g) | 200g+{(L-40)m×20g/m)} | 3300g |
| 3 units | 300g additional (Total 3000g) | 300g+{(L-40)m×20g/m)} | 3400g |

*1 Refrigerant leakage contributes to climate change. Refrigerant with lower global warming potential (GWP) would contribute less to global warming than a refrigerant with higher GWP, if leaked to the atmosphere. This appliance contains a refrigerant fluid with a GWP equal to 1975. This means that if 1 kg of this refrigerant fluid would be leaked to the atmosphere, the impact on global warming would be 1975 times higher than 1 kg of $CO_2$, over a period of 100 years. Never try to interfere with the refrigerant circuit yourself or disassemble the product yourself and always ask a professional.
*2 Energy consumption based on standard test results. Actual energy consumption will depend on how the appliance is used and where it is located.
*3 If the outdoor unit is installed higher than the indoor unit, max. height is reduced to 10m.
*4 EER/COP, EEL rank, SEER/SCOP values and energy efficiency class are measured when connected to the indoor units listed below.
MXZ-2D33VA → MSZ-SF15VA + MSZ-EF18VE
MXZ-2D42VA2 → MSZ-EF18VE + MSZ-EF25VE
MXZ-2D53VA(H)2 → MSZ-EF18VE + MSZ-EF35VE
MXZ-3E54VA → MSZ-EF18VE + MSZ-EF18VE + MSZ-EF18VE
MXZ-3E68VA → MSZ-EF18VE + MSZ-EF25VE + MSZ-EF25VE
MXZ-4E72VA → MSZ-EF18VE + MSZ-EF18VE + MSZ-EF18VE + MSZ-EF18VE
MXZ-4E83VA → MSZ-EF18VE + MSZ-EF18VE + MSZ-EF22VE + MSZ-EF25VE
MXZ-5E102VA → MSZ-EF18VE + MSZ-EF18VE + MSZ-EF22VE + MSZ-EF22VE + MSZ-EF22VE
*5 Power input and operating current (max) figures are for outdoor unit only
*6 EER/COP, EEL rank, values and energy efficiency class are measured when connected to the indoor units listed below.
MXZ-6D122VA2 → MSZ-EF18VE + MSZ-EF18VE + MSZ-EF18VE + MSZ-EF18VE + MSZ-EF25VE + MSZ-EF25VE

# MXZ-HA SERIES

Multi-port outdoor units exclusively for MSZ-HR indoor units.

R32

2-port

MXZ-2HA40VF
MXZ-2HA50VF

R32

3-port

MXZ-3HA50VF

## Stylish Design with Flat Panel Front

A stylish flat panel design is employed for the front of the indoor unit.
The simple look matches room aesthetics.

## Easy to create various combinations

Wide range of simple combinations only possible using multi-port outdoor units.

Two bedrooms

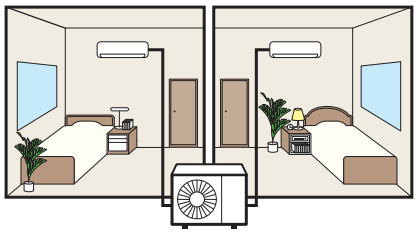

Three bedrooms

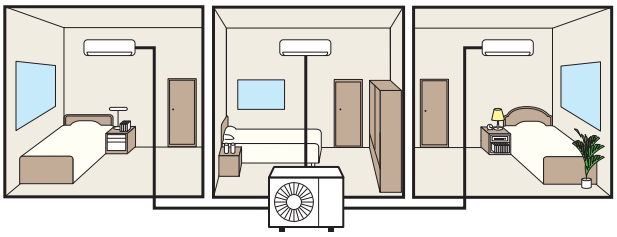

Living room and one bedroom

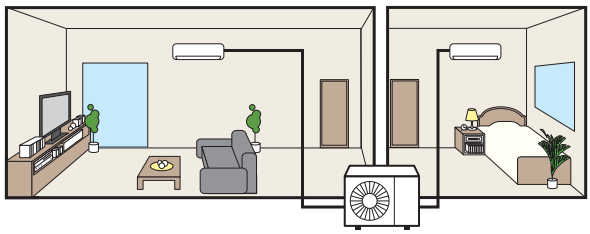

Wide living room

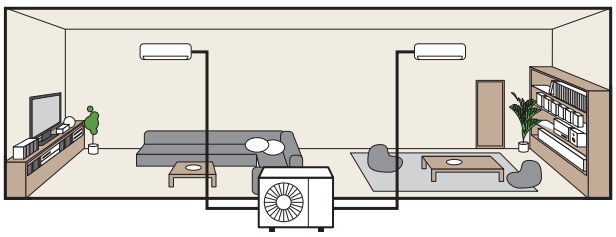

# MXZ-HA SERIES

INVERTER MULTI

| Type (Inverter Multi - Split Heat Pump) | | | | Up to 2 Indoor Units | | Up to 3 Indoor Units |
|---|---|---|---|---|---|---|
| Indoor Unit | | | | Please refer to (*4) | | |
| Outdoor Unit | | | | MXZ-2HA40VF | MXZ-2HA50VF | MXZ-3HA50VF |
| Refrigerant | | | | R32*1 | | |
| Power Supply | Source | | | Outdoor power supply | | |
| | Outdoor (V/Phase/Hz) | | | 220-230-240 / Single / 50 | | |
| Cooling | Capacity | Rated | kW | 4.0 | 5.0 | 5.0 |
| | Input*4 | Rated | kW | 1.05 | 1.52 | 1.26 |
| | EER*4 | | | 3.81 | 3.29 | 3.97 |
| | | EEL Rank*4 | | A | A | A |
| | Design Load | | kW | 4.0 | 5.0 | 5.0 |
| | Annual Electricity Consumption*2 | | kWh/a | 172 | 225 | 241 |
| | SEER*4 | | | 8.12 | 7.78 | 7.26 |
| | | Energy Efficiency Class*4 | | A++ | A++ | A++ |
| Heating (Average Season) | Capacity | Rated | kW | 4.3 | 6.0 | 6.0 |
| | Input | Rated | kW | 0.91 | 1.54 | 1.30 |
| | COP*4 | | | 4.73 | 3.90 | 4.62 |
| | | EEL Rank*4 | | A | A | A |
| | Design Load | | kW | 3.2 | 3.2 | 4.0 |
| | Declared Capacity | at reference design temperature | kW | 2.4 | 2.4 | 3.0 |
| | | at bivalent temperature | kW | 2.9 | 2.9 | 3.6 |
| | | at operation limit temperature | kW | 2.1 | 2.1 | 2.6 |
| | Back Up Heating Capacity | | kW | 0.8 | 0.8 | 1.0 |
| | Annual Electricity Consumption*2 | | kWh/a | 1043 | 1043 | 1394 |
| | SCOP*4 | | | 4.30 | 4.30 | 4.02 |
| | | Energy Efficiency Class*4 | | A+ | A+ | A+ |
| Operating Current (max) | | | A | 12.2 | 12.2 | 18.0 |
| Outdoor Unit | Dimensions | H × W × D | mm | 550 - 800 (+69) - 285 (+59.5) | 550 - 800 (+69) - 285 (+59.5) | 710 - 840 (+30) - 330 (+66) |
| | Weight | | kg | 37 | 37 | 57 |
| | Air Volume | Cooling | $m^3$/min | 28.4 | 32.7 | 31.0 |
| | | Heating | $m^3$/min | 33.5 | 34.7 | 29.1 |
| | Sound Level (SPL) | Cooling | dB(A) | 44 | 47 | 46 |
| | | Heating | dB(A) | 50 | 51 | 50 |
| | Sound Level (PWL) | Cooling | dB(A) | 59 | 64 | 61 |
| | Operating Current | Cooling | A | 4.9 | 6.8 | 5.6 |
| | | Heating | A | 4.6 | 6.9 | 5.8 |
| | Breaker Size | | A | 15 | 15 | 25 |
| Ext. Piping | Port Diameter | Liquid / Gas | mm | 6.35 × 2 / 9.52 × 2 | 6.35 × 2 / 9.52 × 2 | 6.35 × 3 / 9.52 × 3 |
| | Total Piping Length (max) | | m | 30 | 30 | 50 |
| | Each Indoor Unit Piping Length (max) | | m | 20 | 20 | 25 |
| | Max. Height | | m | 15 (10)*3 | 15 (10)*3 | 15 (10)*3 |
| | Chargeless Length | | m | 30 | 30 | 40 |
| Guaranteed Operating Range [Outdoor] | | Cooling | ℃ | –10 ~ +46 | | |
| | | Heating | ℃ | –15 ~ +24 | | |

*1 Refrigerant leakage contributes to climate change. Refrigerant with lower global warming potential (GWP) would contribute less to global warming than a refrigerant with higher GWP, if leaked to the atmosphere. This appliance contains a refrigerant fluid with a GWP equal to 550. This means that if 1 kg of this refrigerant fluid would be leaked to the atmosphere, the impact on global warming would be 550 times higher than 1 kg of $CO_2$, over a period of 100 years. Never try to interfere with the refrigerant circuit yourself or disassemble the product yourself and always ask a professional.
The GWP of R32 is 675 in the IPCC 4th Assessment Report

*2 Energy consumption based on standard test results.Actual energy consumption will depend on how the appliance is used and where it is located.

*3 If the outdoor unit is installed higher than the indoor unit, max hight is reduced to 10m.

*4 EER/COP, SEER/SCOP values and energy efficiency class are measured when connected to the indoor units listed below.
MXZ-2HA40VF MSZ-HR25VF + MSZ-HR25VF
MXZ-2HA50VF MSZ-HR25VF + MSZ-HR25VF
MXZ-3HA50VF MSZ-HR25VF + MSZ-HR25VF + MSZ-HR25VF

# PUMY-SP SERIES

Air conditioning system supports replacement work by simplifying the installation process. Ideal for supporting renewal needs at small offices and stores, home offices, etc.

R410A

PUMY-SP112/125/140VKM(-BS)
PUMY-SP112/125/140YKM(-BS)

EXAMPLE SYSTEM

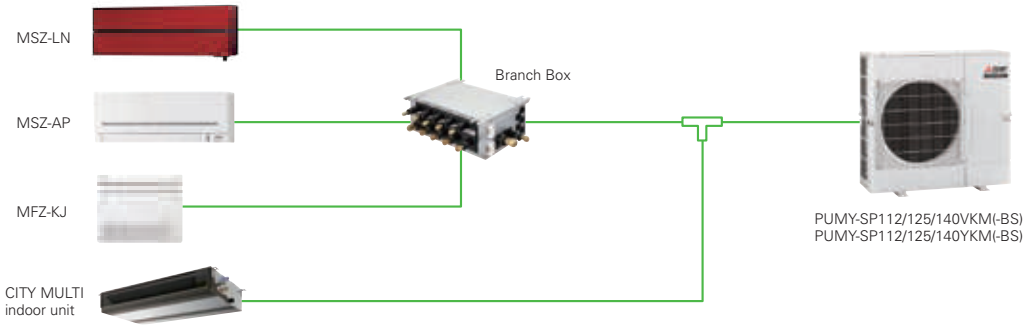


## Light weight and compact size

Compact design fits into narrow outdoor unit space of condominiums and offices.
Light weight design facilitates easy installation and transportation.

**PUMY-P112/125/140 YKM4(-BS)**

| | |
|---|---|
| Height | 1,338mm |
| Weight | 125kg |

**PUMY-SP112/125/140YKM(-BS)**

| | | |
|---|---|---|
| Height | 981mm | 27% reduction |
| Weight | 94kg | 25% reduction |

**Unobstructive, compact, and easy to hide from view**

Conventional 2-fan type outdoor units may spoil the view. Due to its compact size, the new outdoor fan unit can be installed in locations that would have been inappropriate.

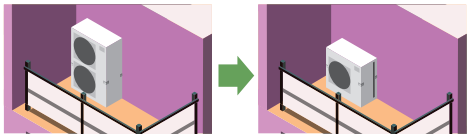

**Easy installation and transportation**

The reduced weight and height allow for better transportation performance. Carrying and installing become easier.

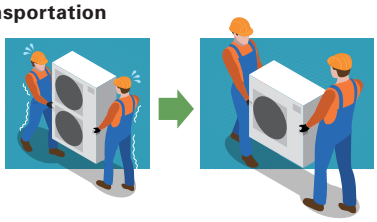

## Industry's top energy efficiency*

Even with its compact size and light weight, it has a high EER and COP. Costs are reduced with the industry's best energy saving abilities.

* As of sep.2017.Among VRF outdoor unit of 1fan.
(An incompany investigation)

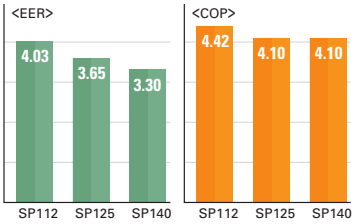


## Super silent mode*

Noise level can be reduced up to 10dB(A). This allows you to operate the unit even in the night in a residential zone.

*Capacity reduction differs by mode setting.
*PAC-SC36NA-E is required to activate Super Silent mode.

## An external static pressure of 30Pa

The installation location is flexible, thanks to its 30Pa static pressure. You can install it in locations that you could not before.

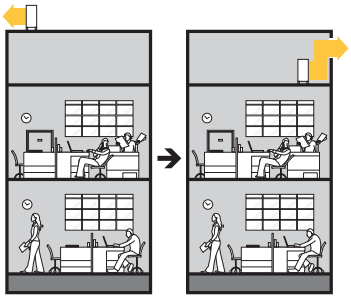

An external static pressure of 30Pa allows outdoor unit to be installed on balconies in high-rise building or spaces near louvers.

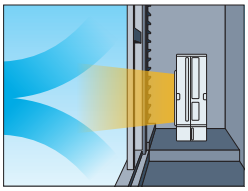

*Noise level will increase when using this function.

## Rear piping is available

**Freedom with layout due to its piping pullout locations in four directions**

The in-door unit allows piping from any four directions; front, back, bottom, or right. This enables easier horizontal connection for collective layout.
The out-door unit with an expanded piping layout flexibility greatly improves piping workability.

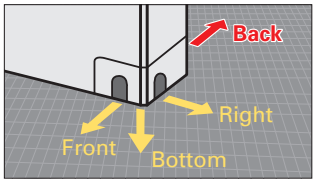

# PUMY-SP SERIES

INVERTER MULTI

| Model | | | | PUMY-SP112VKM(-BS) | PUMY-SP125VKM(-BS) | PUMY-SP140VKM(-BS) | PUMY-SP112YKM(-BS) | PUMY-SP125YKM(-BS) | PUMY-SP140YKM(-BS) |
|---|---|---|---|---|---|---|---|---|---|
| Power Source | | | | 1-phase 220 - 230 - 240V 50Hz / 220V 60Hz | | | 3-phase 380 - 400 - 415V 50Hz / 380V 60Hz | | |
| Cooling Capacity (nominal) | | *1 | kW | 12.5 | 14.0 | 15.5 | 12.5 | 14.0 | 15.5 |
| | Power Input | | kW | 3.10 | 3.84 | 4.70 | 3.10 | 3.84 | 4.70 |
| | Current Input | | A | 14.38 - 13.75 - 13.18 / 14.38 | 17.81 - 17.04 - 16.33 / 17.81 | 21.80 - 20.85 - 19.88 / 21.80 | 4.96 - 4.71 - 4.54 / 4.96 | 6.14 - 5.83 - 5.62 / 6.14 | 7.52 - 7.14 - 6.88 / 7.52 |
| | EER | | kW/kW | 4.03 | 3.65 | 3.30 | 4.03 | 3.65 | 3.30 |
| Temp. Range of Cooling*4 | Indoor Temp. | | W.B. | 15.0 - +24.0°C | 15.0 - +24.0°C | 15.0 - +24.0°C | 15.0 - +24.0°C | 15.0 - +24.0°C | 15.0 - +24.0°C |
| | Outdoor Temp. | *3 | D.B. | -5.0 - 52.0°C | -5.0 - 52.0°C | -5.0 - 52.0°C | -5.0 - 52.0°C | -5.0 - 52.0°C | -5.0 - 52.0°C |
| Heating Capacity (nominal) | | *2 | kW | 14.0 | 16.0 | 16.5 | 14.0 | 16.0 | 16.5 |
| | Power Input | | kW | 3.17 | 3.90 | 4.02 | 3.17 | 3.90 | 4.02 |
| | Current Input | | A | 14.70 - 14.06 - 13.48 / 14.70 | 18.09 - 17.30 - 16.58 / 18.09 | 18.65 - 17.83 - 17.09 / 18.65 | 5.07 - 4.82 - 4.64 / 5.07 | 6.24 - 5.93 - 5.71 / 6.24 | 6.43 - 6.11 - 5.89 / 6.43 |
| | COP | | kW/kW | 4.42 | 4.10 | 4.10 | 4.42 | 4.10 | 4.10 |
| Temp. Range of Heating | Indoor Temp. | | D.B. | 15.0 - 27.0°C | 15.0 - 27.0°C | 15.0 - 27.0°C | 15.0 - 27.0°C | 15.0 - 27.0°C | 15.0 - 27.0°C |
| | Outdoor Temp. | | W.B. | -20.0 - +15.0°C | -20.0 - +15.0°C | -20.0 - +15.0°C | -20.0 - +15.0°C | -20.0 - +15.0°C | -20.0 - +15.0°C |
| Indoor Unit Connectable | Total Capacity | | | 50 to 130% of outdoor unit capacity | | | | | |
| | Model / Quantity | | City Multi | 15 - 140 / 9 | 15 - 140 / 10 | 15 - 140 / 12 | 15 - 140 / 9 | 15 - 140 / 10 | 15 - 140 / 12 |
| | | | Branch Box*9 | 15 - 100 / 8 | 15 - 100 / 8 | 15 - 100 / 8 | 15 - 100 / 8 | 15 - 100 / 8 | 15 - 100 / 8 |
| | Mixed System | Branch Box 1 unit | City Multi | 15 - 140 / 5 | 15 - 140 / 5 | 15 - 140 / 5 | 15 - 140 / 5 | 15 - 140 / 5 | 15 - 140 / 5 |
| | | | Branch Box | 15 - 100 / 5 | 15 - 100 / 5 | 15 - 100 / 5 | 15 - 100 / 5 | 15 - 100 / 5 | 15 - 100 / 5 |
| | | Branch Box 2 units | City Multi | 15 - 140 / 3 or 2*7 | 15 - 140 / 3 | 15 - 140 / 3 | 15 - 140 / 3 or 2*7 | 15 - 140 / 3 | 15 - 140 / 3 |
| | | | Branch Box | 15 - 100 / 7 or 8*7 | 15 - 100 / 8 | 15 - 100 / 8 | 15 - 100 / 7 or 8*7 | 15 - 100 / 8 | 15 - 100 / 8 |
| Sound Pressure Level (Cooling / Heating) | | | dB <A> | 52 / 54 | 53 / 56 | 54 / 56 | 52 / 54 | 53 / 56 | 54 / 56 |
| Sound Power Level (Cooling) | | | dB <A> | 72 | 73 | 74 | 72 | 73 | 74 |
| Refrigerant Piping Diameter | Liquid Pipe | | mm | 9.52 Flare | | | | | |
| | Gas Pipe | | mm | 15.88 Flare | | | | | |
| Fan | Type × Quantity | | | Propeller Fan × 1 | | | | | |
| | Air Flow Rate | | m³/min | 77 | 83 | 83 | 77 | 83 | 83 |
| | | | L/s | 1,283 | 1,383 | 1,383 | 1,283 | 1,383 | 1,383 |
| | | | cfm | 2,719 | 2,931 | 2,931 | 2,719 | 2,931 | 2,931 |
| | Motor Output | | kW | 0.20 | | | | | |
| | External Static Press. | | Pa | 0 Pa / 30 Pa*8 | | | | | |
| Compressor | Type × Quantity | | | Twin rotary hermetic compressor × 1 | | | | | |
| | Starting Method | | | Inverter | | | | | |
| | Motor Output | | kW | 3.1 | 3.5 | 3.7 | 3.1 | 3.5 | 3.7 |
| External Dimensions (H × W × D) | | | mm | 981×1,050×330 (+40) | | | | | |
| Net Weight | | | kg (lbs) | 93 (205)*5 | | | 94 (207)*6 | | |
| Pre-Chareged Quantity | Weight | | kg | 3.5 | 3.5 | 3.5 | 3.5 | 3.5 | 3.5 |
| | $CO_2$ Equivalent | | t | 7.31 | 7.31 | 7.31 | 7.31 | 7.31 | 7.31 |
| Max Added Quantity | Weight | | kg | 9.0 | 9.0 | 9.0 | 9.0 | 9.0 | 9.0 |
| | $CO_2$ Equivalent | | t | 18.79 | 18.79 | 18.79 | 18.79 | 18.79 | 18.79 |

*1,*2 Nominal conditions

| | Indoor | Outdoor | Piping Length | Level Difference | External Static Press. (Outdoor Unit) |
|---|---|---|---|---|---|
| Cooling | 27°C DB / 19°C WB | 35°C | 7.5m (24 - 9 / 16ft.) | 0m (0ft) | 0 Pa |
| Heating | 20°C DB | 7°C DB / 6°C WB | 7.5m (24 - 9 / 16ft.) | 0m (0ft) | 0 Pa |

*3 10 to 52°C; incase of connecting PKFY-P15/P20/P25VBM, PFFY-P20/P25/P32VKM, PFFY-P20/P25/P32VLE(R)M indoor unit and M series indoor unit with connection kit and M series, S series, and P series type indoor unit with branch box.
*4 Up to 11 units when connecting via 2 branch boxes.
*5 94 (207), for PUMY-SP112/125/140VKM-BS
*6 95 (209), for PUMY-SP112/125/140YKM-BS
*7 When connecting 7 indoor units via branch box, connectable City Multi indoor units are 3; connecting 8 indoor units via branch box, connectable City Multi indoor units are 2.
*8 0 Pa as initial setting
*9 At least 2 indoor units must be connected when using branch box.

| Type | | | | Branch Box | | | |
|---|---|---|---|---|---|---|---|
| Model Name | | | | PAC-MK53BC | PAC-MK33BC | PAC-MK53BCB | PAC-MK33BCB |
| Connectable Number of Indoor Units | | | | Max. 5 | Max. 3 | Max. 5 | Max. 3 |
| Power Supply | Source | | | Outdoor power supply, Branch Box / Outdoor separate power supply | | | |
| | Outdoor (V/Phase/Hz) | | | 1-phase, 220 - 230 - 240V, 50Hz | | | |
| Total Input | | | kW | 0.003 | | | |
| Operating Current | | | A | 0.05 | | | |
| Dimensions | H × W × D | | mm | 170 - 450 - 280 | | | |
| Weight | | | kg | 7.4 | 6.7 | 7.0 | 6.5 |
| Piping [diameter] | Branch [Indoor Side] | Liquid | mm | 6.35 × 5 | 6.35 × 3 | 6.35 × 5 | 6.35 × 3 |
| | | Gas | mm | 9.52 × 4, 12.7 × 1 | 9.52 × 3 | 9.52 × 4, 12.7 × 1 | 9.52 × 3 |
| | Main [Outdoor Side] | Liquid | mm | 9.52 | | | |
| | | Gas | mm | 15.88 | | | |
| | Connection Method | | | Flared | | Brazed | |
| Wiring | to Indoor Unit | | | 3-wire + Earth wire | | | |
| | to Outdoor Unit | | | 3-wire + Earth wire | | | |

## <Branch box compatible table>

| Outdoor unit \ Branch box | PAC-MK31/51BC(B) | PAC-MK32/52BC(B) | PAC-MK33/53BC(B) |
|---|---|---|---|
| PUMY-SP112/125/140V/ YKM.TH(-BS) | ✓ | N/A | N/A |
| PUMY-SP112/125/140V/ YKMR1.TH(-BS) | N/A | N/A | ✓ |

## [SP112–140V/YKM(-BS)]

| Refrigerant Piping Lengths | Maximum meters |
|---|---|
| Total length | 120 |
| Maximum allowable length | To City Multi indoor unit: 70<br>Through Branch box: 80 |

| Vertical differentials between units | Maximum meters |
|---|---|
| Indoor/outdoor (outdoor higher) | 50 |
| Indoor/outdoor (outdoor lower) | 30 |
| Indoor/indoor | 15* |

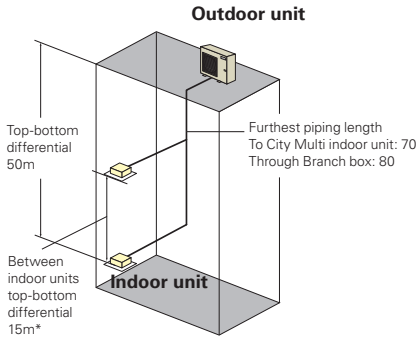


*In case of branch box connection: 12m

# PUMY-P SERIES

Air conditioning system supports replacement work by simplifying the installation process. Ideal for supporting renewal needs at small offices and stores, home offices, etc.

R410A

PUMY-P112/125/140VKM4(-BS)
PUMY-P112/125/140YKM(E)4(-BS)
PUMY-P200YKM2(-BS)

## EXAMPLE SYSTEM

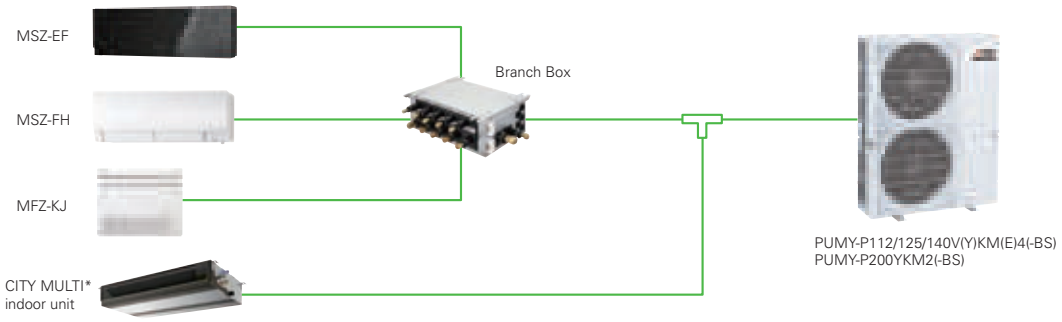


*In case of mix sytstem (CITY MULTI indoor unit with Branch box), PKFY and PFFY series are not connectable. (P112/125/140)

## The two-pipe zoned system designed for Heat Pump Operation

PUMY series make use of a two-pipe refrigerant system, which allows for system changeover from cooling to heating, ensuring that a constant indoor climate is maintained in all zones. The compact outdoor unit utilizes R410A refrigerant and an INVERTER-driven compressor to use energy effectively.
With a wide range of indoor unit line-up in connection with a flexible piping system, PUMY series can be configured for all applications. Up to 12 indoor units can be connected with up to 130% connected capacity to maximize engineer's design options. This feature allows easy air conditioning in each area with convenient individual controllers.

**Small Offices**

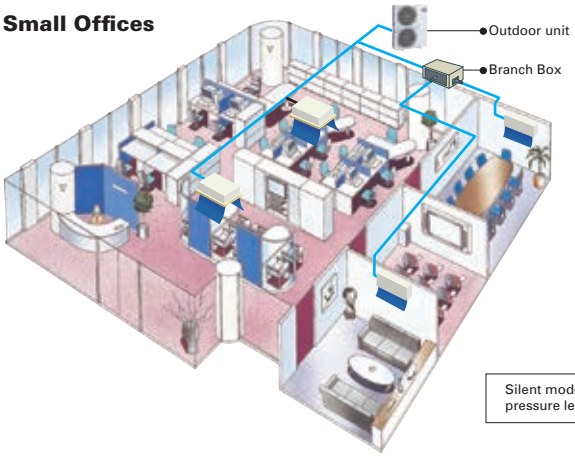


**Residence**

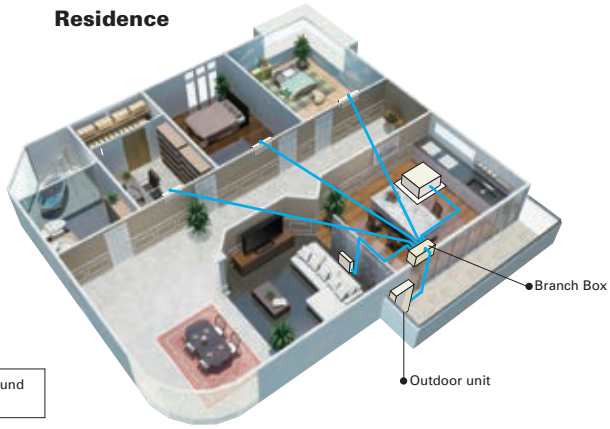


Silent mode can reduce sound pressure level by 3dB(A)

| | | | Maximum Meters | | | |
|---|---|---|---|---|---|---|
| | | | Only City Multi*1 Indoor Unit | Only Branch Box Connection | Mixed System (City Multi*1 Indoor Unit + Branch Box) | |
| | | | | | City Multi*1 Indoor Unit | Via Branch Box |
| P112/125/140 | Refrigerant Piping Length | Total Length | 300 | 150 | 240 (2 Branch boxes) / 300 (1 Branch box) | |
| | | Maximum Allowable Length | 150 (175 equivalent) | 80 | 85 (95 equivalent) | 80 |
| | | Farthest Indoor From First Branch | 30 | 55 | 30 | 55 |
| | Vertical Differentials Between Units | Indoor/Outdoor (Outdoor higher) | 50 | 50 | 50 | |
| | | Indoor/Outdoor(Outdoor Lower) | 40*2 | 40 | 40 | |
| | | Indoor/Indoor | 15*3 | 15*3 | 15*3 | |
| P200 | Refrigerant Piping Length | Total Length | 150 | 150 | 150 | |
| | | Maximum Allowable Length | 80 (90 equivalent) | 80 | 80 (90 equivalent) | 80 |
| | | Farthest Indoor From First Branch | 30 | 55 | 30 | 55 |
| | Vertical Differentials Between Units | Indoor/Outdoor (Outdoor higher) | 50 | 50 | 50 | |
| | | Indoor/Outdoor (Outdoor Lower) | 40 | 40 | 40 | |
| | | Indoor/Indoor | 15*3 | 15*3 | 15*3 | |

*1 Include system with connection kit
*2 In case of including PKFY or PFFY, height between units is 30m.
*3 In case of branch box connection: 12m

## 30Pa external static pressure* Option (requires PAC-SJ71FM-E)

An external static pressure of 30Pa enables the outdoor unit to be installed on balconies in high-rise building or spaces near louvers.

✻PUMY-P112/125/140VKM4(-BS), PUMY-P112/125/140YKM(E)4(-BS) only.
✻Noise level will increase when using this function.

30Pa external static pressure fan motor (option)
(PAC-SJ71FM-E)

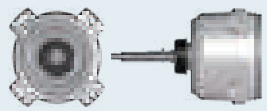

# PUMY SERIES
INVERTER MULTI

| Model | | | | PUMY-P112VKM4(-BS) | PUMY-P125VKM4(-BS) | PUMY-P140VKM4(-BS) | PUMY-P112YKM4(-BS) | PUMY-P125YKM4(-BS) | PUMY-P140YKM4(-BS) | PUMY-P200YKM2(-BS) |
|---|---|---|---|---|---|---|---|---|---|---|
| Power Source | | | | 1-phase 220 - 230 - 240V 50Hz | | | 3-phase 380 - 400 - 415V 50Hz | | | |
| Cooling Capacity (nominal) | | *1 | kW | 12.5 | 14.0 | 15.5 | 12.5 | 14.0 | 15.5 | 22.4 |
| | Power Input | | kW | 2.79 | 3.46 | 4.52 | 2.79 | 3.46 | 4.52 | 6.05 |
| | Current Input | | A | 12.87 - 12.32 - 11.80 | 15.97 - 15.27 - 14.64 | 20.86 - 19.95 - 19.12 | 4.99 - 4.74 - 4.57 | 5.84 - 5.55 - 5.35 | 7.23 - 6.87 - 6.62 | 9.88 - 9.39 - 9.05 |
| | EER | | kW/kW | 4.48 | 4.05 | 3.43 | 4.48 | 4.05 | 3.43 | 3.70 |
| Temp. Range of Cooling | Indoor Temp. | | W.B. | 15.0 - 24.0°C | 15.0 - 24.0°C | 15.0 - 24.0°C | 15.0 - 24.0°C | 15.0 - 24.0°C | 15.0 - 24.0°C | 15.0 - 24.0°C |
| | Outdoor Temp.*3 | | D.B. | -5.0 - 52.0°C | -5.0 - 52.0°C | -5.0 - 52.0°C | -5.0 - 52.0°C | -5.0 - 52.0°C | -5.0 - 52.0°C | -5.0 - 52.0°C |
| Heating Capacity (nominal) | | *2 | kW | 14.0 | 16.0 | 18.0 | 14.0 | 16.0 | 18.0 | 25.0 |
| | Power Input | | kW | 3.04 | 3.74 | 4.47 | 3.04 | 3.74 | 4.47 | 5.84 |
| | Current Input | | A | 14.03 - 13.42 - 12.86 | 17.26 - 16.51 - 15.82 | 20.63 - 19.73 - 18.91 | 5.43 - 5.16 - 4.98 | 6.31 - 6.00 - 5.78 | 7.15 - 6.79 - 6.55 | 9.54 - 9.06 - 8.74 |
| | COP | | kW/kW | 4.61 | 4.28 | 4.03 | 4.61 | 4.28 | 4.03 | 4.28 |
| Temp. Range of Heating | Indoor Temp. | | D.B. | 15.0 - 27.0°C | 15.0 - 27.0°C | 15.0 - 27.0°C | 15.0 - 27.0°C | 15.0 - 27.0°C | 15.0 - 27.0°C | 15.0 - 27.0°C |
| | Outdoor Temp. | | W.B. | -20.0 - 15.0°C | -20.0 - 15.0°C | -20.0 - 15.0°C | -20.0 - 15.0°C | -20.0 - 15.0°C | -20.0 - 15.0°C | -20.0 - 15.0°C |
| Indoor Unit Connectable | Total Capacity | | | 50 to 130% of outdoor unit capacity | | | | | | |
| | Model / Quantity | | City Multi | 15 - 140 / 9 | 15 - 140 / 10 | 15 - 140 / 12 | 15 - 140 / 9 | 15 - 140 / 10 | 15 - 140 / 12 | 15 - 200 / 12 |
| | | | Branch Box*5 | 15 - 100 / 8 | 15 - 100 / 8 | 15 - 100 / 8 | 15 - 100 / 8 | 15 - 100 / 8 | 15 - 100 / 8 | 15 - 100 / 8 |
| | | Mixed System: Branch Box 1 unit | City Multi | 15 - 140 / 5 | 15 - 140 / 5 | 15 - 140 / 5 | 15 - 140 / 5 | 15 - 140 / 5 | 15 - 140 / 5 | 15 - 200 / 5 |
| | | | Branch Box | 15 - 100 / 5 | 15 - 100 / 5 | 15 - 100 / 5 | 15 - 100 / 5 | 15 - 100 / 5 | 15 - 100 / 5 | 15 - 100 / 5 |
| | | Mixed System: Branch Box 2 units | City Multi | 15 - 140 / 3 or 2*4 | 15 - 140 / 3 | 15 - 140 / 3 | 15 - 140 / 3 or 2*4 | 15 - 140 / 3 | 15 - 140 / 3 | 15 - 200 / 3 |
| | | | Branch Box | 15 - 100 / 7 or 8*4 | 15 - 100 / 8 | 15 - 100 / 8 | 15 - 100 / 7 or 8*4 | 15 - 100 / 8 | 15 - 100 / 8 | 15 - 100 / 8 |
| Sound Pressure Level (measured in anechoic room) | | | dB <A> | 49 / 51 | 50 / 52 | 51 / 53 | 49 / 51 | 50 / 52 | 51 / 53 | 56 / 61 |
| Refrigerant Piping Diameter | Liquid Pipe | | mm | 9.52 Flare | | | | | | 9.52*6 Flare |
| | Gas Pipe | | mm | 15.88 Flare | | | | | | 19.1 Flare |
| Fan | Type × Quantity | | | Propeller Fan × 2 | | | | | | |
| | Air Flow Rate | | m³/min | 110 | | | | | | 139 |
| | | | L/s | 1,883 | | | | | | 2,316 |
| | | | cfm | 3,884 | | | | | | 4,908 |
| | Motor Output | | kW | 0.074 + 0.074 | | | | | | 0.20 + 0.20 |
| Compressor | Type × Quantity | | | Scroll hermetic compressor × 1 | | | | | | |
| | Starting Method | | | Inverter | | | | | | |
| | Motor Output | | kW | 2.9 | 3.5 | 3.9 | 2.9 | 3.5 | 3.9 | 5.3 |
| External Dimensions (H × W × D) | | | mm | 1,338×1,050×330 (+40) | | | | | | |
| Weight | | | kg | 122 | | | 125 | | | 141 |

*1,*2 Nominal conditions

| | Indoor | Outdoor | Piping Length | Level Difference |
|---|---|---|---|---|
| Cooling | 27°C DB / 19°C WB | 35°C | 7.5m | 0m |
| Heating | 20°C DB | 7°C DB / 6°C WB | 7.5m | 0m |

*3 10 to 52°C D.B.: When connecting PKFY-P15/20/25VBM, PFFY-P20/25/32VKM and PFFY-P20/25/32VLE(R)M, PEFY-P-VMA3, M, S and P series indoor unit.
*4 When connecting 7 indoor units via branch box, connectable City Multi indoor units are 3; connecting 8 indoor units via branch box, connectable indoor units are 2.
*5 At least 2 indoor units must be connected when using branch box.
*6 Liquid pipe diameter: 12.7mm when piping length is more than 60m.

| Model | | | | PUMY-P112YKME4(-BS) | PUMY-P125YKME4(-BS) | PUMY-P140YKME4(-BS) |
|---|---|---|---|---|---|---|
| Power Source | | | | 3-phase 380 - 400 - 415V 50Hz | | |
| Cooling Capacity (nominal) | | *1 | kW | 12.5 | 14.0 | 15.5 |
| | Power Input | | kW | 2.79 | 3.46 | 4.52 |
| | Current Input | | A | 4.99 / 4.74 / 4.57 | 5.84 / 5.55 / 5.35 | 7.23 / 6.87 / 6.62 |
| | EER | | kW/kW | 4.48 | 4.05 | 3.43 |
| Temp. Range of Cooling | Indoor Temp. | | W.B. | 15 to 24°C | | |
| | Outdoor Temp.*3 | | D.B. | –5 to 52°C | | |
| Heating Capacity (nominal) | | *2 | kW | 14.0 | 16.0 | 18.0 |
| | Power Input | | kW | 3.04 | 3.74 | 4.47 |
| | Current Input | | A | 5.43 / 5.16 / 4.98 | 6.31 / 6.00 / 5.78 | 7.15 / 6.79 / 6.55 |
| | COP | | kW/kW | 4.61 | 4.28 | 4.03 |
| Temp. Range of Heating | Indoor Temp. | | D.B. | 15 to 27°C | | |
| | Outdoor Temp. | | W.B. | –20 to 15°C | | |
| Indoor Unit Connectable | Total Capacity | | | 50 to 130% of outdoor unit capacity | | |
| | Model / Quantity | | City Multi | 15 - 140 / 9 | 15 - 140 / 10 | 15 - 140 / 12 |
| | | | Branch Box*5 | 15 - 100 / 8 | 15 - 100 / 8 | 15 - 100 / 8 |
| | | Mixed System: Branch Box 1 unit | City Multi | 15 - 140 / 5 | 15 - 140 / 5 | 15 - 140 / 5 |
| | | | Branch Box | 15 - 100 / 5 | 15 - 100 / 5 | 15 - 100 / 5 |
| | | Mixed System: Branch Box 2 units | City Multi | 15 - 140 / 3 or 2*4 | 15 - 140 / 3 | 15 - 140 / 3 |
| | | | Branch Box | 15 - 100 / 7 or 8*4 | 15 - 100 / 8 | 15 - 100 / 8 |
| Sound Pressure Level (measured in anechoic room) | | | dB <A> | 49 / 51 | 50 / 52 | 51 / 53 |
| Refrigerant Piping Diameter | Liquid Pipe | | mm | 9.52 Flare | | |
| | Gas Pipe | | mm | 15.88 Flare | | |
| Fan | Type × Quantity | | | Propeller Fan × 2 | | |
| | Air Flow Rate | | m³/min | 110 | | |
| | | | L/s | 1,833 | | |
| | | | cfm | 3,884 | | |
| | Motor Output | | kW | 0.074 + 0.074 | | |
| Compressor | Type × Quantity | | | Scroll hermetic compressor × 1 | | |
| | Starting Method | | | Inverter | | |
| | Motor Output | | kW | 2.9 | 3.5 | 3.9 |
| External Dimensions (H × W × D) | | | mm | 1,338×1,050×330 (+40) | | |
| Weight | | | kg | 136 | | |

*1,*2 Nominal conditions

| | Indoor | Outdoor | Piping Length | Level Difference |
|---|---|---|---|---|
| Cooling | 27°C DB / 19°C WB | 35°C | 7.5m | 0m |
| Heating | 20°C DB | 7°C DB / 6°C WB | 7.5m | 0m |

*3 10 to 52°C D.B.: When connecting PKFY-P15/20/25VBM, PFFY-P20/25/32VKM and PFFY-P20/25/32VLE(R)M, PEFY-P-VMA3, M, S and P series indoor unit.
*4 When connecting 7 indoor units via branch box, connectable City Multi indoor units are 3; connecting 8 indoor units via branch box, connectable indoor units are 2.
*5 At least 2 indoor units must be connected when using branch box.

| Type | | | | Branch Box | | | |
|---|---|---|---|---|---|---|---|
| Model Name | | | | PAC-MK53BC | PAC-MK33BC | PAC-MK53BCB | PAC-MK33BCB |
| Connectable Number of Indoor Units | | | | Max. 5 | Max. 3 | Max. 5 | Max. 3 |
| Power Supply | Source | | | Outdoor power supply, Branch Box / Outdoor separate power supply | | | |
| | Outdoor (V/Phase/Hz) | | | 1-phase, 220/230/240V, 50Hz, 1-phase, 220V, 60Hz | | | |
| Total Input | | | kW | 0.003 | | | |
| Operating Current | | | A | 0.05 | | | |
| Dimensions | H × W × D | | mm | 170 - 450 - 280 | | | |
| Weight | | | kg | 7.4 | 6.7 | 7.0 | 6.5 |
| Piping [diameter] | Branch [Indoor Side] | Liquid | mm | 6.35 × 5 | 6.35 × 3 | 6.35 × 5 | 6.35 × 3 |
| | | Gas | mm | 9.52 × 4, 12.7 × 1 | 9.52 × 3 | 9.52 × 4, 12.7 × 1 | 9.52 × 3 |
| | Main [Outdoor Side] | Liquid | mm | 9.52 | | | |
| | | Gas | mm | 15.88 | | | |
| | Connection Method | | | Flared | | Brazed | |
| Wiring | to Indoor Unit | | | 3-wire + Earth wire | | | |
| | to Outdoor Unit | | | 3-wire + Earth wire | | | |

# Indoor Unit Compatibility Table

## ■ MXZ Series R32

Possible combinations of outdoor units and indoor units are shown below.

| Indoor Unit | | | Outdoor Unit: Inverter Models Heat pump type | | | | | | | | | |
|---|---|---|---|---|---|---|---|---|---|---|---|---|
| | | | MXZ-2F33VF3*3 | MXZ-2F42VF3*3 | MXZ-2F53VF(H)3*3 | MXZ-3F54VF3*3 | MXZ-3F68VF3*3 | MXZ-4F72VF3*3 | MXZ-4F80VF3*3 | MXZ-2HA40VF*3 | MXZ-2HA50VF*3 | MXZ-3HA50VF*3 |
| M series | Wall-Mounted | MSZ-LN18VG(W)(V)(R)(B) | | | | ● | ● | ● | ● | | | |
| | | MSZ-LN25VG(W)(V)(R)(B) | | | | ● | ● | ● | ● | | | |
| | | MSZ-LN35VG(W)(V)(R)(B) | | | | ● | ● | ● | ● | | | |
| | | MSZ-LN50VG(W)(V)(R)(B) | | | | | | | | | | |
| | | MSZ-LN18VG2(W)(V)(R)(B) | ● | ● | ● | ● | ● | ● | ● | | | |
| | | MSZ-LN25VG2(W)(V)(R)(B) | ● | ● | ● | ● | ● | ● | ● | | | |
| | | MSZ-LN35VG2(W)(V)(R)(B) | | ● | ● | ● | ● | ● | ● | | | |
| | | MSZ-LN50VG2(W)(V)(R)(B) | | | | ● | ● | ● | ● | | | |
| | | MSZ-AP15VG | ● | ● | ● | ● | ● | ● | ● | | | |
| | | MSZ-AP20VG | ● | ● | ● | ● | ● | ● | ● | | | |
| | | MSZ-AP25VG | ● | ● | ● | ● | ● | ● | ● | | | |
| | | MSZ-AP35VG | | ● | ● | ● | ● | ● | ● | | | |
| | | MSZ-AP42VG | | | ● | ● | ● | ● | ● | | | |
| | | MSZ-AP50VG | | | ● | ● | ● | ● | ● | | | |
| | | MSZ-AP60VG | | | | | ● | ● | ● | | | |
| | | MSZ-EF18VG(W)(B)(S) | ● | ● | ● | ● | ● | ● | ● | | | |
| | | MSZ-EF22VG(W)(B)(S) | ● | ● | ● | ● | ● | ● | ● | | | |
| | | MSZ-EF25VG(W)(B)(S) | ● | ● | ● | ● | ● | ● | ● | | | |
| | | MSZ-EF35VG(W)(B)(S) | | ● | ● | ● | ● | ● | ● | | | |
| | | MSZ-EF42VG(W)(B)(S) | | | ● | ● | ● | ● | ● | | | |
| | | MSZ-EF50VG(W)(B)(S) | | | ● | ● | ● | ● | ● | | | |
| | | MSZ-BT20VG | ● | ● | ● | ● | ● | ● | ● | | | |
| | | MSZ-BT25VG | ● | ● | ● | ● | ● | ● | ● | | | |
| | | MSZ-BT35VG | | ● | ● | ● | ● | ● | ● | | | |
| | | MSZ-BT50VG | | | | | | | | | | |
| | | MSZ-HR25VF | | | | | | | | ● | ● | ● |
| | | MSZ-HR35VF | | | | | | | | ● | ● | ● |
| | | MSZ-HR42VF | | | | | | | | | ● | ● |
| | | MSZ-HR50VF | | | | | | | | | | ● |
| | Floor-Standing | MFZ-KT25VG | ● | ● | ● | ● | ● | ● | ● | | | |
| | | MFZ-KT35VG | | ● | ● | ● | ● | ● | ● | | | |
| | | MFZ-KT50VG | | | | ● | ● | ● | ● | | | |
| | 1-way Cassette | MLZ-KP25VF | ● | ● | ● | ● | ● | ● | ● | | | |
| | | MLZ-KP35VF | | ● | ● | ● | ● | ● | ● | | | |
| | | MLZ-KP50VF | | | | ● | ● | ● | ● | | | |
| S series | 2×2 Cassette | SLZ-M15FA | ● | ● | ● | ● | ● | ● | ● | | | |
| | | SLZ-M25FA | ● | ● | ● | ● | ● | ● | ● | | | |
| | | SLZ-M35FA | | ● | ● | ● | ● | ● | ● | | | |
| | | SLZ-M50FA | | | | ● | ● | ● | ● | | | |
| | Ceiling-Concealed | SEZ-M25DA*2 | ● | ● | ● | ● | ● | ● | ● | | | |
| | | SEZ-M25DAL*2 | ● | ● | ● | ● | ● | ● | ● | | | |
| | | SEZ-M35DA | | ● | ● | ● | ● | ● | ● | | | |
| | | SEZ-M35DAL | | ● | ● | ● | ● | ● | ● | | | |
| | | SEZ-M50DA | | | | ● | ● | ● | ● | | | |
| | | SEZ-M50DAL | | | | ● | ● | ● | ● | | | |
| | | SEZ-M60DA | | | | | ● | ● | ● | | | |
| | | SEZ-M60DAL | | | | | ● | ● | ● | | | |
| | | SEZ-M71DA | | | | | | | | | | |
| | | SEZ-M71DAL | | | | | | | | | | |
| P series | Ceiling-Suspended | PCA-M50KA | | | | ● | ● | ● | ● | | | |
| | | PCA-M60KA | | | | | ● | ● | ● | | | |
| | | PCA-M71KA | | | | | | | | | | |
| | Ceiling-Concealed | PEAD-M50JA | | | | ●*1 | ●*1 | ●*1 | ● | | | |
| | | PEAD-M50JAL | | | | ●*1 | ●*1 | ●*1 | ● | | | |
| | | PEAD-M60JA | | | | | | | | | | |
| | | PEAD-M60JAL | | | | | | | | | | |
| | | PEAD-M71JA | | | | | | | | | | |
| | | PEAD-M71JAL | | | | | | | | | | |

*1 Maximum total current of indoor units: 3A or less.
*2 SEZ-M25 cannot be connected with MXZ-2F/3F/4F when total capacity of connected indoor units is equivalent to outdoor capacity (capacity ratio is 1).
*3 MXZ outdoor units are not designed to operate with a single indoor unit with one-to-one piping work. Please install at least two indoor units.

## ■ MXZ Series R410A

Possible combinations of outdoor units and indoor units are shown below.

| Indoor Unit | | Outdoor Unit | Inverter Models Heat pump type | | | | | | | | | | | | |
|---|---|---|---|---|---|---|---|---|---|---|---|---|---|---|---|
| | | | MXZ-*3 2D33VA | MXZ-*3 2D42VA2 | MXZ-*3 2D53VA(H)2 | MXZ-*3 2E53VAHZ | MXZ-*3 3E54VA | MXZ-*3 3E68VA | MXZ-*3 4E72VA | MXZ-*3 4E83VA | MXZ-*3 4E83VAHZ | MXZ-*3 5E102VA | MXZ-*3 6D122VA2 | MXZ-*3 2DM40VA | MXZ-*3 3DM50VA |
| M series | Wall-Mounted | MSZ-LN18VG(W)(V)(R)(B) | | | | | | | | | | | | | |
| | | MSZ-LN25VG(W)(V)(R)(B) | ● | ● | ● | ● | ● | ● | ● | ● | ● | ● | ● | | |
| | | MSZ-LN35VG(W)(V)(R)(B) | | ● | ● | ● | ● | ● | ● | ● | ● | ● | ● | | |
| | | MSZ-LN50VG(W)(V)(R)(B) | | | | | | | | | | | | | |
| | | MSZ-AP15VG | ● | ● | ● | ● | ● | ● | ● | ● | ● | ● | ● | | |
| | | MSZ-AP20VG | ● | ● | ● | ● | ● | ● | ● | ● | ● | ● | ● | | |
| | | MSZ-AP25VG*7 | ● | ● | ● | ● | ● | ● | ● | ● | ● | ● | ● | | |
| | | MSZ-AP35VG*7 | | ● | ● | ● | ● | ● | ● | ● | ● | ● | ● | | |
| | | MSZ-AP42VG*7 | | | ● | ● | ● | ● | ● | ● | ● | ● | ● | | |
| | | MSZ-AP50VG*7 | | | ● | ● | ● | ● | ● | ● | ● | ● | ● | | |
| | | MSZ-FH25VE2 | ● | ● | ● | ● | ● | ● | ● | ● | ● | ● | ● | | |
| | | MSZ-FH35VE2 | | ● | ● | ● | ● | ● | ● | ● | ● | ● | ● | | |
| | | MSZ-FH50VE2 | | | | | ● | ● | ● | ● | ● | ● | ● | | |
| | | MSZ-EF18VG(W)(B)(S) | ● | ● | ● | ● | ● | ● | ● | ● | ● | ● | ● | | |
| | | MSZ-EF22VG(W)(B)(S) | ● | ● | ● | ● | ● | ● | ● | ● | ● | ● | ● | | |
| | | MSZ-EF25VG(W)(B)(S) | ● | ● | ● | ● | ● | ● | ● | ● | ● | ● | ● | | |
| | | MSZ-EF35VG(W)(B)(S) | | ● | ● | ● | ● | ● | ● | ● | ● | ● | ● | | |
| | | MSZ-EF42VG(W)(B)(S) | | | ● | ● | ● | ● | ● | ● | ● | ● | ● | | |
| | | MSZ-EF50VG(W)(B)(S) | | | ● | ● | ● | ● | ● | ● | ● | ● | ● | | |
| | | MSZ-SF15VA | ● | ● | ● | ● | ● | ● | ● | ● | ● | ● | ● | | |
| | | MSZ-SF20VA | ● | ● | ● | ● | ● | ● | ● | ● | ● | ● | ● | | |
| | | MSZ-SF25VE3 | ● | ● | ● | ● | ● | ● | ● | ● | ● | ● | ● | | |
| | | MSZ-SF35VE3 | | ● | ● | ● | ● | ● | ● | ● | ● | ● | ● | | |
| | | MSZ-SF42VE3 | | | ● | ● | ● | ● | ● | ● | ● | ● | ● | | |
| | | MSZ-SF50VE3 | | | ● | ● | ● | ● | ● | ● | ● | ● | ● | | |
| | | MSZ-GF60VE2 | | | | | | ● | ● | ● | ● | ● | ● | | |
| | | MSZ-GF71VE2 | | | | | | | | ● | ● | ● | ● | | |
| | | MSZ-DM25VA | | | | | | | | | | | | ● | ● |
| | | MSZ-DM35VA | | | | | | | | | | | | ● | ● |
| | | MSZ-HJ25VA | | | | | | | | | | | | ● | ● |
| | | MSZ-HJ35VA | | | | | | | | | | | | ● | ● |
| | | MSZ-HJ50VA | | | | | | | | | | | | | ● |
| | Floor-Standing | MFZ-KJ25VE2 | ●*4*5 | ●*4 | ●*4 | ● | ●*4 | ●*4 | ● | ● | ● | ● | ● | | |
| | | MFZ-KJ35VE2 | | ●*4 | ●*4 | ● | ●*4 | ●*4 | ● | ● | ● | ● | ● | | |
| | | MFZ-KJ50VE2 | | | | | ●*4 | ●*4 | ● | ● | ● | ● | ● | | |
| | 1-way Cassette | MLZ-KP25VF | ● | ● | ● | ● | ● | ● | ● | ● | ● | ● | ● | | |
| | | MLZ-KP35VF | | ● | ● | ● | ● | ● | ● | ● | ● | ● | ● | | |
| | | MLZ-KP50VF | | | | | ● | ● | ● | ● | ● | ● | ● | | |
| S series | 2×2 Cassette | SLZ-M15FA | | | | | | | | | | | | | |
| | | SLZ-M25FA | ● | ● | ● | ● | ● | ● | ● | ● | ● | ● | ● | | |
| | | SLZ-M35FA | | ● | ● | ● | ● | ● | ● | ● | ● | ● | ● | | |
| | | SLZ-M50FA | | | | | ● | ● | ● | ● | ● | ● | ● | | |
| | Ceiling-Concealed | SEZ-M25DA*2 | ● | ● | ● | ● | ● | ● | ● | ● | ● | ● | ● | | |
| | | SEZ-M25DAL*2 | ● | ● | ● | ● | ● | ● | ● | ● | ● | ● | ● | | |
| | | SEZ-M35DA | | ● | ● | ● | ● | ● | ● | ● | ● | ● | ● | | |
| | | SEZ-M35DAL | | ● | ● | ● | ● | ● | ● | ● | ● | ● | ● | | |
| | | SEZ-M50DA | | | | | ● | ● | ● | ● | ● | ● | ● | | |
| | | SEZ-M50DAL | | | | | ● | ● | ● | ● | ● | ● | ● | | |
| | | SEZ-M60DA | | | | | | ● | ● | ● | ● | ● | ● | | |
| | | SEZ-M60DAL | | | | | | ● | ● | ● | ● | ● | ● | | |
| | | SEZ-M71DA | | | | | | | | ● | ● | ● | ● | | |
| | | SEZ-M71DAL | | | | | | | | ● | ● | ● | ● | | |
| P series | 4-way Cassette | PLA-M50EA | | | | | ● | ● | ● | ● | ● | ● | ● | | |
| | | PLA-M60EA | | | | | | ● | ● | ● | ●*6 | ● | ● | | |
| | | PLA-M71EA | | | | | | | | ● | ●*6 | ● | ● | | |
| | Ceiling-Suspended | PCA-M50KA | | | | | ● | ● | ● | ● | ●*6 | ● | ● | | |
| | | PCA-M60KA | | | | | | ● | ● | ● | ●*6 | ● | ● | | |
| | | PCA-M71KA | | | | | | | | ● | ●*6 | ● | ● | | |
| | Ceiling-Concealed | PEAD-M50JA | | | | | ●*1 | ●*1 | ●*1 | ●*1 | ●*1*6 | ●*1 | ●*1 | | |
| | | PEAD-M50JAL | | | | | ●*1 | ●*1 | ●*1 | ●*1 | ●*1*6 | ●*1 | ●*1 | | |
| | | PEAD-M60JA | | | | | | | | ●*1 | ●*1*6 | ●*1 | ●*1 | | |
| | | PEAD-M60JAL | | | | | | | | ●*1 | ●*1*6 | ●*1 | ●*1 | | |
| | | PEAD-M71JA | | | | | | | | ●*1 | ●*1*6 | ●*1 | ●*1 | | |
| | | PEAD-M71JAL | | | | | | | | ●*1 | ●*1*6 | ●*1 | ●*1 | | |

*1 Maximum total current of indoor units: 3A or less.
*2 SEZ-KD25 cannot be connected with MXZ-2D(E)/3E/4E/5E when total capacity of connected indoor units is equivalent to outdoor capacity (capacity ratio is 1).
*3 MXZ outdoor units are not designed to operate with a single indoor unit with one-to-one piping work. Please install at least two indoor units.
*4 When connecting the MFZ-KJ Series indoor unit, additional refrigerant is required. For details, please refer to page 104.
*5 Regarding MXZ-2D33, the second unit should be a different type in the case of selecting one MFZ-KJ.
*6 P series cannot be connected with MXZ-4E83VAHZ when ampere limit adjustment function is operated.
*7 Connectable outdoor unit are MXZ-2D33VA-E4, MXZ-2D42VA2-E4, MXZ-2D53VA2-E4, MXZ-2E53VAHZ-E2, MXZ-3E54VA-E2, MXZ-3E68VA-E2, MXZ-4E72VA-E2, MXZ-4E83VA-E4, MXZ-4E83VAHZ-E3, MXZ-5E102VA-E4.

## ■ PUMY-SP Series

### Branch Box Connection Compatibility Table

| Series | Type | Model Name | Capacity | | | | | | | | | | |
|---|---|---|---|---|---|---|---|---|---|---|---|---|---|
| | | | 15 | 18 | 20 | 22 | 25 | 35 | 42 | 50 | 60 | 71 | 100 |
| M series | Wall-Mounted | MSZ-LN•VG | | | | | ● | ● | | ●*1 | | | |
| | | MSZ-AP•VG | ●*1 | | ●*1 | | ●*1 | ●*1 | ●*1 | ●*1 | | | |
| | | MSZ-FH•VE2 | | | | | ● | ● | | ● | | | |
| | | MSZ-EF•VG | | ●*1 | | ●*1 | ●*1 | ●*1 | ●*1 | ●*1 | | | |
| | | MSZ-SF•VA | ● | | ● | | | | | | | | |
| | | MSZ-SF•VE3 | | | | | ● | ● | ● | ● | | | |
| | | MSZ-GF•VE2 | | | | | | | | | ● | ● | |
| | Floor-Standing | MFZ-KJ•VE2 | | | | | ●*1 | ●*1 | | ●*1 | | | |
| | 1-way Cassette | MLZ-KP•VF | | | | | ●*1 | ●*1 | | ●*1 | | | |
| S series | Ceiling-Concealed | SEZ-M•DA(L) | | | | | ●*1 | ●*1 | | ●*1 | ●*1 | ●*1 | |
| | 2×2 Cassette | SLZ-M•FA | ●*1 | | | | ●*1 | ●*1 | | ●*1 | | | |
| P series | Ceiling-Suspended | PCA-M•KA | | | | | | ● | | ● | ● | ● | ● |
| | 4-way Cassette | PLA-M•EA | | | | | | ●*1 | | ●*1 | ●*1 | ●*1 | ●*1 |
| | Ceiling-Concealed | PEAD-M•JA(L) | | | | | | | | ●*1 | ●*1 | ●*1 | ●*1 |

*1 Connectable outdoor units are PUMY-SP112/125/140V(Y)KMR1(-BS).TH only.

### LEV Kit Connection Compatibility Table

| Series | I/U Type | Model Name | Capacity | | | | | | | | | |
|---|---|---|---|---|---|---|---|---|---|---|---|---|
| | | | 15 | 18 | 20 | 22 | 25 | 35 | 42 | 50 | 60 | 71 |
| M series | Wall-Mounted | MSZ-LN•VG | | | | | ● | ● | | ● | | |
| | | MSZ-AP•VG | ●*1 | | ●*1 | | ●*1 | ●*1 | ●*1 | ●*1 | | |
| | | MSZ-FH•VE2 | | | | | ● | ● | | ● | | |
| | | MSZ-EF•VG | | ● | | ● | ● | ● | ● | ● | | |
| | | MSZ-SF•VA | ● | | ● | | | | | | | |
| | | MSZ-SF•VE3 | | | | | ● | ● | ● | ● | | |

*1 Connectable outdoor units are PUMY-SP112/125/140V(Y)KMR1(-BS).TH only.

### CITY MULTI Indoor Unit Compatibility Table

| Series | Type | Model Name | Capacity | | | | | | | | | | | | |
|---|---|---|---|---|---|---|---|---|---|---|---|---|---|---|---|
| | | | P10 | P15 | P20 | P25 | P32 | P40 | P50 | P63 | P71 | P80 | P100 | P125 | P140 |
| CITY MULTI series | 1-way Cassette | PMFY-P•VBM-E | | | ● | ● | ● | ● | | | | | | | |
| | 2-way Cassette | PLFY-P•VLMD-E | | | ● | ● | ● | ● | ● | ● | | ● | ● | ● | |
| | 4-way Cassette | PLFY-P•VEM-E | | | ● | ● | ● | ● | ● | ● | | ● | ● | ● | |
| | | PLFY-EP•VEM-E *3 | | | | | | | ● | ● | | ● | | | |
| | 2×2 Cassette | PLFY-P•VFM-E1 | | ● | ● | ● | ● | ● | ● | | | | | | |
| | Ceiling Concealed | PEFY-P•VMS1(L)-E | | ● | ● | ● | ● | ● | ● | ● | | | | | |
| | | PEFY-P•VMA(L)-E3 *2 | | | ● | ● | ● | ● | ● | ● | ● | ● | ● | ● | ● |
| | | PEFY-P•VMA3-E *1 | | | | ● | ● | ● | | | | | | | |
| | | PEFY-•VMH-E | | | | | | ● | ● | ● | ● | ● | ● | ● | ● |
| | | PEFY-P•VMR-E-L/R | | | ● | ● | ● | | | | | | | | |
| | | PEFY-P•VMH-E-F | | | | | | | | | | ● | | | ● |
| | Ceiling Suspended | PCFY-P•VKM-E | | | | | | ● | | ● | | | ● | ● | |
| | Wall Mounted | PKFY-P•VLM-E | ● | ● | ● | ● | ● | ● | ● | | | | | | |
| | | PKFY-P•VKM-E | | | | | | | | ● | | | ● | | |
| | Floor Standing | PFFY-P•VLEM-E | | | ● | ● | ● | ● | ● | ● | | | | | |
| | Floor Mounted | PFFY-P•VKM-E2 | | | ● | ● | ● | ● | | | | | | | |
| | Concealed | PFFY-P•VLRM-E | | | ● | ● | ● | ● | ● | ● | | | | | |
| | Lossnay | GUF-•RD(H)4 *2 | | | | | | | ● | | | | ● | | |

*1 Authorized connectable indoor units are as follows;
PUMY-SP112: PEFY-P25×2+P32×2,PUMY-SP125: PEFY-P25×1+P32×3, PUMY-SP140: PEFY-P32×2+P40×2
*2 Do not connect Lossnay remote controller(s). (PZ-61DR-E, PZ-60DR-E, PZ-52SF-E, PZ-43SMF-E)
*3 PLFY-EP can not connect more than 3units

## ■ PUMY-P Series

Branch Box Connection Compatibility Table

| Series | Type | Model Name | Capacity | | | | | | | | | | |
|---|---|---|---|---|---|---|---|---|---|---|---|---|---|
| | | | 15 | 18 | 20 | 22 | 25 | 35 | 42 | 50 | 60 | 71 | 100 |
| M series | Wall-Mounted | MSZ-LN•VG | | | | | ● | ● | | ● | | | |
| | | MSZ-AP•VG | ● | | ● | | ● | ● | ● | ● | | | |
| | | MSZ-FH•VE2 | | | | | ● | ● | | ● | | | |
| | | MSZ-EF•VG | | ● | | ● | ● | ● | ● | ● | | | |
| | | MSZ-SF•VA | ● | | ● | | | | | | | | |
| | | MSZ-SF•VE3 | | | | | ● | ● | ● | ● | | | |
| | | MSZ-GF•VE2 | | | | | | | | | ● | ● | |
| | Floor-Standing | MFZ-KJ•VE2 | | | | | ● | ● | | ● | | | |
| | 1-way Cassette | MLZ-KP•VF | | | | | ● | ● | | ● | | | |
| S series | Ceiling-Concealed | SEZ-M•DA(L) | | | | | ● | ● | | ● | ● | ● | |
| | 2×2 Cassette | SLZ-M•FA | ● | | | | ● | ● | | ● | | | |
| P series | Ceiling-Suspended | PCA-M•KA | | | | | | ● | | ● | ● | ● | ● |
| | 4-way Cassette | PLA-M•EA | | | | | | ● | | ● | ● | ● | ● |
| | Ceiling-Concealed | PEAD-M•JA(L) | | | | | | | | ● | ● | ● | ● |

LEV Kit Connection Compatibility Table

| Series | I/U Type | Model Name | Capacity | | | | | | | | | |
|---|---|---|---|---|---|---|---|---|---|---|---|---|
| | | | 15 | 18 | 20 | 22 | 25 | 35 | 42 | 50 | 60 | 71 |
| M series | Wall-Mounted | MSZ-LN•VG | | | | | ● | ● | | ● | | |
| | | MSZ-AP•VG | ● | | ● | | ● | ● | ● | ● | | |
| | | MSZ-FH•VE2 | | | | | ● | ● | | ● | | |
| | | MSZ-EF•VG | | ● | | ● | ● | ● | ● | ● | | |
| | | MSZ-SF•VA | ● | | ● | | | | | | | |
| | | MSZ-SF•VE3 | | | | | ● | ● | ● | ● | | |
| | Floor-Standing | MFZ-KJ•VE2 | | | | | ● | ● | | ● | | |

CITY MULTI Indoor Unit Compatibility Table

| Series | Type | Model Name | Capacity | | | | | | | | | | | | |
|---|---|---|---|---|---|---|---|---|---|---|---|---|---|---|---|
| | | | P10 | P15 | P20 | P25 | P32 | P40 | P50 | P63 | P71 | P80 | P100 | P125 | P140 |
| CITY MULTI series | 1-way Cassette | PMFY-P•VBM-E | | | ● | ● | ● | ● | | | | | | | |
| | 2-way Cassette | PLFY-P•VLMD-E | | | ● | ● | ● | ● | ● | ● | | ● | ● | ● | |
| | 4-way Cassette | PLFY-P•VEM-E | | | ● | ● | ● | ● | ● | ● | | ● | ● | ● | |
| | | PLFY-EP•VEM-E*4 | | | | | | | ● | ● | | ● | | | |
| | 2×2 Cassette | PLFY-P•VFM-E1 | | ● | ● | ● | ● | ● | ● | | | | | | |
| | Ceiling Concealed | PEFY-P•VMS1(L)-E | ● | ● | ● | ● | ● | ● | ● | ● | | | | | |
| | | PEFY-P•VMA(L)-E3 | | | ● | ● | ● | ● | ● | ● | ● | ● | ● | ● | ● |
| | | PEFY-P•VMA3-E*1 | | | | ● | ● | ● | | ● | | | | | |
| | | PEFY-P•VMH-E | | | | | | ● | ● | ● | ● | ● | ● | ● | ● |
| | | PEFY-P•VMR-E-L/R | | | ● | ● | ● | | | | | | | | |
| | | PEFY-P•VMH-E-F | | | | | | | | | | ● | | | ● |
| | Ceiling Suspended | PCFY-P•VKM-E | | | | | | ● | | ● | | | ● | ● | |
| | Wall Mounted | PKFY-P•VLM-E | ● | ● | ● | ● | ● | ● | ● | | | | | | |
| | | PKFY-P•VKM-E | | | | | | | | ● | | | ● | | |
| | Floor Standing Floor Mounted Concealed | PFFY-P•VLEM-E | | | ● | ● | ● | ● | ● | ● | | | | | |
| | | PFFY-P•VKM-E2 | | | ● | ● | ● | ● | | | | | | | |
| | | PFFY-P•VLRM-E | | | ● | ● | ● | ● | ● | ● | | | | | |
| | | PFFY-P•VLRMM-E | | | ● | ● | ● | ● | ● | ● | | | | | |
| | Air to Water unit | PWFY-P•VM-E1/E2-AU*2 | | | | | | | | | | | ● | | |
| | Lossnay | GUF-•RD(H)4*3 | | | | | | | ● | | | | ● | | |

*1 Authorized connectable indoor units are as follows;
PUMY-P112:PEFY-P25×2+P32×2, PUMY-P125:PEFY-P32×4, PUMY-P140:PEFY-P32×3+P40×1, PUMY-P200YKM2:PEFY-P40×2+P63×2
*2 Note that connection is not allowed inside EU countries.
PWFY can not connect to PUMY-P200YKM2.
*3 Do not connect Lossnay remote controller(s). (PZ-61DR-E, PZ-60DR-E, PZ-52SF-E, PZ-43SMF-E)
*4 PUMY-PI12/125/140: PLFY-EP can not connect more than 3 units
PUMY-P200: Authorized connectable indoor units are only as follows; PLFY-EP63VEM-E×3.

# POWERFUL HEATING

SERIES

# SELECTION

Choose the series that best matches the building layout.

## MSZ-LN VGHZ, MSZ-FT/MFZ-KJ VEHZ SERIES

The line-up includes outdoor models 25–50

### Outdoor Unit

R32
R410A

MUZ-LN25/35VGHZ2
MUZ-FT25/35VGHZ
MUFZ-KJ25/35VEHZ

R32
R410A

MUZ-LN50VGHZ2
MUZ-FT50VGHZ
MUFZ-KJ50VEHZ

### Indoor Unit

**Wall-mounted**

R32
R410A

MSZ-LN25/35/50VG2
(W)(V)(R)(B)

R32

MSZ-FT25/35/50VGK

**Floor-standing**

R410A

MFZ-KJ25/35/50VE2

## ZUBADAN SERIES

The line-up includes outdoor unit models 112-140 class and three types of indoor units.

### Outdoor Unit

R410A

PUHZ-SHW112VHA
PUHZ-SHW112/140YHA

### Indoor Unit

**4-way cassette**

R32
R410A

PLA Series

**Ceiling-concealed**

R32
R410A

PEAD Series

**Wall-mounted**

R32
R410A

PKA Series

## MXZ-VFHZ SERIES

### Outdoor Unit

R32

MXZ-2F53VFHZ

R32

MXZ-4F83VFHZ

## MXZ-VAHZ SERIES

R410A

MXZ-2E53VAHZ

R410A

MXZ-4E83VAHZ

# VGHZ SERIES

R32 Single / Multi
R410A Multi

Unlike conventional air conditioning systems, the LN Series and FT Series don't lose heating capacity when it's cold outside. Original technologies ensure excellent heating performance under extremely low outdoor temperatures and an impressive guaranteed operating range.

MSZ-LN25/35/50VG2(W)(V)(R)(B)

MSZ-FT25/35/50VGK

## Unparalleled Heating Performance

LN Series and FT Series outdoor units are equipped with a high-output compressor that provides enhanced heating performance under low outdoor temperatures. The heating operation range is extended down to -25°C.

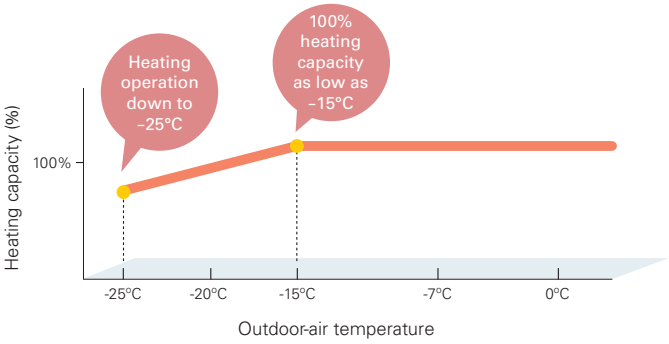


### Declared Capacity (at reference design temperature)

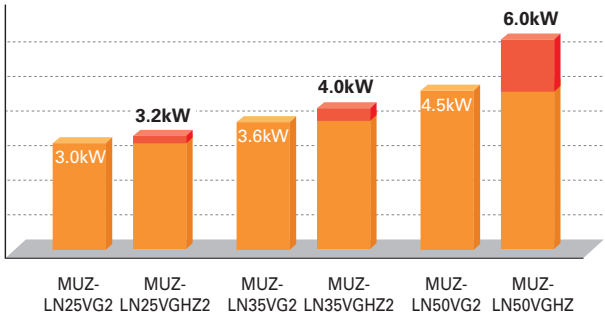


### Compact, Powerful Compressor

A special manufacturing technology, "Heat Caulking Fixing Method," has been introduced to reduce compressor size while maintaining a high compressor output. This technology enables the installation of a powerful compressor in compact MUZ outdoor units. As a result, excellent heating performance is achieved when operating in cold outdoor environments.

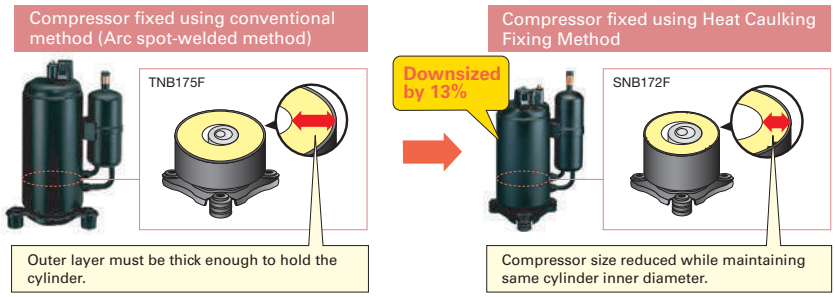

## High Energy Efficiency – Energy Rank of A+ or higher for All Models

With indoor units that combine functionality, design and capacity and outdoor units equipped with a high-efficiency compressor, the MUZ-LN VGHZ and MUZ-FT VGHZ simultaneously achieves high heating capacity and energy-saving performance.

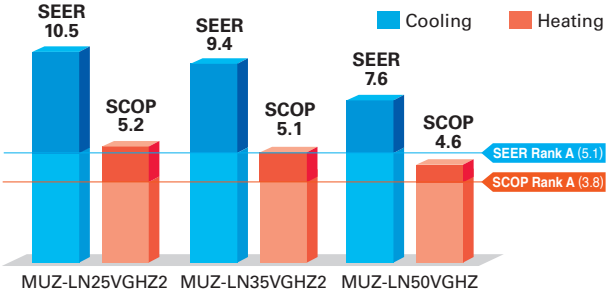


## Freeze-prevention Heater Equipped as Standard

The Freeze-prevention heater restricts lowered capacity and operation shutdowns caused by the drain water freezing. This supports stable operation in low-temperature environments.

**Operation Guaranteed at Outside Temperature of –25°C**

Without Freeze-prevention heater

With Freeze-prevention heater

# MSZ-LN VGHZ SERIES

R32 | DC Inverter | Joint Lap | DC Fan Motor | PAM | Grooved Piping | SEER A+++ (25 / 35) | SCOP A+++ (25 / 35)

## Indoor Unit / Remote Controller

GOOD DESIGN AWARD 2016 BEST 100

<Pearl White>

MSZ-LN25/35/50VG2V

<Ruby Red>

MSZ-LN25/35/50VG2R

<Natural White>

MSZ-LN25/35/50VG2W

<Onyx Black>

MSZ-LN25/35/50VG2B

## Outdoor Unit

MUZ-LN25/35VGHZ2

MUZ-LN50VGHZ

3D i-see Sensor | AREA | HUMAN | Econo Cool | AUTO VANE | Plasma Quad Plus | Dual Barrier Coating | Double Vane | SWING | SWING | AUTO | Weekly Timer | i save | ACO | Auto Restart

Low Temp Cooling | Group Control (Optional) | M-NET connection (Optional) | Wi-Fi Interface | MXZ connection (25/35) | 10°C | Night (Indoor) | Cleaning-free pipe reuse | Flare connection | Self Diagnosis | Failure Recall

| Type | | | | Inverter Heat Pump | | |
|---|---|---|---|---|---|---|
| Indoor Unit | | | | MSZ-LN25VG(W)(V)(R)(B) | MSZ-LN35VG(W)(V)(R)(B) | MSZ-LN50VG(W)(V)(R)(B) |
| Outdoor Unit | | | | MUZ-LN25VGHZ | MUZ-LN35VGHZ | MUZ-LN50VGHZ |
| Refrigerant | | | | R32 (*1) | | |
| Power Supply | Source | | | Outdoor Power supply | | |
| | Outdoor (V/Phase/Hz) | | | 230/Single/50 | | |
| Cooling | Design Load | | kW | 2.5 | 3.5 | 5.0 |
| | Annual Electricity Consumption (*2) | | kWh/a | 83 | 130 | 230 |
| | SEER (*4) | | | 10.5 | 9.4 | 7.6 |
| | | Energy Efficiency Class | | A+++ | A+++ | A++ |
| | Capacity | Rated | kW | 2.5 | 3.5 | 5.0 |
| | | Min - Max | kW | 0.8 - 3.5 | 0.8 - 4.0 | 1.4 - 5.8 |
| | Total Input | Rated | kW | 0.485 | 0.820 | 1.380 |
| Heating (Average Season)(*5) | Design Load | | kW | 3.2 (–10°C) | 4.0 (–10°C) | 6.0 (–10°C) |
| | Declared Capacity | at reference design temperature | kW | 3.2 (–10°C) | 4.0 (–10°C) | 6.0 (–10°C) |
| | | at bivalent temperature | kW | 3.2 (–10°C) | 4.0 (–10°C) | 6.0 (–10°C) |
| | | at operation limit temperature | kW | 2.3 (–25°C) | 3.1 (–25°C) | 4.7 (–25°C) |
| | Back Up Heating Capacity | | kW | 0.0 (–10°C) | 0.0 (–10°C) | 0.0 (–10°C) |
| | Annual Electricity Consumption (*2) | | kWh/a | 861 | 1098 | 1826 |
| | SCOP (*4) | | | 5.2 | 5.1 | 4.6 |
| | | Energy Efficiency Class | | A+++ | A+++ | A++ |
| | Capacity | Rated | kW | 3.2 | 4.0 | 6.0 |
| | | Min - Max | kW | 0.8 - 6.3 | 0.9 - 6.6 | 1.8 - 8.7 |
| | Total Input | Rated | kW | 0.600 | 0.820 | 1.480 |
| Operating Current (max) | | | A | 9.9 | 10.5 | 15.2 |
| Indoor Unit | Input | Rated | kW | 0.027 | 0.027 | 0.034 |
| | Operating Current (max) | | A | 0.3 | 0.3 | 0.4 |
| | Dimensions | H × W × D | mm | 307 - 890 - 233 | 307 - 890 - 233 | 307 - 890 - 233 |
| | Weight | | kg | 15.5 | 15.5 | 15.5 |
| | Air Volume (SLo-Lo-Mid-Hi-SHi (*3) (Dry/Wet)) | Cooling | $m^3$/min | 4.3 - 5.8 - 7.1 - 8.8 - 11.9 | 4.3 - 5.8 - 7.1 - 8.8 - 12.8 | 5.7 - 7.6 - 8.9 - 10.6 - 13.9 |
| | | Heating | $m^3$/min | 4.0 - 5.7 - 7.1 - 8.5 - 14.4 | 4.3 - 5.7 - 7.1 - 8.5 - 13.7 | 5.4 - 6.4 - 8.5 - 10.7 - 15.7 |
| | Sound Level (SPL) (SLo-Lo-Mid-Hi-SHi (*3)) | Cooling | dB(A) | 19 - 23 - 29 - 36 - 42 | 19 - 24 - 29 - 36 - 43 | 27 - 31 - 35 - 39 - 46 |
| | | Heating | dB(A) | 19 - 24 - 29 - 36 - 45 | 19 - 24 - 29 - 36 - 45 | 25 - 29 - 34 - 39 - 47 |
| | Sound Level (PWL) | | dB(A) | 58 | 58 | 60 |
| Outdoor Unit | Dimensions | H × W × D | mm | 550 - 800 - 285 | 550 - 800 - 285 | 880 - 840 - 330 |
| | Weight | | kg | 35 | 36 | 55 |
| | Air Volume | Cooling | $m^3$/min | 31.4 | 33.8 | 48.8 |
| | | Heating | $m^3$/min | 27.4 | 27.4 | 51.3 |
| | Sound Level (SPL) | Cooling | dB(A) | 46 | 49 | 51 |
| | | Heating | dB(A) | 49 | 50 | 54 |
| | Sound Level (PWL) | Cooling | dB(A) | 60 | 61 | 64 |
| | Operating Current (max) | | A | 9.6 | 10.2 | 14.8 |
| | Breaker Size | | A | 10 | 12 | 16 |
| Ext. Piping | Diameter | Liquid / Gas | mm | 6.35/9.52 | 6.35/9.52 | 6.35/9.52 |
| | Max. Length | Out-In | m | 20 | 20 | 30 |
| | Max. Height | Out-In | m | 12 | 12 | 15 |
| Guaranteed Operating Range [Outdoor] | | Cooling | °C | –10 ~ +46 | –10 ~ +46 | –10 ~ +46 |
| | | Heating | °C | –25 ~ +24 | –25 ~ +24 | –25 ~ +24 |

(*1) Refrigerant leakage contributes to climate change. Refrigerant with lower global warming potential (GWP) would contribute less to global warming than a refrigerant with higher GWP, if leaked to the atmosphere. This appliance contains a refrigerant fluid with a GWP equal to 550. This means that if 1 kg of this refrigerant fluid would be leaked to the atmosphere, the impact on global warming would be 550 times higher than 1 kg of $CO_2$, over a period of 100 years. Never try to interfere with the refrigerant circuit yourself or disassemble the product yourself and always ask a professional. The GWP of R32 is 675 in the IPCC 4th Assessment Report.
(*2) Energy consumption based on standard test results. Actual energy consumption will depend on how the appliance is used and where it is located.
(*3) SHi: Super High
(*4) SEER, SCOP and other related description are based on COMMISSION DELEGATED REGULATION (EU) No.626/2011. The temperature conditions for calculating SCOP are based on "Average Season".
(*5) Please see page 51-52 for heating (warmer season/colder season) specifications.

# MSZ-FT VGK SERIES

R32 | DC Inverter | Joint Lap | DC Fan Motor | PAM | Grooved Piping | 25-35 SEER A+++ | 25-35 SCOP A++

## Indoor Unit

FT25/35/50VGK

GOOD DESIGN

## Outdoor Unit

MUZ-FT25VGHZ

MUZ-FT35/50VGHZ

## Remote Controller

back light

Econo Cool | Pure White | AUTO VANE | Electrostatic Anti-allergy | Double Vane | SWING | SWING | AUTO | Weekly Timer | i save | ACO | Auto Restart | Low Temp Cooling | Optional | Group Control Optional

M-NET connection Optional | Wi-Fi Interface | Night | Cleaning-free, pipe reuse | Flare connection | Self Diagnosis | Failure Recall

| Type | | | | Inverter Heat Pump | | |
|---|---|---|---|---|---|---|
| Indoor Unit | | | | MSZ-FT25VGK | MSZ-FT35VGK | MSZ-FT50VGK |
| Outdoor Unit | | | | MUZ-FT25VGHZ | MUZ-FT35VGHZ | MUZ-FT50VGHZ |
| Refrigerant | | | | R32 (*1) | | |
| Power Supply | Source | | | Outdoor power supply | | |
| | Outdoor (V/Phase/Hz) | | | 230 / Single / 50 | | |
| Cooling | Design Load | | kW | 2.5 | 3.5 | 5.0 |
| | Annual Electricity Consumption (*2) | | kWh/a | 101 | 142 | 243 |
| | SEER (*4) | | | 8.6 | 8.6 | 7.2 |
| | | Energy Efficiency Class | | A+++ | A+++ | A++ |
| | Capacity | Rated | kW | 2.5 | 3.5 | 5.0 |
| | | Min - Max | kW | 0.8 - 3.5 | 0.8 - 4.0 | 0.8 - 5.2 |
| | Total Input | Rated | kW | 0.580 | 0.910 | 1.630 |
| | EER | | | 4.31 | 3.85 | 3.07 |
| | | EEL Rank | | A | A | B |
| Heating (Average Season) | Design Load | | kW | 3.2(-10°C) | 4.0(-10°C) | 5.0(-10°C) |
| | Declared Capacity | at reference design temperature | kW | 3.2(-10°C) | 4.0(-10°C) | 5.0(-10°C) |
| | | at bivalent temperature | kW | 3.2(-10°C) | 4.0(-10°C) | 5.0(-10°C) |
| | | at operation limit temperature | kW | 3.0(-25°C) | 3.4(-25°C) | 3.6(-25°C) |
| | Back Up Heating Capacity | | kW | 0.0(-10°C) | 0.0(-10°C) | 0.0(-10°C) |
| | Annual Electricity Consumption (*2) | | kWh/a | 973 | 1216 | 1625 |
| | SCOP | | | 4.6 | 4.6 | 4.63 |
| | | Energy Efficiency Class | | A++ | A++ | A+ |
| | Capacity | Rated | kW | 3.2 | 4.0 | 5.0 |
| | | Min | kW | 0.9 | 0.9 | 0.9 |
| | | Max at 7°C | kW | 6.2 | 6.6 | 7.8 |
| | | Max at -15°C | kW | 3.6 | 4.4 | 5.0 |
| | | Max at -15°C | kW | 3.0 | 3.4 | 3.6 |
| | Total Input | Rated | kW | 0.760 | 1.020 | 1.300 |
| | COP | | | 4.21 | 3.92 | 3.85 |
| | | EEL Rank | | A | A | A |
| Heating (Warmer Season) | Design Load | | kW | 1.8(2°C) | 2.2(2°C) | 2.7(2°C) |
| | Declared Capacity | at reference design temperature | kW | 1.8(2°C) | 2.2(2°C) | 2.7(2°C)) |
| | | at bivalent temperature | kW | 1.8(2°C) | 2.2(2°C) | 2.7(2°C) |
| | | at operation limit temperature | kW | 3.0(-25°C) | 3.4(-25°C) | 3.6(-25°C) |
| | Back Up Heating Capacity | | kW | 0.0(2°C) | 0.0(2°C) | 0.0(2°C) |
| | Annual Electricity Consumption (*2) | | kWh/a | 432 | 527 | 684 |
| | SCOP | | | 5.8 | 5.8 | 5.5 |
| | | Energy Efficiency Class | | A+++ | A+++ | A+++ |
| Operating Current (max) | | | A | 10.0 | 13.9 | 13.9 |
| Indoor Unit | Input | Rated | kW | 0.039 | 0.04 | 0.047 |
| | Operating Current (max) | | A | 0.4 | 0.4 | 0.4 |
| | Dimensions | H × W × D | mm | 280 838 229 | 280 838 229 | 280 838 229 |
| | Weight | | kg | 10 | 10 | 10 |
| | Air Volume (SLo-Lo-Mid-Hi-SHi (Dry/Wet)) | Cooling | $m^3$/min | 3.9 - 5.9 - 8.2 - 10.4 - 12.3 | 3.9 - 6.1 - 8.3 - 10.7 - 13.1 | 5.5 -7 .6 - 9.8 - 12.0 - 13.1 |
| | | Heating | $m^3$/min | 3.9 - 6.3 - 9.0 - 12.0 - 13.2 | 3.9 - 6.9 - 10.2 - 13.5 - 14.7 | 5.5 - 8.4 - 11.4 - 14.4 - 15.5 |
| | Sound Level (SPL) (SLo-Lo-Mid-Hi-SHi) | Cooling | dB(A) | 19 - 27 - 36 - 41 - 46 | 19 - 27 - 36 - 42 - 47 | 28 - 34 - 40 - 45 - 48 |
| | | Heating | dB(A) | 19 - 31 - 39 - 46 - 49 | 19 - 33 - 42 - 49 - 52 | 28 - 36 - 45 - 51 - 54 |
| | Sound Level (PWL) | | dB(A) | 60 | 60 | 60 |
| Outdoor Unit | Dimensions | H × W × D | mm | 550 800 285 | 714 800 285 | 714 800 285 |
| | Weight | | kg | 34 | 40 | 40 |
| | Air Volume | Cooling | $m^3$/min | 30.4 | 40.2 | 40.2 |
| | | Heating | $m^3$/min | 30.4 | 40.2 | 40.2 |
| | Sound Level (SPL) | Cooling | dB(A) | 46 | 49 | 51 |
| | | Heating | dB(A) | 49 | 52 | 54 |
| | Sound Level (PWL) | Cooling | dB(A) | 60 | 61 | 64 |
| | Operating Current (max) | | A | 9.6 | 13.5 | 13.5 |
| | Breaker Size | | A | 12 | 16 | 16 |
| Ext. Piping | Diameter | Liquid / Gas | mm | 6.35 / 9.52 | 6.35 / 9.52 | 6.35 / 9.52 |
| | Chargeless piping lengh | Out-In | m | 7.5 | 7.5 | 7.5 |
| | Max. Length | Out-In | m | 20 | 30 | 30 |
| | Max. Height | Out-In | m | 12 | 15 | 15 |
| Guaranteed Operating Range [Outdoor] | | Cooling | °C | -10 ~ +46 | -10 ~ +46 | -10 ~ +46 |
| | | Heating | °C | -25 ~ +24 | -25 ~ +24 | -25 ~ +24 |

(*1) Refrigerant leakage contributes to climate change. Refrigerant with lower global warming potential (GWP) would contribute less to global warming than a refrigerant with higher GWP, if leaked to the atmosphere. This appliance contains a refrigerant fluid with a GWP equal to 1975. This means that if 1kg of this refrigerant fluid would be leaked to the atmosphere, the impact on global warming would be 1975 times higher than 1kg of $CO_2$, over a period of 100 years. Never try to interfere with the refrigerant circuit yourself or disassemble the product yourself and always ask a professional. The GWP of R410A is 2088 in the IPCC 4th Assessment Report.

(*2) Energy consumption based on standard test results. Actual energy consumption will depend on how the appliance is used and where it is located.

# MFZ-KJ SERIES

DC Inverter | DC Fan Motor | PAM | Grooved Piping | SEER A+++ | SCOP A+

## Indoor Unit

R410A
Single / Multi

GOOD DESIGN

MFZ-KJ25/35/50VE2

## Outdoor Unit

MUFZ-KJ25/35VEHZ

MUFZ-KJ50VEHZ

## Remote Controller

Econo Cool | Pure White | AUTO VANE | Anti-allergy Enzyme | Nano Platinum | SWING | AUTO | i save | ACO | Auto Restart | Low Temp Cooling | Optional | Group Control Optional | M-NET connection Optional | Wi-Fi Interface Optional

Cleaning-free pipe route | Flare connection | Self Diagnosis | Failure Recall

| Type | | | | Inverter Heat Pump | | |
|---|---|---|---|---|---|---|
| Indoor Unit | | | | MFZ-KJ25VE2 | MFZ-KJ35VE2 | MFZ-KJ50VE2 |
| Outdoor Unit | | | | MUFZ-KJ25VEHZ | MUFZ-KJ35VEHZ | MUFZ-KJ50VEHZ |
| Refrigerant | | | | R410A (*1) | | |
| Power Supply | Source | | | Outdoor power supply | | |
| | Outdoor (V/Phase/Hz) | | | 230 / Single / 50 | | |
| Cooling | Design Load | | kW | 2.5 | 3.5 | 5.0 |
| | Annual Electricity Consumption (*2) | | kWh/a | 102 | 150 | 266 |
| | SEER (*4) | | | 8.5 | 8.1 | 6.5 |
| | | Energy Efficiency Class | | A+++ | A++ | A++ |
| | Capacity | Rated | kW | 2.5 | 3.5 | 5.0 |
| | | Min - Max | kW | 0.5 - 3.4 | 0.5 - 3.7 | 1.6 - 5.7 |
| | Total Input | Rated | kW | 0.540 | 0.940 | 1.410 |
| Heating (Average Season) | Design Load | | kW | 3.5 | 3.6 | 4.5 |
| | Declared Capacity | at reference design temperature | kW | 3.5 | 3.6 | 4.5 |
| | | at bivalent temperature | kW | 3.5 | 3.6 | 4.5 |
| | | at operation limit temperature | kW | 1.6 | 2.3 | 3.3 |
| | Back Up Heating Capacity | | kW | 0.0 | 0.0 | 0.0 |
| | Annual Electricity Consumption (*2) | | kWh/a | 1104 | 1158 | 1467 |
| | SCOP (*4) | | | 4.4 | 4.3 | 4.2 |
| | | Energy Efficiency Class | | A+ | A+ | A+ |
| | Capacity | Rated | kW | 3.4 | 4.3 | 6.0 |
| | | Min - Max | kW | 1.2 - 5.1 | 1.2 - 5.8 | 2.2 - 8.4 |
| | Total Input | Rated | kW | 0.770 | 1.100 | 1.610 |
| Operating Current (max) | | | A | 4.42 | 3.91 | 3.73 |
| Indoor Unit | Input | Rated | kW | 0.016 | 0.016 | 0.038 |
| | Operating Current (max) | | A | 0.17 | 0.17 | 0.34 |
| | Dimensions | H × W × D | mm | 600 - 750 - 215 | | |
| | Weight | | kg | 15 | 15 | 15 |
| | Air Volume (SLo-Lo-Mid-Hi-SHi (*3) (Dry/Wet)) | Cooling | $m^3$/min | 3.9 - 4.9 - 5.9 - 7.1 - 8.2 | 3.9 - 4.9 - 5.9 - 7.1 - 8.2 | 5.6 - 6.7 - 8.0 - 9.3 - 10.6 |
| | | Heating | $m^3$/min | 3.9 - 5.1 - 6.2 - 7.7 - 9.7 | 3.9 - 5.1 - 6.2 - 7.7 - 9.7 | 6.0 - 7.4 - 9.4 - 11.6 - 14.0 |
| | Sound Level (SPL) (SLo-Lo-Mid-Hi-SHi (*3)) | Cooling | dB(A) | 20 - 25 - 30 - 35 - 39 | 20 - 25 - 30 - 35 - 39 | 27 - 31 - 35 - 39 - 44 |
| | | Heating | dB(A) | 19 - 25 - 30 - 35 - 41 | 19 - 25 - 30 - 35 - 41 | 29 - 35 - 40 - 45 - 50 |
| | Sound Level (PWL) | | dB(A) | 49 | 50 | 56 |
| Outdoor Unit | Dimensions | H × W × D | mm | 550 - 800 - 285 | | 880 - 840 - 330 |
| | Weight | | kg | 37 | 37 | 55 |
| | Air Volume | Cooling | $m^3$/min | 31.3 | 31.3 | 45.8 |
| | | Heating | $m^3$/min | 33.6 | 33.6 | 45.8 |
| | Sound Level (SPL) | Cooling | dB(A) | 46 | 47 | 49 |
| | | Heating | dB(A) | 51 | 51 | 51 |
| | Sound Level (PWL) | Cooling | dB(A) | 59 | 60 | 63 |
| | Operating Current (max) | | A | 9.2 | 10 | 13.6 |
| | Breaker Size | | A | 10 | 12 | 16 |
| Ext. Piping | Diameter | Liquid / Gas | mm | 6.35 / 9.52 | 6.35 / 9.52 | 6.35 / 12.7 |
| | Max. Length | Out-In | m | 20 | 20 | 30 |
| | Max. Height | Out-In | m | 12 | 12 | 15 |
| Guaranteed Operating Range [Outdoor] | | Cooling | ℃ | −10 ~ +46 | −10 ~ +46 | −10 ~ +46 |
| | | Heating | ℃ | −25 ~ +24 | −25 ~ +24 | −25 ~ +24 |

(*1) Refrigerant leakage contributes to climate change. Refrigerant with lower global warming potential (GWP) would contribute less to global warming than a refrigerant with higher GWP, if leaked to the atmosphere. This appliance contains a refrigerant fluid with a GWP equal to 1975. This means that if 1kg of this refrigerant fluid would be leaked to the atmosphere, the impact on global warming would be 1975 times higher than 1kg of $CO_2$, over a period of 100 years. Never try to interfere with the refrigerant circuit yourself or disassemble the product yourself and always ask a professional.
The GWP of R410A is 2088 in the IPCC 4th Assessment Report.
(*2) Energy consumption based on standard test results. Actual energy consumption will depend on how the appliance is used and where it is located.
(*3) SHi: Super High
(*4) SEER, SCOP and other related description are based on COMMISSION DELEGATED REGULATION (EU) No.626/2011. The temperature conditions for calculating SCOP are based on "Average Season".

# ZUBADAN SERIES

The ZUBADAN Series incorporates an original Flash Injection technology that improves the already high heating capacity of the system. This new member of the series line-up ensures comfortable heat pump-driven heating performance in cold regions.

✻Units in photo are Japanese models.
European model specifications are different.

## Improved Heating Performance

Mitsubishi Electric's unique "Flash Injection" circuit achieves remarkably high heating performance. This technology has resulted in an excellent heating capacity rating in outdoor temperatures as low as -15°C, and the guaranteed heating operation range of the heating mode has been extended to -25°C. Accordingly, the heat-pump units of the ZUBADAN Series are perfect for warming homes in the coldest of regions.

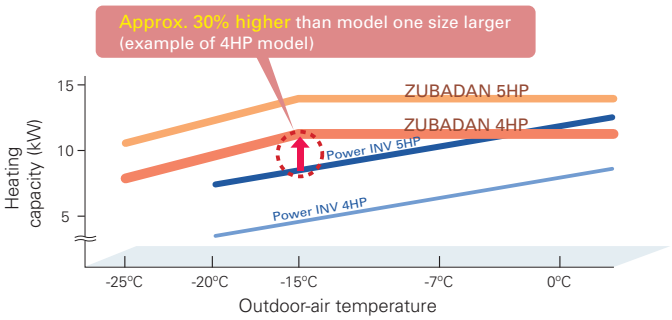


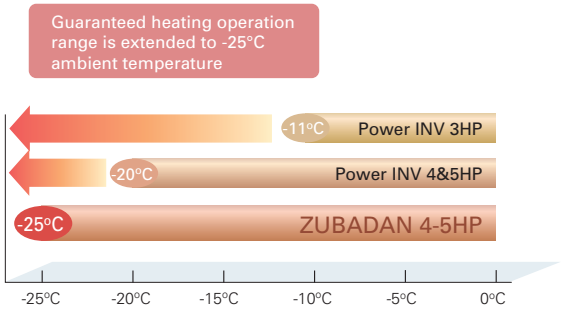


## Enhanced Comfort

The Flash Injection circuit improves start-up and recover from the defrosting operation. A newly introduced defrost operation control also improves defrost frequency. These features enable the temperature to reach the set temperature more quickly, and contribute to maintaining it at the desired setting.

### Quick Start-up

■Operation at +2°C outdoor temperature

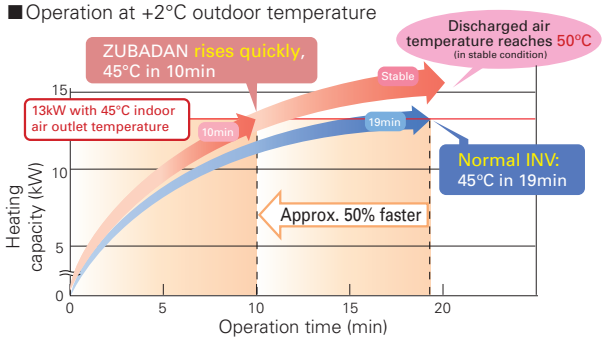


■Operation at -20°C outdoor temperature

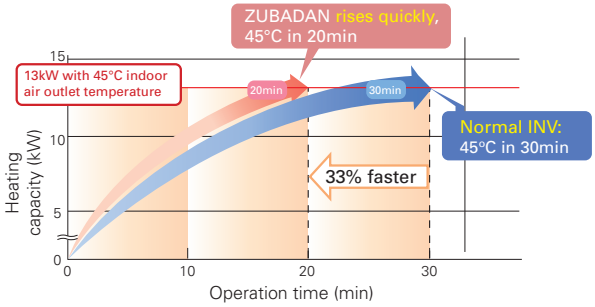


### ZUBADAN Defrost Control and Faster Recovery from Defrost Operation

Field Test Results: Office building in Asahikawa, Hokkaido, Japan

■Operation data for 25 Jan. 2005

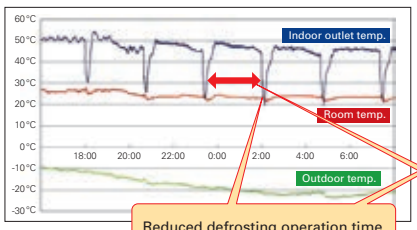


Reduced defrosting operation time from 4 to 3 minutes.

■Operation data for 2 Dec. 2004

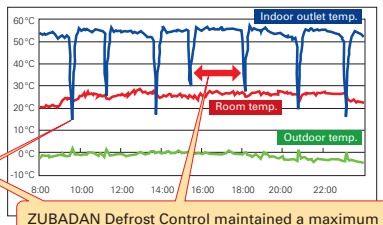


ZUBADAN Defrost Control maintained a maximum interval of 150 minutes between defrosting operations at outdoor temperatures of approximately -20°C and 0°C.

Installation example

# ErP Lot 10 Compliant with High Energy-efficiency Achieving SEER/SCOP Rank A and A+

Powerful heating yet annually high energy efficiency in both cooling and heating, achieving rank A and A+.

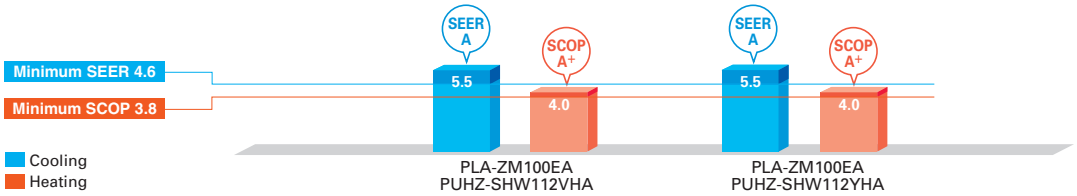


## Mitsubishi Electric's Flash Injection Technology The Key to High Heating Performance at Low Outdoor Temperatures

### ■Flash Injection Circuit

ZUBADAN

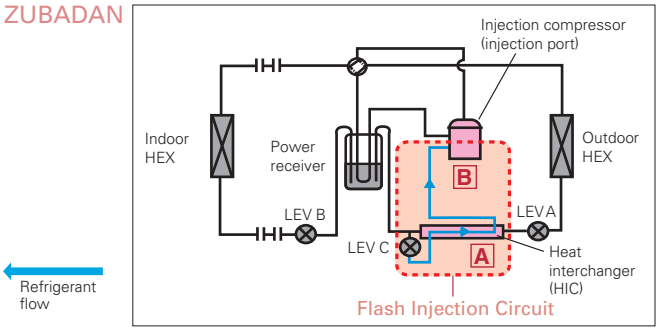


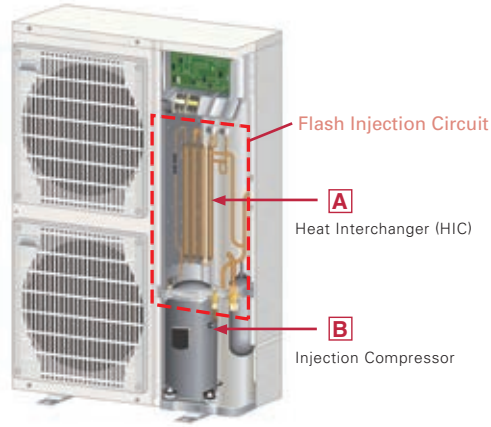


The ZUBADAN Series is equipped with Mitsubishi Electric's original Flash Injection Circuit, which is comprised of a bypass circuit and heat interchanger (HIC). The HIC transforms rerouted liquid refrigerant into a gas-liquid state to lower compression load. This process ensures excellent heating performance even when the outdoor temperature drops very low.
In traditional units, when the outdoor temperature is low, the volume of refrigerant circulating in the compressor decreases due to the drop in refrigerant pressure and the protection from overheating caused by high compression, thereby reducing heating capacity. The Flash Injection Circuit injects refrigerant to maintain the refrigerant circulation volume and compressor operation load, thereby maintaining heating capacity.

Mollier Chart Image Representing Flash Injection Circuit Operation

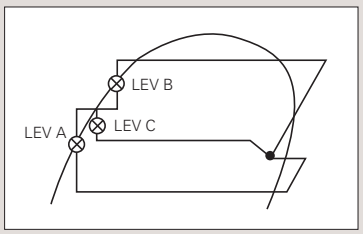


### A Heat Interchanger (HIC)

HIC cross-sectional view

Purpose: Transform liquid refrigerant into liquid-gas state

Effect: Injection circuit increases energy efficiency

The compressor is subjected to a heavy load when compressing liquid refrigerant, and the result is lower operation efficiency. The addition of HIC supports refrigerant heat exchange at two different pressure levels. The heat-exchange process transforms the injected liquid refrigerant into a gas liquid state, thereby decreasing the load on the compressor during the compression process.

### B Injection Compressor

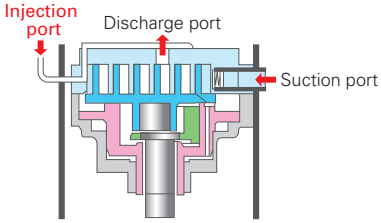


Purpose: To increase the volume of refrigerant being circulated

Effect: Improves heating capacity at low outdoor temperatures, and enables higher indoor-air outlet temperature adjustment and higher defrost operation speed

Refrigerant passes from the HIC into the compressor through the injection port. Having two refrigerant inlets makes it possible to raise the volume of refrigerant being circulated when the outdoor temperature is low and at the start of heating operation.

# PLZ-SHW SERIES

DC Inverter · Vector Sine Wave · DC Scroll · Rare Earth Magnet · DC Fan Motor · Vector-Wave · PAM · Power Receiver · Grooved Piping · ZUBADAN

## Indoor Unit

R32
R410A

PLA-ZM100/125EA

### Panel

| Panel | With Signal Receiver | With 3D i-see Sensor | With Wireless Remote Controller | With Auto Elevation |
|---|---|---|---|---|
| PLP-6EA | | | | |
| PLP-6EAL | ✓ | | | |
| PLP-6EAE | | ✓ | | |
| PLP-6EALE | ✓ | ✓ | | |
| PLP-6EAJ | ✓ | | | ✓ |
| PLP-6EAJE | ✓ | ✓ | | ✓ |
| PLP-6EALM | ✓ | | ✓ | |
| PLP-6EALME | ✓ | ✓ | ✓ | |

## Outdoor Unit

R410A

PUHZ-SHW112VHA(-BS)
PUHZ-SHW112/140YHA(-BS)

## Remote Controller

Enclosed in
PLP-6EALM/PLP-6EALME

*optional

*optional

*optional

i-see Sensor (Optional) · Demand Control (Optional 100/125) · Pure White · AUTO VANE · Fresh-air Intake · High-efficiency (Optional) · Long Life · Check! · SWING · High Ceiling · Low Ceiling · AUTO · ACO · Auto Restart · Low Temp Cooling

Silent · Ampere Limit · Rotation Back-up (Optional) · (Optional) · Group Control · M-NET connection (Optional) · Wi-Fi Interface (Optional) · COMPO · Cleaning-free pipe route · Wiring Reuse (Optional) · Drain Lift Up · Pump Down · Flare connection · Self Diagnosis · Failure Recall

| Type | | | | Inverter Heat Pump | | |
|---|---|---|---|---|---|---|
| Indoor Unit | | | | PLA-ZM100EA | | PLA-ZM125EA |
| Outdoor Unit | | | | PUHZ-SHW112VHA | PUHZ-SHW112YHA | PUHZ-SHW140YHA |
| Refrigerant | | | | R410A*1 | | |
| Power Supply | Source | | | Outdoor power supply | | |
| | Outdoor (V/Phase/Hz) | | | 230 / 1 / 50 | 400 / 3 / 50 | 400 / 3 / 50 |
| Cooling | Capacity | Rated | kW | 10.0 | 10.0 | 12.5 |
| | | Min - Max | kW | 4.9 - 11.4 | 4.9 - 11.4 | 5.5 - 14.0 |
| | Total Input | Rated | kW | 2.857 | 2.857 | 5.000 |
| | EER | | | – | – | 2.50 |
| | | EEL Rank | | – | – | – |
| | Design Load | | kW | 10.0 | 10.0 | – |
| | Annual Electricity Consumption*2 | | kWh/a | 633 | 633 | – |
| | SEER | | | 5.5 | 5.5 | – |
| | | Energy Efficiency Class | | A | A | – |
| Heating (Average Season) | Capacity | Rated | kW | 11.2 | 11.2 | 14.0 |
| | | Min - Max | kW | 4.5 - 14.0 | 4.5 - 14.0 | 5.0 - 16.0 |
| | Total Input | Rated | kW | 2.667 | 2.667 | 4.000 |
| | COP | | | – | – | 3.50 |
| | | EEL Rank | | – | – | – |
| | Design Load | | kW | 12.7 | 12.7 | – |
| | Declared Capacity | at reference design temperature | kW | 11.2 (-10°C) | 11.2 (-10°C) | – |
| | | at bivalent temperature | kW | 11.2 (-7°C) | 11.2 (-7°C) | – |
| | | at operation limit temperature | kW | 9.3 (-25°C) | 9.3 (-25°C) | – |
| | Back Up Heating Capacity | | kW | 1.5 | 1.5 | – |
| | Annual Electricity Consumption*2 | | kWh/a | 4420 | 4420 | – |
| | SCOP | | | 4.0 | 4.0 | – |
| | | Energy Efficiency Class | | A+ | A+ | – |
| Operating Current (max) | | | A | 35.5 | 13.5 | 13.5 |
| Indoor Unit | Input | Rated | kW | 0.07 | 0.07 | 0.08 |
| | Operating Current (max) | | A | 0.47 | 0.47 | 0.52 |
| | Dimensions <Panel> | H × W × D | mm | 298-840-840 <40-950-950> | | |
| | Weight <Panel> | | kg | 26 <5> | 26 <5> | 26 <5> |
| | Air Volume [Lo-Mi2-Mi1-Hi] | | $m^3$/min | 19 - 22 - 25 - 28 | 19 - 22 - 25 - 28 | 21 - 24 - 26 - 29 |
| | Sound Level (SPL) [Lo-Mi2-Mi1-Hi] | | dB(A) | 31 - 34 - 37 - 40 | 31 - 34 - 37 - 40 | 33 - 36 - 39 - 41 |
| | Sound Level (PWL) | | dB(A) | 61 | 61 | 62 |
| Outdoor Unit | Dimensions | H × W × D | mm | 1350 - 950 - 330 (+30) | | |
| | Weight | | kg | 120 | 134 | 134 |
| | Air Volume | Cooling | $m^3$/min | 100 | 100 | 100 |
| | | Heating | $m^3$/min | 100 | 100 | 100 |
| | Sound Level (SPL) | Cooling | dB(A) | 51 | 51 | 51 |
| | | Heating | dB(A) | 52 | 52 | 52 |
| | Sound Level (PWL) | Cooling | dB(A) | 69 | 69 | 69 |
| | Operating Current (max) | | A | 35 | 13 | 13 |
| | Breaker Size | | A | 40 | 16 | 16 |
| Ext. Piping | Diameter | Liquid / Gas | mm | 9.52 / 15.88 | 9.52 / 15.88 | 9.52 / 15.88 |
| | Max. Length | Out-In | m | 75 | 75 | 75 |
| | Max. Height | Out-In | m | 30 | 30 | 30 |
| Guaranteed Operating Range [Outdoor] | | Cooling*3 | °C | –15 ~ +46 | –15 ~ +46 | –15 ~ +46 |
| | | Heating | °C | –25 ~ +21 | –25 ~ +21 | –25 ~ +21 |

*1 Refrigerant leakage contributes to climate change. Refrigerant with lower global warming potential (GWP) would contribute less to global warming than a refrigerant with higher GWP, if leaked to the atmosphere. This appliance contains a refrigerant fluid with a GWP equal to 1975. This means that if 1kg of this refrigerant fluid would be leaked to the atmosphere, the impact on global warming would be 1975 times higher than 1kg of $CO_2$, over a period of 100 years. Never try to interfere with the refrigerant circuit yourself or disassemble the product yourself and always ask a professional.
*2 Energy consumption based on standard test results. Actual energy consumption will depend on how the appliance is used and where it is located.
*3 Optional air protection guide is required where ambient temperature is lower than –5°C.

# PLZ-SHW SERIES

DC Inverter · Vector Sine Wave · DC Scroll · Rare Earth Magnet · DC Fan Motor · Vector+Wave · PAM · Power Receiver · Grooved Piping · ZUBADAN

## Indoor Unit

R410A

PLA-M100/125EA

### Panel

| Panel | With Signal Receiver | With 3D i-see Sensor | With Wireless Remote Controller | With Auto Elevation |
|---|---|---|---|---|
| PLP-6EA | | | | |
| PLP-6EAL | ✓ | | | |
| PLP-6EAE | | ✓ | | |
| PLP-6EALE | ✓ | ✓ | | |
| PLP-6EAJ | ✓ | | | ✓ |
| PLP-6EAJE | ✓ | ✓ | | ✓ |
| PLP-6EALM | ✓ | | ✓ | |
| PLP-6EALME | ✓ | ✓ | ✓ | |

## Outdoor Unit

R410A

PUHZ-SHW112VHA(-BS)
PUHZ-SHW112/140YHA(-BS)

## Remote Controller

Enclosed in
PLP-6EALM/PLP-6EALME

*optional

*optional

*optional

i-see Sensor (Optional) · Demand Control (Optional 100/125) · Pure White · AUTO VANE · Fresh-air Intake · High-efficiency (Optional) · Long Life · Check! · SWING · High Ceiling · Low Ceiling · AUTO · ACO · Auto Restart · Low Temp Cooling

Silent · Ampere Limit · Rotation Back-up (Optional) · (Optional) · Group Control · M-NET connection (Optional) · Wi-Fi Interface (Optional) · COMPO · Cleaning-free pipe route · Wiring Reuse (Optional) · Drain Lift Up · Pump Down · Flare connection · Self Diagnosis · Failure Recall

| Type | | | | Inverter Heat Pump | | |
|---|---|---|---|---|---|---|
| Indoor Unit | | | | PLA-M100EA | | PLA-M125EA |
| Outdoor Unit | | | | PUHZ-SHW112VHA | PUHZ-SHW112YHA | PUHZ-SHW140YHA |
| Refrigerant | | | | R410A*1 | | |
| Power Supply | Source | | | Outdoor power supply | | |
| | Outdoor (V/Phase/Hz) | | | 230 / 1 / 50 | 400 / 3 / 50 | 400 / 3 / 50 |
| Cooling | Capacity | Rated | kW | 10.0 | 10.0 | 12.5 |
| | | Min - Max | kW | 4.9 - 11.4 | 4.9 - 11.4 | 5.5 - 14.0 |
| | Total Input | Rated | kW | 2.940 | 2.940 | 5.000 |
| | EER | | | – | – | 2.50 |
| | | EEL Rank | | – | – | – |
| | Design Load | | kW | 10.0 | 10.0 | – |
| | Annual Electricity Consumption*2 | | kWh/a | 661 | 661 | – |
| | SEER | | | 5.3 | 5.3 | – |
| | | Energy Efficiency Class | | A | A | – |
| Heating (Average Season) | Capacity | Rated | kW | 11.2 | 11.2 | 14.0 |
| | | Min - Max | kW | 4.5 - 14.0 | 4.5 - 14.0 | 5.0 - 16.0 |
| | Total Input | Rated | kW | 2.793 | 2.793 | 4.000 |
| | COP | | | – | – | 3.50 |
| | | EEL Rank | | – | – | – |
| | Design Load | | kW | 12.7 | 12.7 | – |
| | Declared Capacity | at reference design temperature | kW | 11.2 (-10°C) | 11.2 (-10°C) | – |
| | | at bivalent temperature | kW | 11.2 (-7°C) | 11.2 (-7°C) | – |
| | | at operation limit temperature | kW | 9.3 (-25°C) | 9.3 (-25°C) | – |
| | Back Up Heating Capacity | | kW | 1.5 | 1.5 | – |
| | Annual Electricity Consumption*2 | | kWh/a | 4445 | 4445 | – |
| | SCOP | | | 4.0 | 4.0 | – |
| | | Energy Efficiency Class | | A+ | A+ | – |
| Operating Current (max) | | | A | 35.5 | 13.5 | 13.7 |
| Indoor Unit | Input | Rated | kW | 0.07 | 0.07 | 0.08 |
| | Operating Current (max) | | A | 0.46 | 0.46 | 0.66 |
| | Dimensions <Panel> | H × W × D | mm | 298-840-840 <40-950-950> | | |
| | Weight <Panel> | | kg | 24 <5> | 24 <5> | 26 <5> |
| | Air Volume [Lo-Mi2-Mi1-Hi] | | $m^3$/min | 19 - 23 - 26 - 29 | 19 - 23 - 26 - 29 | 21 - 25 - 28 - 31 |
| | Sound Level (SPL) [Lo-Mi2-Mi1-Hi] | | dB(A) | 31 - 34 - 37 - 40 | 31 - 34 - 37 - 40 | 33 - 37 - 41 - 44 |
| | Sound Level (PWL) | | dB(A) | 61 | 61 | 65 |
| Outdoor Unit | Dimensions | H × W × D | mm | 1350 - 950 - 330 (+30) | | |
| | Weight | | kg | 120 | 134 | 134 |
| | Air Volume | Cooling | $m^3$/min | 100 | 100 | 100 |
| | | Heating | $m^3$/min | 100 | 100 | 100 |
| | Sound Level (SPL) | Cooling | dB(A) | 51 | 51 | 51 |
| | | Heating | dB(A) | 52 | 52 | 52 |
| | Sound Level (PWL) | Cooling | dB(A) | 69 | 69 | 69 |
| | Operating Current (max) | | A | 35 | 13 | 13 |
| | Breaker Size | | A | 40 | 16 | 16 |
| Ext. Piping | Diameter | Liquid / Gas | mm | 9.52 / 15.88 | 9.52 / 15.88 | 9.52 / 15.88 |
| | Max. Length | Out-In | m | 75 | 75 | 75 |
| | Max. Height | Out-In | m | 30 | 30 | 30 |
| Guaranteed Operating Range [Outdoor] | | Cooling*3 | °C | –15 ~ +46 | –15 ~ +46 | –15 ~ +46 |
| | | Heating | °C | –25 ~ +21 | –25 ~ +21 | –25 ~ +21 |

*1 Refrigerant leakage contributes to climate change. Refrigerant with lower global warming potential (GWP) would contribute less to global warming than a refrigerant with higher GWP, if leaked to the atmosphere. This appliance contains a refrigerant fluid with a GWP equal to 1975. This means that if 1kg of this refrigerant fluid would be leaked to the atmosphere, the impact on global warming would be 1975 times higher than 1kg of $CO_2$, over a period of 100 years. Never try to interfere with the refrigerant circuit yourself or disassemble the product yourself and always ask a professional.
*2 Energy consumption based on standard test results. Actual energy consumption will depend on how the appliance is used and where it is located.
*3 Optional air protection guide is required where ambient temperature is lower than –5°C.

# PEDZ-SHW JA SERIES

DC Inverter · Vector Sine Wave · DC Scroll · Rare Earth Magnet · DC Fan Motor · Vector-Wave · PAM · Power Receiver · Grooved Piping · ZUBADAN

## Indoor Unit

R32
R410A

PEAD-M100/125JA(L)

## Outdoor Unit

R410A

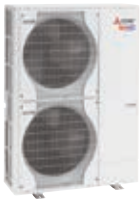

PUHZ-SHW112VHA(-BS)
PUHZ-SHW112/140YHA(-BS)

## Remote Controller

*optional

*optional

*optional

*optional

Demand Control (Optional) · Long Life · Check! · AUTO · ACO · Auto Restart · Low Temp Cooling · Silent · Ampere Limit (100/125) · Rotation Back-up (Optional) · (Optional) · Group Control · M-NET connection (Optional) · Wi-Fi Interface (Optional) · COMPO · Cleaning free, pipe route

Wiring Reuse (Optional) · Drain Lift Up (JAQ) · Pump Down · Flare connection · Self Diagnosis · Failure Recall

| Type | | | | Inverter Heat Pump | | |
|---|---|---|---|---|---|---|
| Indoor Unit | | | | PEAD-M100JA(L) | | PEAD-M125JA(L) |
| Outdoor Unit | | | | PUHZ-SHW112VHA(-BS) | PUHZ-SHW112YHA(-BS) | PUHZ-SHW140YHA(-BS) |
| Refrigerant | | | | R410A*1 | | |
| Power Supply | Source | | | Outdoor power supply | | |
| | Outdoor (V/Phase/Hz) | | | VHA:230 / Single / 50, YHA:400 / Three / 50 | | |
| Cooling | Capacity | Rated | kW | 10.0 | 10.0 | 12.5 |
| | | Min - Max | kW | 4.9 - 11.4 | 4.9 - 11.4 | 5.5 - 14.0 |
| | Total Input | Rated | kW | 2.924 (2.904) | 2.924 (2.904) | 3.895 (3.875) |
| | EER | | | – | – | 3.21 (3.22) |
| | | EEL Rank | | – | – | – |
| | Design Load | | kW | 10.0 | 10.0 | – |
| | Annual Electricity Consumption*2 | | kWh/a | 729 (714) | 729 (714) | – |
| | SEER | | | 4.8 (4.9) | 4.8 (4.9) | – |
| | | Energy Efficiency Class | | B | B | – |
| Heating (Average Season) | Capacity | Rated | kW | 11.2 | 11.2 | 14.0 |
| | | Min - Max | kW | 4.5 - 14.0 | 4.5 - 14.0 | 5.0 - 16.0 |
| | Total Input | Rated | kW | 3.103 | 3.103 | 3.879 |
| | COP | | | – | – | 3.61 |
| | | EEL Rank | | – | – | – |
| | Design Load | | kW | 12.7 | 12.7 | – |
| | Declared Capacity | at reference design temperature | kW | 11.2 | 11.2 | – |
| | | at bivalent temperature | kW | 11.2 | 11.2 | – |
| | | at operation limit temperature | kW | 9.4 | 9.4 | – |
| | Back Up Heating Capacity | | kW | 1.5 | 1.5 | – |
| | Annual Electricity Consumption*2 | | kWh/a | 4664 | 4664 | – |
| | SCOP | | | 3.8 | 3.8 | – |
| | | Energy Efficiency Class | | A | A | – |
| Operating Current (max) | | | A | 37.7 | 15.7 | 15.8 |
| Indoor Unit | Input [Cooling / Heating] | Rated | kW | 0.25 (0.23) / 0.23 | 0.25 (0.23) / 0.23 | 0.36 (0.34) / 0.34 |
| | Operating Current (max) | | A | 2.65 | 2.65 | 2.76 |
| | Dimensions | H × W × D | mm | 250 - 1400 - 732 | | |
| | Weight | | kg | 41 (40) | 41 (40) | 43 (42) |
| | Air Volume [Lo-Mid-Hi] | | $m^3$/min | 24.0 - 29.0 - 34.0 | 24.0 - 29.0 - 34.0 | 29.5 - 35.5 - 42.0 |
| | External Static Pressure | | Pa | 35 / 50 / 70 / 100 / 150 | 35 / 50 / 70 / 100 / 150 | 35 / 50 / 70 / 100 / 150 |
| | Sound Level (SPL) [Lo-Mid-Hi] | | dB(A) | 29 - 34 - 38 | 29 - 34 - 38 | 33 - 36 - 40 |
| | Sound Level (PWL) | | dB(A) | 61 | 61 | 65 |
| Outdoor Unit | Dimensions | H × W × D | mm | 1350 - 950 - 330 (+30) | | |
| | Weight | | kg | 120 | 134 | 134 |
| | Air Volume | Cooling | $m^3$/min | 100.0 | 100.0 | 100.0 |
| | | Heating | $m^3$/min | 100.0 | 100.0 | 100.0 |
| | Sound Level (SPL) | Cooling | dB(A) | 51 | 51 | 51 |
| | | Heating | dB(A) | 52 | 52 | 52 |
| | Sound Level (PWL) | Cooling | dB(A) | 69 | 69 | 69 |
| | Operating Current (max) | | A | 35.0 | 13.0 | 13.0 |
| | Breaker Size | | A | 40 | 16 | 16 |
| Ext. Piping | Diameter | Liquid / Gas | mm | 9.52 / 15.88 | 9.52 / 15.88 | 9.52 / 15.88 |
| | Max. Length | Out-In | m | 75 | 75 | 75 |
| | Max. Height | Out-In | m | 30 | 30 | 30 |
| Guaranteed Operating Range [Outdoor] | | Cooling*3 | °C | –15 ~ +46 | –15 ~ +46 | –15 ~ +46 |
| | | Heating | °C | –25 ~ +21 | –25 ~ +21 | –25 ~ +21 |

*1 Refrigerant leakage contributes to climate change. Refrigerant with lower global warming potential (GWP) would contribute less to global warming than a refrigerant with higher GWP, if leaked to the atmosphere. This appliance contains a refrigerant fluid with a GWP equal to 1975. This means that if 1 kg of this refrigerant fluid would be leaked to the atmosphere, the impact on global warming would be 1975 times higher than 1 kg of $CO_2$, over a period of 100 years. Never try to interfere with the refrigerant circuit yourself or disassemble the product yourself and always ask a professional.
*2 Energy consumption based on standard test results. Actual energy consumption will depend on how the appliance is used and where it is located.
*3 Optional air protection guide is required where ambient temperature is lower than –5°C.

# PKZ-SHW SERIES

DC Inverter | Vector Sine Wave | DC Scroll | Rare Earth Magnet | DC Fan Motor | Vector-Wave | PAM | Power Receiver | Grooved Piping | ZUBADAN

## Indoor Unit

R32
R410A

PKA-M100KA(L)

## Outdoor Unit

R410A

PUHZ-SHW112VHA(-BS)
PUHZ-SHW112/140YHA(-BS)

## Remote Controller

*optional

*optional

*optional

Demand Control (Optional) | Pure White | AUTO VANE | Check! (Optional) | SWING | AUTO | ACO | Auto Restart | Low Temp Cooling | Silent | Ampere Limit | Rotation Back-up (Optional) | (Optional) | Group Control (Optional) | M-NET connection (Optional) | Wi-Fi Interface (Optional)

COMPO | Cleaning-free pipe reuse | Wiring Reuse (Optional) | Drain Lift Up (Optional) | Pump Down | Flare connection | Self Diagnosis | Failure Recall

| Type | | | | Inverter Heat Pump | |
|---|---|---|---|---|---|
| Indoor Unit | | | | PKA-M100KA(L) | |
| Outdoor Unit | | | | PUHZ-SHW112VHA(-BS) | PUHZ-SHW112YHA(-BS) |
| Refrigerant | | | | R410A*1 | |
| Power Supply | Source | | | Outdoor power supply | |
| | Outdoor (V/Phase/Hz) | | | VHA:230 / Single / 50, YHA:400 / Three / 50 | |
| Cooling | Capacity | Rated | kW | 10.0 | 10.0 |
| | | Min - Max | kW | 4.9 - 11.4 | 4.9 - 11.4 |
| | Total Input | Rated | kW | 2.924 | 2.924 |
| | Design Load | | kW | 10.0 | 10.0 |
| | Annual Electricity Consumption*2 | | kWh/a | 673 | 673 |
| | SEER | | | 5.2 | 5.2 |
| | | Energy Efficiency Class | | A | A |
| Heating (Average Season) | Capacity | Rated | kW | 11.2 | 11.2 |
| | | Min - Max | kW | 4.5 - 14.0 | 4.5 - 14.0 |
| | Total Input | Rated | kW | 3.103 | 3.103 |
| | Design Load | | kW | 12.7 | 12.7 |
| | Declared Capacity | at reference design temperature | kW | 11.2 | 11.2 |
| | | at bivalent temperature | kW | 11.2 | 11.2 |
| | | at operation limit temperature | kW | 9.4 | 9.4 |
| | Back Up Heating Capacity | | kW | 1.5 | 1.5 |
| | Annual Electricity Consumption*2 | | kWh/a | 4664 | 4664 |
| | SCOP | | | 3.8 | 3.8 |
| | | Energy Efficiency Class | | A | A |
| Operating Current (max) | | | A | 35.6 | 13.6 |
| Indoor Unit | Input | Rated | kW | 0.08 | 0.08 |
| | Operating Current (max) | | A | 0.57 | 0.57 |
| | Dimensions <Panel> | H × W × D | mm | 365 - 1170 - 295 | |
| | Weight <Panel> | | kg | 21 | 21 |
| | Air Volume [Lo-Mid-Hi] | | $m^3$/min | 20 - 23 - 26 | 20 - 23 - 26 |
| | Sound Level (SPL) [Lo-Mid-Hi] | | dB(A) | 41 - 45 - 49 | 41 - 45 - 49 |
| | Sound Level (PWL) | | dB(A) | 65 | 65 |
| Outdoor Unit | Dimensions | H × W × D | mm | 1350 - 950 - 330 (+30) | |
| | Weight | | kg | 120 | 134 |
| | Air Volume | Cooling | $m^3$/min | 100.0 | 100.0 |
| | | Heating | $m^3$/min | 100.0 | 100.0 |
| | Sound Level (SPL) | Cooling | dB(A) | 51 | 51 |
| | | Heating | dB(A) | 52 | 52 |
| | Sound Level (PWL) | Cooling | dB(A) | 69 | 69 |
| | Operating Current (max) | | A | 35.0 | 13.0 |
| | Breaker Size | | A | 40 | 16 |
| Ext. Piping | Diameter | Liquid / Gas | mm | 9.52 / 15.88 | 9.52 / 15.88 |
| | Max. Length | Out-In | m | 75 | 75 |
| | Max. Height | Out-In | m | 30 | 30 |
| Guaranteed Operating Range [Outdoor] | | Cooling*3 | °C | –15 ~ +46 | –15 ~ +46 |
| | | Heating | °C | –25 ~ +21 | –25 ~ +21 |

*1 Refrigerant leakage contributes to climate change. Refrigerant with lower global warming potential (GWP) would contribute less to global warming than a refrigerant with higher GWP, if leaked to the atmosphere. This appliance contains a refrigerant fluid with a GWP equal to 1975. This means that if 1 kg of this refrigerant fluid would be leaked to the atmosphere, the impact on global warming would be 1975 times higher than 1 kg of $CO_2$, over a period of 100 years. Never try to interfere with the refrigerant circuit yourself or disassemble the product yourself and always ask a professional.
*2 Energy consumption based on standard test results. Actual energy consumption will depend on how the appliance is used and where it is located.
*3 Optional air protection guide is required where ambient temperature is lower than –5°C.

# MXZ-VFHZ
# MXZ-VAHZ SERIES

New hyper-heating MXZ allows you to create an oasis of comfort throughout your home and office in the rooms you use most, any time of the year.

## Standard rated heating capacity is maintained even when the outside-air temperature drops to –15°C.

Maintains high capacity output even when outside-air temperature is low.

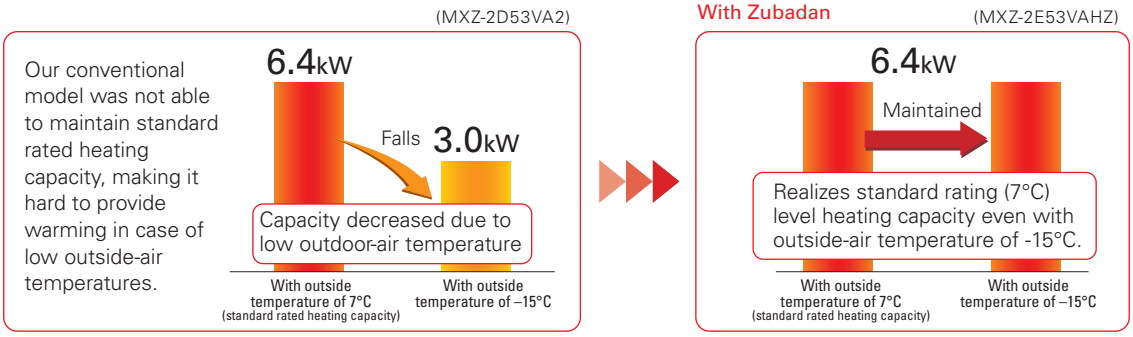


## Can operate at outside-air temperature of –25°C

1. Incorporated key parts resistant to cold of up to –25°C after rigorous selection.
2. Printed circuit board-core of the air conditioner—is coated on both sides to protect it in harsh environments.

## Freeze-prevention heater standard equipment

Prevents capacity loss and operation from stopping due to drain water freezing.

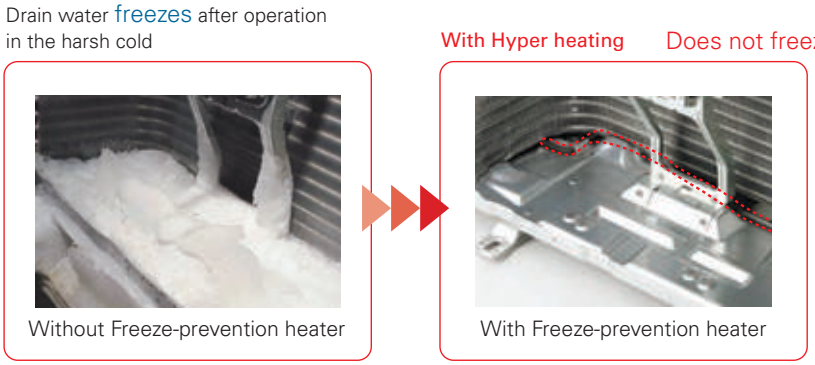


## Continuous heating for long periods

Wasteful defrosting operation suppressed to enable more comfortable long-term continuous heating.

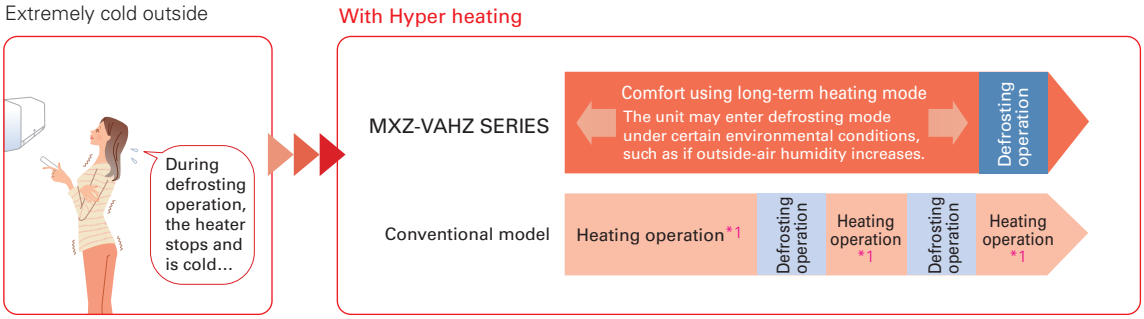


*1: Conventional model performs continuous heating approximately 30min up to a maximum of 90min.

## One outdoor unit supports multiple indoor units.

With MXZ-VAHZ, one outdoor unit can cool and heat up to six rooms. They can be installed neatly in sites with limited space such as condominium balconies.

*Please note that cooling and heating modes cannot be run simultaneously in different rooms.

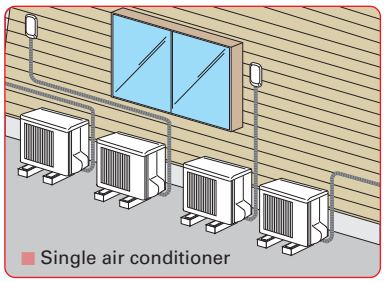


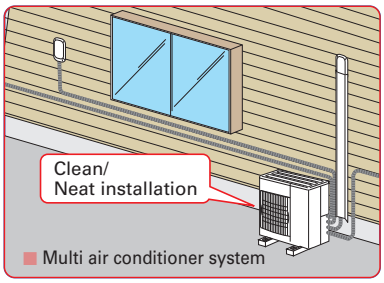


EXAMPLE SYSTEM

MXZ-4E83VAHZ system

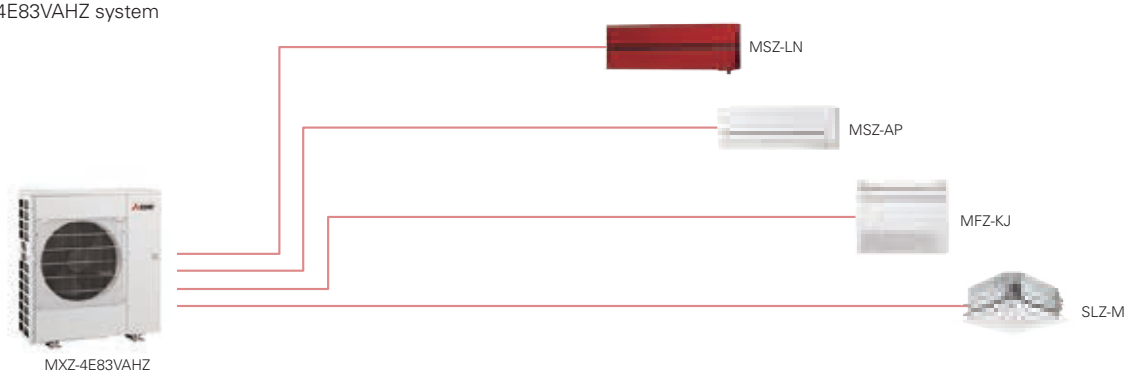


## Freedom of combinations in cold region greatly enhanced

The variety of indoor unit connection options in cold regions, restricted until now, has been greatly increased.
Increased design freedom.

### OUTDOOR UNITS

**2-room use**

R32

MXZ-2F53VFHZ

R410A

MXZ-2E53VAHZ

**4-room use**

R32

MXZ-4F83VFHZ

R410A

MXZ-4E83VAHZ

### INDOOR UNITS

**Wall-mounted**

R32 R410A

MSZ-LN

R32 R410A

MSZ-AP

R32



MSZ-FT

R410A

MSZ-SF

R32 R410A

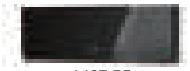

MSZ-EF

R410A

MSZ-GF

**Floor-standing**

R32

MFZ-KT

R410A

MFZ-KJ

**Cassette**

R32 R410A

SLZ

R32 R410A

MLZ-KP

R32 R410A

*1

PLA

**Ceiling-suspended**

R32 R410A

*1

PCA

**Ceiling-concealed**

R32 R410A

SEZ

R32 R410A

*1

PEAD

*1: P series cannot be connect with MXZ-4E83VAHZ when ampere limit adjustment function is operated.

# MXZ-VFHZ SERIES

## Outdoor Unit

R32

MXZ-2F53VFHZ

R32

MXZ-4F83VFHZ

| Type | | | | Inverter Heat Pump | |
|---|---|---|---|---|---|
| Indoor Unit | | | | Please refer to*4 *5 | |
| Outdoor Unit | | | | MXZ-2F53VFHZ | MXZ-4F83VFHZ |
| Refrigerant | | | | R32**1 | |
| **Power Supply** | **Source** | | | Outdoor power supply | |
| | **Outdoor (V/Phase/Hz)** | | | 220 - 230 - 240V / Single / 50 | |
| **Cooling** | **Capacity** | Rated | kW | 5.3 | 8.3 |
| | | Min - Max | kW | 1.1 - 6.0 | 3.5 - 9.2 |
| | **Total Input** | Rated | kW | 1.29 | 1.90 |
| | **Design Load** | | kW | 5.3 | 8.3 |
| | **Annual Electricity Consumption***2 | | kWh/a | 274 | 398 |
| | **SEER***4 | | | 6.8 | 7.3 |
| | | **Energy Efficiency Class***4 | | A++ | A++ |
| **Heating (Average Season)** | **Capacity** | Rated (7°C) | kW | 6.4 | 9.0 |
| | | Rated (–7°C) | kW | 6.4 | 9.0 |
| | | Rated (–15°C) | kW | 6.4 | 9.0 |
| | | Min - Max | kW | 1.0 - 7.0 | 3.5 - 11.6 |
| | **Total Input** | Rated | kW | 1.36 | 1.70 |
| | **Design Load** | | kW | 6.4 | 8.3 |
| | **Declared Capacity** | at reference design temperature | kW | 6.9 | 10.6 |
| | | at bivalent temperature | kW | 7.4 | 11.5 |
| | | at operation limit temperature | kW | 4.1 | 5.7 |
| | **Back Up Heating Capacity** | | kW | 0.0 | 1.1 |
| | **Annual Electricity Consumption***2 | | kWh/a | 2172 | 3286 |
| | **SCOP** | | | 4.1 | 4.3 |
| | | **Energy Efficiency Class***4 | | A+ | A+ |
| **Max. Operating Current (Indoor+Outdoor)** | | | A | 15.6 | 28.0 |
| **Outdoor Unit** | **Dimensions** | H × W × D | mm | 796 × 950 × 330 | 1048 × 950 × 330 |
| | **Weight** | | kg | 61 | 86 |
| | **Air Volume** | Cooling | $m^3$/min | 63.0 | 63.0 |
| | | Heating | $m^3$/min | 47.0 | 77.0 |
| | **Sound Level (SPL)** | Cooling | dB(A) | 45 | 55 |
| | | Heating | dB(A) | 47 | 57 |
| | **Sound Level (PWL)** | Cooling | dB(A) | 55 | 66 |
| | **Breaker Size** | | A | 16 | 30 |
| **Ext. Piping** | **Diameter** | Liquid / Gas | mm | 6.35 × 2 / 9.52 × 2 | 6.35× 4 / 12.7 × 1+9.52× 3 |
| | **Total Piping Length (max)** | | m | 30 | 70 |
| | **Each Indoor Unit Piping Length (max)** | | m | 20 | 25 |
| | **Max. Height** | | m | 15 (10) *3 | 15 (10) *3 |
| | **Chargeless Length** | | m | 30 | 70 |
| **Guaranteed Operating Range** [Outdoor] | | Cooling | °C | –10 ~ +46 | –10 ~ +46 |
| | | Heating | °C | –25 ~ +24 | –25 ~ +24 |

*1 Refrigerant leakage contributes to climate change. Refrigerant with lower global warming potential (GWP) would contribute less to global warming than a refrigerant with higher GWP, if leaked to the atmosphere. This appliance contains a refrigerant fluid with a GWP equal to 2088. This means that if 1 kg of this refrigerant fluid would be leaked to the atmosphere, the impact on global warming would be 2088 times higher than 1 kg of $CO_2$ , over a period of 100 years. Never try to interfere with the refrigerant circuit yourself or disassemble the product yourself and always ask a professional.
*2 Energy consumption based on standard test results.
Actual energy consumption will depend on how the appliance is used and where it is located.
*3 If the outdoor unit is installed higher than the indoor unit, max. height is reduced to 10m.
*4 EER/COP, EEL rank, SEER/SCOP values and energy efficiency class are measured when connected to the indoor units listed below.
MXZ-2E53VAHZ MSZ-EF18VE + MSZ-EF35VE
MXZ-4E83VAHZ MSZ-EF18VE + MSZ-EF18VE + MSZ-EF22VE + MSZ-EF25VE
*5 Indoor unit compatibility table is shown on page 114.

# MXZ-VAHZ SERIES

## Outdoor Unit

R410A

MXZ-2E53VAHZ

R410A

MXZ-4E83VAHZ

| Type | | | | Inverter Heat Pump | |
|---|---|---|---|---|---|
| Indoor Unit | | | | Please refer to*4 *5 | |
| Outdoor Unit | | | | MXZ-2E53VAHZ | MXZ-4E83VAHZ |
| Refrigerant | | | | R410A*1 | |
| **Power Supply** | **Source** | | | Outdoor power supply | |
| | **Outdoor (V/Phase/Hz)** | | | 220 - 230 - 240V / Single / 50 | |
| **Cooling** | **Capacity** | Rated | kW | 5.3 | 8.3 |
| | | Min - Max | kW | 1.1 - 6.0 | 3.5 - 9.2 |
| | **Total Input** | Rated | kW | 1.29 | 2.25 |
| | **Design Load** | | kW | 5.3 | 8.3 |
| | **Annual Electricity Consumption*2** | | kWh/a | 282 | 447 |
| | **SEER*4** | | | 6.5 | 6.5 |
| | | **Energy Efficiency Class*4** | | A++ | A++ |
| **Heating (Average Season)** | **Capacity** | Rated (7°C) | kW | 6.4 | 9.0 |
| | | Rated (–7°C) | kW | 6.4 | 9.0 |
| | | Rated (–15°C) | kW | 6.4 | 9.0 |
| | | Min - Max | kW | 1.0 - 7.0 | 3.5 - 11.6 |
| | **Total Input** | Rated | kW | 1.36 | 1.90 |
| | **Design Load** | | kW | 6.4 | 10.1 |
| | **Declared Capacity** | at reference design temperature | kW | 6.4 | 9.0 |
| | | at bivalent temperature | kW | 6.4 | 9.0 |
| | | at operation limit temperature | kW | 2.4 | 2.5 |
| | **Back Up Heating Capacity** | | kW | 0.0 | 1.1 |
| | **Annual Electricity Consumption*2** | | kWh/a | 2165 | 3446 |
| | **SCOP** | | | 4.1 | 4.1 |
| | | **Energy Efficiency Class*4** | | A+ | A+ |
| **Max. Operating Current (Indoor+Outdoor)** | | | A | 15.6 | 28.0 |
| **Outdoor Unit** | **Dimensions** | H × W × D | mm | 796 × 950 × 330 | 1048 × 950 × 330 |
| | **Weight** | | kg | 61 | 87 |
| | **Air Volume** | Cooling | $m^3$/min | 47.0 | 63.0 |
| | | Heating | $m^3$/min | 47.0 | 77.0 |
| | **Sound Level (SPL)** | Cooling | dB(A) | 45 | 53 |
| | | Heating | dB(A) | 47 | 57 |
| | **Sound Level (PWL)** | Cooling | dB(A) | 55 | 66 |
| | **Breaker Size** | | A | 16 | 30 |
| **Ext. Piping** | **Diameter** | Liquid / Gas | mm | 6.35 × 2 / 9.52 × 2 | 6.35× 4 / 12.7 × 1+9.52× 3 |
| | **Total Piping Length (max)** | | m | 30 | 70 |
| | **Each Indoor Unit Piping Length (max)** | | m | 20 | 25 |
| | **Max. Height** | | m | 15 (10) *3 | 15 (10) *3 |
| | **Chargeless Length** | | m | 20 | 25 |
| **Guaranteed Operating Range** [Outdoor] | | Cooling | ℃ | –10 ~ +46 | –10 ~ +46 |
| | | Heating | ℃ | –25 ~ +24 | –25 ~ +24 |

*1 Refrigerant leakage contributes to climate change. Refrigerant with lower global warming potential (GWP) would contribute less to global warming than a refrigerant with higher GWP, if leaked to the atmosphere. This appliance contains a refrigerant fluid with a GWP equal to 2088. This means that if 1 kg of this refrigerant fluid would be leaked to the atmosphere, the impact on global warming would be 2088 times higher than 1 kg of $CO_2$ , over a period of 100 years. Never try to interfere with the refrigerant circuit yourself or disassemble the product yourself and always ask a professional.
*2 Energy consumption based on standard test results.
Actual energy consumption will depend on how the appliance is used and where it is located.
*3 If the outdoor unit is installed higher than the indoor unit, max. height is reduced to 10m.
*4 EER/COP, EEL rank, SEER/SCOP values and energy efficiency class are measured when connected to the indoor units listed below.
MXZ-2E53VAHZ MSZ-EF18VE + MSZ-EF35VE
MXZ-4E83VAHZ MSZ-EF18VE + MSZ-EF18VE + MSZ-EF22VE + MSZ-EF25VE
*5 Indoor unit compatibility table is shown on page 114.

To ensure full capacity in cold and snowy regions...

# 3 Important Points to Remember When Installing the Outdoor Unit

✻RAC/PAC (inc. Air to Water) /MXZ

**Wind and snow can significantly reduce capacity.**
**Be sure to check the infomation below and install the outdoor unit correctly.**

## 1 Installation Location

Be aware of the prevailing wind direction in winter and install the outdoor unit where it is as sheltered as possible.

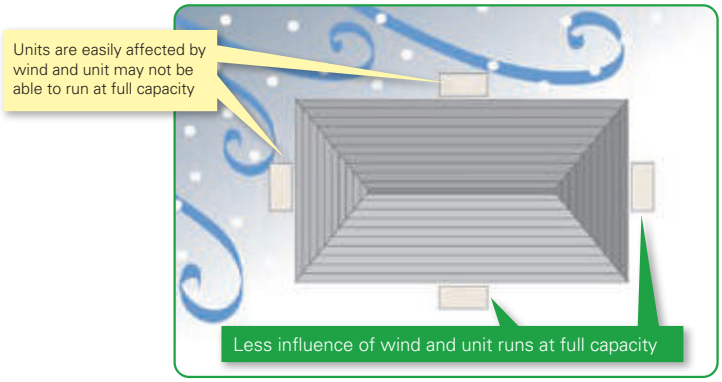


## 2 Measures for Drainage of Water

### Case 1: Unit is installed close to passage (walkway)

Do not install the unit close to passage as drainage water from the unit may freeze and cause a slipping hazard.

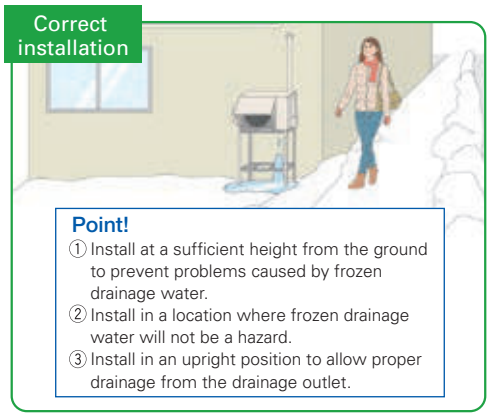


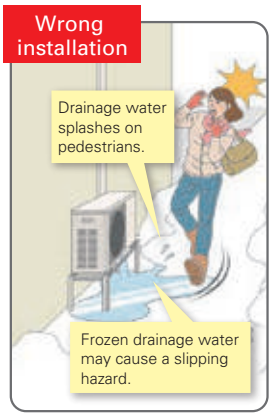


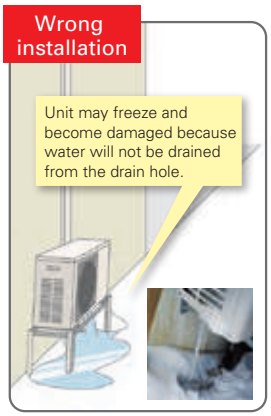


### Case 2: Multiple units are installed

Do not install units on top of one another as it may cause frozen drainage water on the bottom unit.

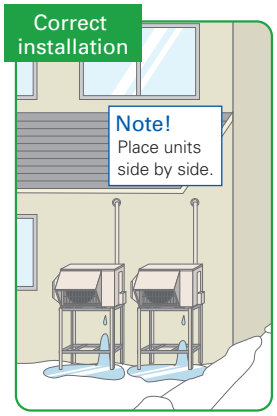


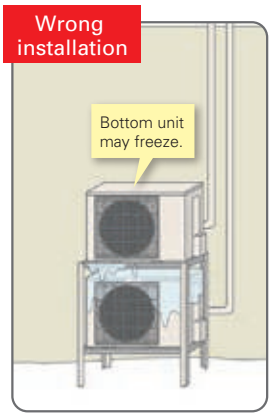

# 3 Measures for Snow

## Unit is installed on the ground

To avoid the adverse effects of snow and frozen drainage water, install the unit on a stand to ensure a sufficient height from the ground.

[RAC / PAC / MXZ]

**Correct installation**

**Point!**

① Install at a position/height to prevent the unit being buried in snow *1 and the adverse effects of frozen drainage water.*2

② Install so as to avoid the effects of snow or snowdrift.

③ Install so as to avoid the damage from falling snow or icicles.

*1 Install at a height above the highest snowfall depth.

*2 Even for correct installations, dripping drainage water may form an icicle which needs to be cleared away regularly to prevent a blocked drainage outlet.

**Wrong installation**

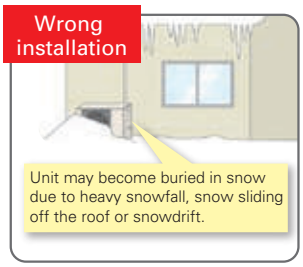

Unit may become buried in snow due to heavy snowfall, snow sliding off the roof or snowdrift.

**Wrong installation**

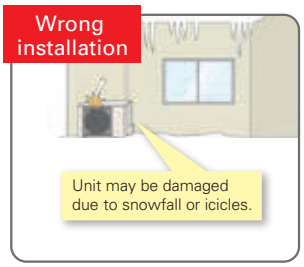

Unit may be damaged due to snowfall or icicles.

Use a stand to add sufficient height to protect the unit heat exchanger from snow and prevent icicles forming during defrost operation.

**Correct installation**

Minimum height (h) should be higher than the highest snowfall depth (h0)

**+20cm**

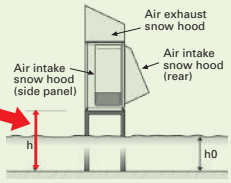


**Wrong installation**

Unit may become covered in snow if the stand height is insufficient.

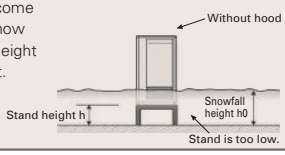


## Install snow protection hood as necessary

[RAC / PAC / MXZ]

**Correct installation**

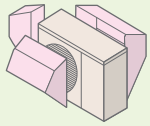

**Point!**

Install the snow protection hood or other cover in snowy regions.

## Necessity of accessories (drain socket & centralised drain pan, stand, snow protection hood, base heater)

| | Snowy region | Cold region | Remarks |
|---|---|---|---|
| | Countermeasures for snow | Countermeasures for freezing | |
| Drain socket, Centralised drain pan | Not used | Not used | Prevents freezing |
| Stand | Needed | Needed | [RAC / PAC / MXZ]<br>1. Install so as to prevent the unit being buried in snow (at a height greater than the highest snowfall depth). Be sure that the stand does not obstruct drainage.<br>2. Install so as to prevent damage to the unit due to frozen drainage water (icicles).<br>Clearance to prevent snow accumulating.<br><Correct> 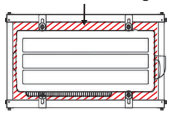 |
| Snow protection hood | Needed<br>*When the installation position is subject to snowfall. | — | 1. Prevents heat exchanger from being covered in snow.<br>2. Prevents snow accumulating inside the air duct. |
| Base heater | — | Needed | [RAC / PAC / MXZ]<br>Outdoor units equipped with a heater for cold regions are those with an "H" in the model name. For the cold-climate zone, use of a unit with a heater is strongly recommended. Even for the moderate-climate zone use of a unit with a heater is recommended for regions subject to high humidity in winter. |

## ⚠ CAUTION About disposal of drainage water

When the unit is installed in cold or snowy regions :

**Drainage water may freeze in the drain socket/hose and prevent the fan from rotating.**

▶ **Do not attach a drain socket packaged as an accessory to the unit.**

✻ In the case that fitting a drain socket is absolutely necessary, steps must be taken so that the drainage water does not freeze.
For more information, please consult Mitsubishi Electric or one of its dealers/resellers.

| | |
|---|---|
| Arrangement for snow protection hood | [RAC / PAC / MXZ]<br>Separately sold parts are available for some models.<br>Please consult Mitsubishi Electric or one of its dealers/resellers at the time of purchase for details. |

# AIR TO WATER

ecodan
Renewable Heating Technology

# SELECTION

Choose the series that best matches the building layout.

## Excellent ecodan's heating performance, even at low outdoor temperature!

R32

### INDOOR UNIT

Hydro box, cylinder unit

### OUTDOOR UNIT

| Packaged type | Small capacity (Under 5kW)* | Medium capacity (6.0kW–11.2kW)* |
|---|---|---|
| POWER INVERTER | PUZ-WM50 | PUZ-WM60/85/112 |

| Split type | Small capacity (Under 5kW)* | Medium capacity (6.0kW–14kW)* |
|---|---|---|
| ZUBADAN New Generation | | PUD-SHWM60/80/100/120/140 |
| POWER INVERTER | | PUD-SWM60/80/100/120 |
| Eco Inverter | SUZ-SWM40/60 | SUZ-SWM80 |

*Rated capacity is at conditions A2W35. (according to EN14511)

R410A

### INDOOR UNIT

Hydro box, cylinder unit

### OUTDOOR UNIT

| Split type | Medium capacity (7.5kW–14kW)* | | Large capacity (≧16kW)* |
|---|---|---|---|
| ZUBADAN New Generation | PUHZ-SHW80/112 | PUHZ-SHW140 | PUHZ-SHW230 |
| POWER INVERTER | PUHZ-SW75/100 | PUHZ-SW120 | PUHZ-SW160/200 |

*Rated capacity is at conditions A2W35. (according to EN14511)

| Other ATW-related system | Mr.SLIM+ | PUMY + ecodan | ecodan geodan |
|---|---|---|---|
| | R410A PUHZ-FRP71 | R410A PUMY-P112/125/140 | R32 EHGT17D-YM9ED |

# New Eco-design Directive

## What is the ErP Directive?

The Eco-design Directive for Energy-related Products (ErP Directive) established a framework to set mandatory standards for ErPs sold in the European Union (EU). The ErP Directive introduces new energy efficiency ratings across various product categories. It affects how products such as computers, vacuum cleaners, boilers and even windows are classified in terms of environmental performance. Labelling regulations that apply to our ATW heat pumps came into effect from September 26, 2015, and then revised from September 26, 2019.

### New energy label and measurements

Under directive 2009/125/EC, ATW heat pumps of up to 70kW are required to show their heating efficiency on the energy label. The purpose of the energy label is to inform customers about the energy efficiency of a heating unit. The efficiency for space heating is ranked from A+++ to D (from September 2019). In the case of domestic hot water, it is from A+ to F (from September 2019).

#### Product label

This label is for individual heating units, such as an ecodan heat pump. Typically, the space heater label is used for ecodan systems with a hydro box, and the combination heater label is used for ecodan systems with a cylinder unit.

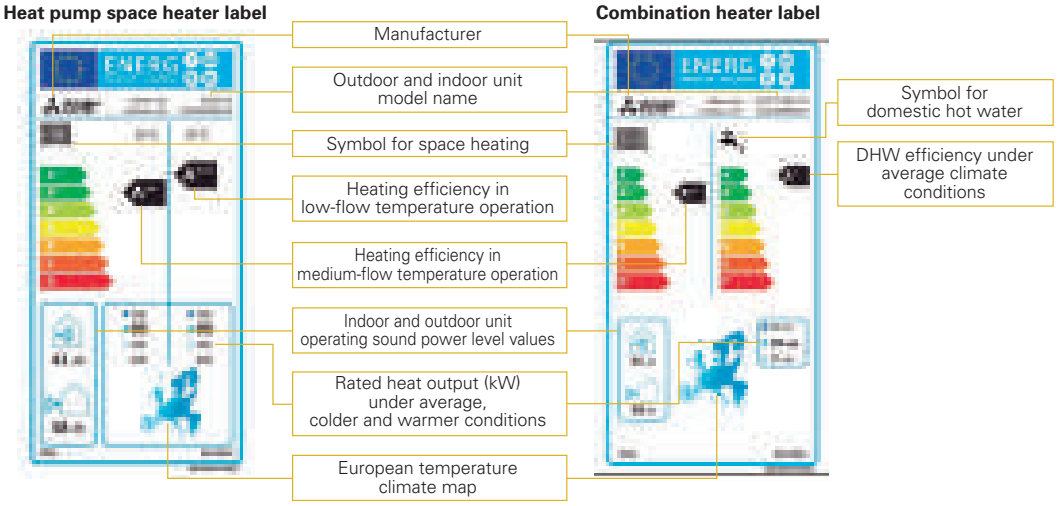


These labels are delivered with all ecodan outdoor units.

### What is the package label?

A heating system can use several energy-related products, such as a controller or solar thermal system. Therefore, a label showing the efficiency of the total heating system is required. The category range is defined from A+++ to G.
Creating the package label is the responsibility of the installers and distributors. A useful tool on the Mitsubishi Electric website is available to easily create the labels for ecodan products and controllers.
http://erp.mitsubishielectric.eu/erp/options

#### Package label

This label is for heating systems that use several energy-related products, such as a controller or a solar thermal system.

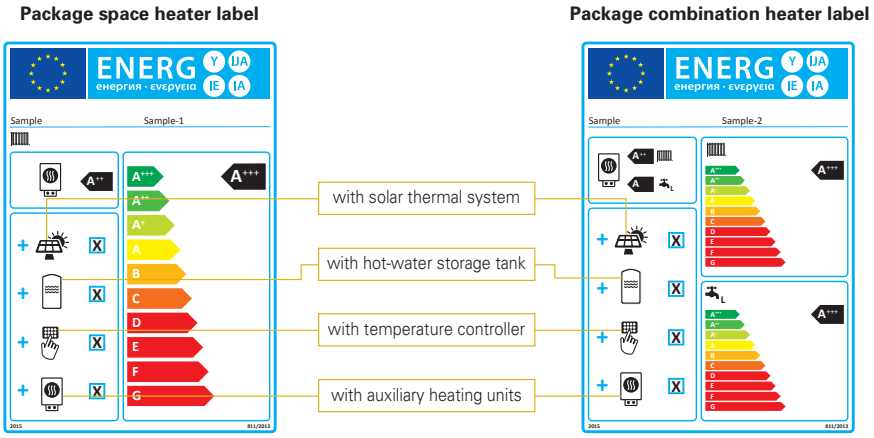


Customised package labels including ecodan heat pumps and the FTC6 controller can be created on the Mitsubishi Electric website.

# New R32 Eco Inverter Line-up

## Energy Efficient and Environmentally Friendly Heating

- Wide variety of product line with R32 refrigerant
- More energy efficient than conventional eco inverter models

## High Performance

All models have achieved the "RANK A+++" for SCOP at low temperature.

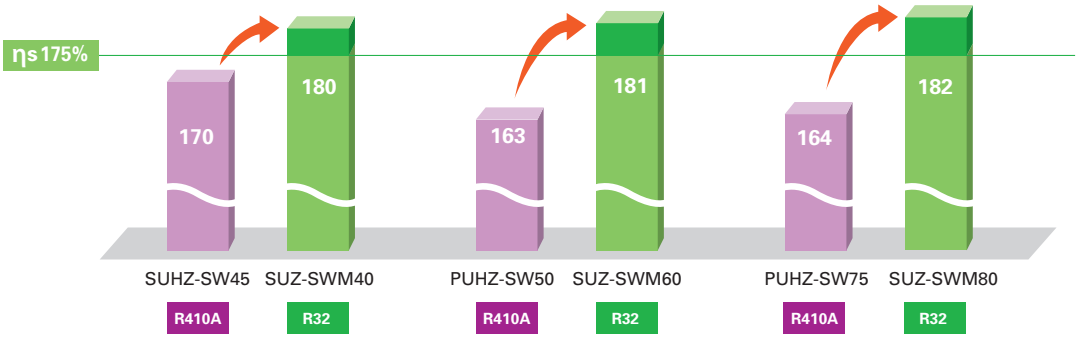


## Low Noise

Compared with conventional outdoor unit, New R32 eco inverter achieved lower noise level, assuring the flexibility of installation in dense residential areas.

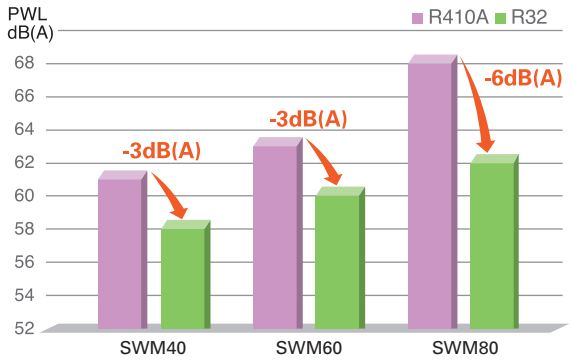


*Compared SUZ-SWM40/60/80VA with SUHZ-SW45VA/PUHZ-SW50VKA/PUHZ-SW75VHA
*Rated condition (According to EN12102)

## 60°C Flow Temperature

Along with it's increased lower operating range the New R32 range is capable of delivering a higher flow rate of 60°C, 5°C higher than the conventional model.

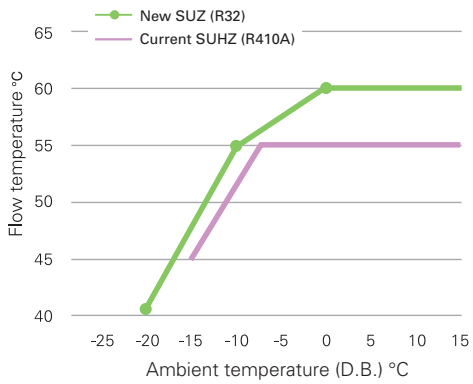


## Guaranteed Operating Range Expansion

Guaranteed heating operating range is extended to –20°C.

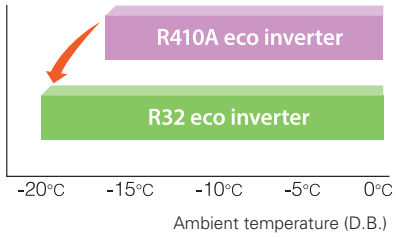


## Reducing Refrigerant Amount

**<R410A vs 32> $CO_2$ equivalent emission**

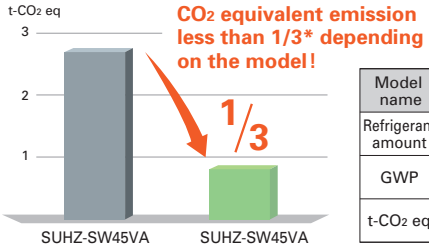


| Model name | SUHZ-SW45VA | SUZ-SW40VA |
|---|---|---|
| Refrigerant amount | 1.3kg | 1.2kg |
| GWP | 2088 (R410A) | 675 (R32) |
| t-$CO_2$ eq | 2.714 | 0.810 |

*Source: IPCC 4th Assessment Report, global warming potential (GWP) 100-year value. Comparison of 2088 (R410A) and 675 (R32).

# Dedicated Heat Pump for Residence

GOOD DESIGN

reddot award 2018 winner

## Stylish and Compact

### The Stylish Design and Compact Size Harmonises Residential Application

- Simple and elegant design by rounding left and right corners of the unit.
- Concealing the fan by matching the panel and the grille in dark colour.
- Unified shape and safety by setting the fan whole backwards and matching the grille on the same level of the front panel.
- Wider lineup with environmental-friendly R32 refrigerant.

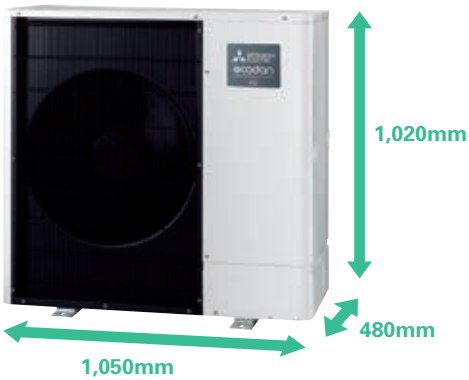


## High Performance

### New Compressor

- Compact
- High performance
- Flash injection*

*ZUBADAN (SHWM) only

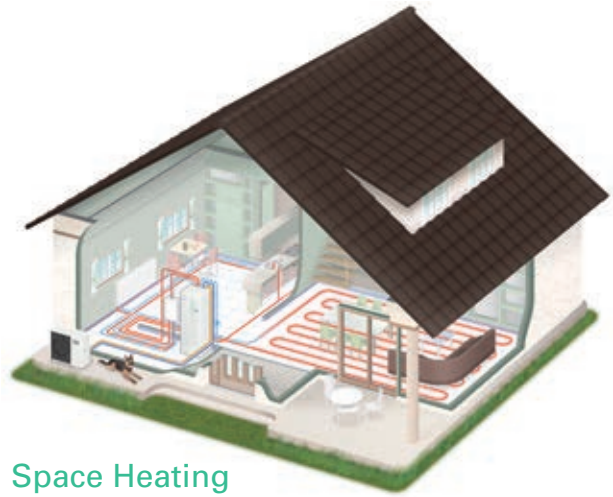

### ErP Lot 1 Compliant with Highest Seasonal Space Heating Energy Efficiency Class A+++

All models have achieved the "RANK A+++" for SCOP at low temperature.

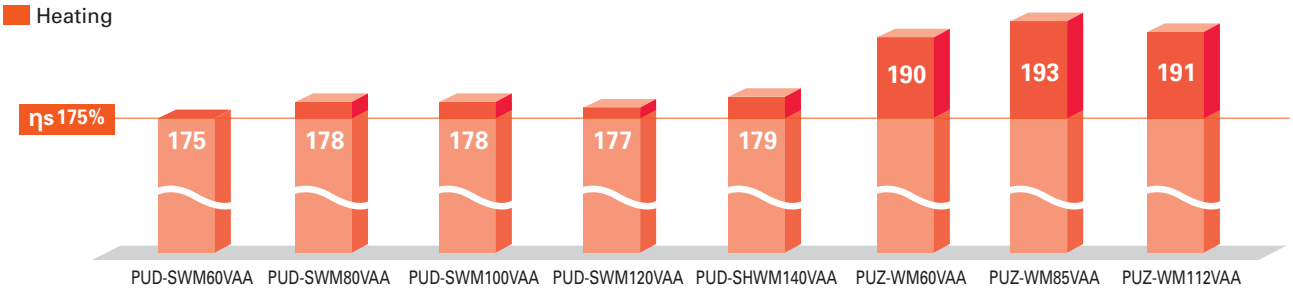


### 60°C Flow Temperature at Low Ambient Temperature

60°C max flow temprature can be maintained up to Ambient –7°C.
(For PUD-S(H)WM models)

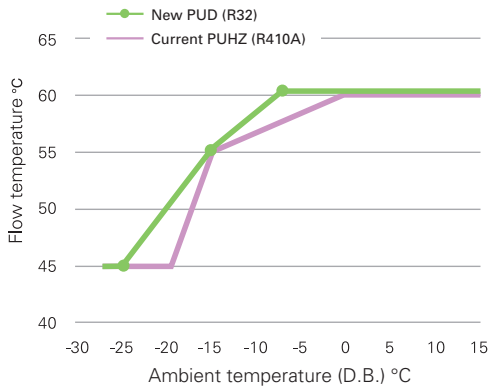


### Reducing Refrigerant Amount

**<R410A vs 32> $CO_2$ equivalent emission**

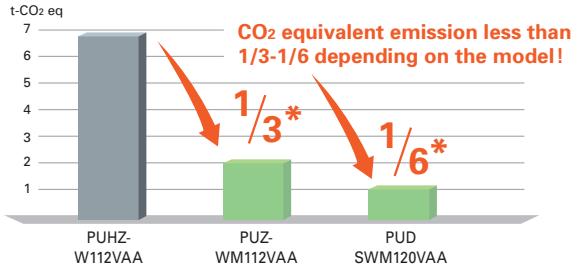


| Model name | PUHZ-W112VAA | PUZ-WM112VAA | PUD-SWM120VAA |
|---|---|---|---|
| Refrigerant amount | 3.3kg | 3.0kg | 1.6kg |
| GWP | 2088 (R410A) | 675 (R32) | 675 (R32) |
| t-$CO_2$ eq | 6.890 | 2.025 | 1.080 |

*Source: IPCC 4th Assessment Report, global warming potential (GWP) 100-year value. Comparison of 2088(R410A) and 675 (R32).

# Compact with Silence

## Noise Reduction-10dB(A)

Mitsubishi Electric heat pumps are designed to give you highly efficient and eco-friendly heating with 10dB(A) less in PWL.
Compared with conventional models.

*Rated condition (According to EN12102)

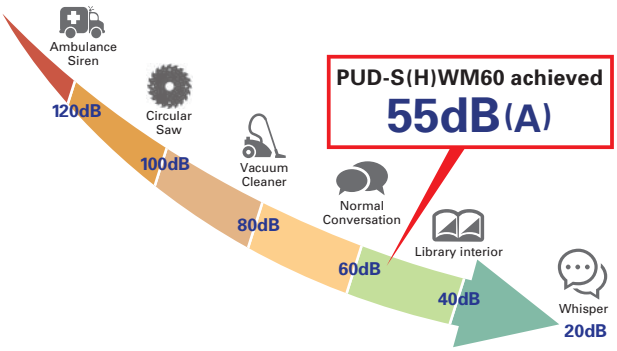


## Blowing Air

### To Reduce Fan Noise

- Optimising fan position
- Optimising bell mouth shape
- Bigger fan diameter

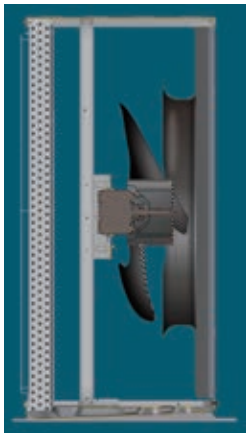

## Enclosing Noise

### Shutting Out Noise from Compressor

- The structure of double enclosing

Primary: enclosing a compressor (the structure is patented.)
Secondary: enclosing machine room.

## Avoiding Vibration and Resonance

- Dedicated soft rubber mount for the compressor to avoid vibration.
- Optimising piping structure to avoid vibration and resonance.

# New Control for Eco-friendly Heating

## Defrost Improvement

Conventional models often switch to defrost operation even when there is not much frost on outdoor units. By defecting frost more precisely, it is possible to prevent frequent on/off for defrosting and to give you more comfort.

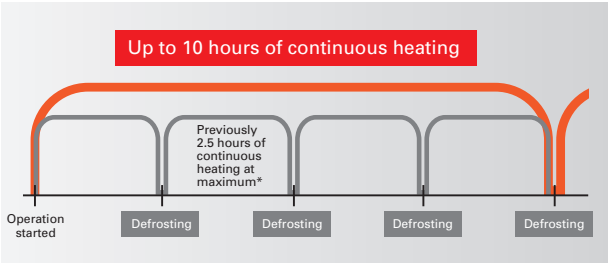


*Comparison between prior PUHZ-SHW·AA model and new PUD-S(H)WM·AA model.
Maximum number of operational hours at our Company's laboratory (external temperature –15°C).
Hours of continuous operation may differ depending on external temperature conditions.

## New Compressor Frequency Control

By reducing frequency changes (from 17 to 4 times per hour), hunting is prevented. Reducing fluctuation improves efficiency and prolongs compressor life.

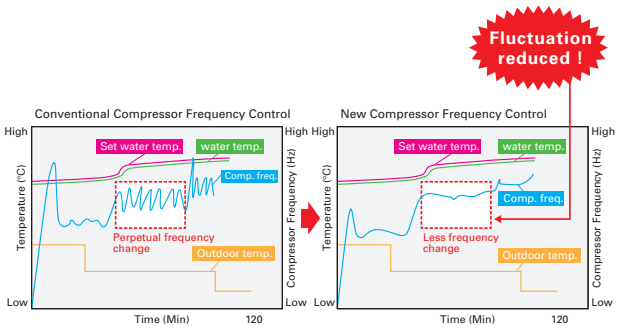

# New D generation Indoor Unit

## New All-in-one Compact Indoor Unit

- All-in-one: Key functional components are incorporated
- Compact cylinder unit: 1,400~2,050mm in height
- Compact hydro box: Only 530×360mm footprint
- Easy installation: Factory fitted pressure relief valve
- Easy service: Relevant parts are located at the front of the unit for easy maintenance
- Easy transport: Handles attached on front and back (cylinder unit)

**Hydro box (Split type)**

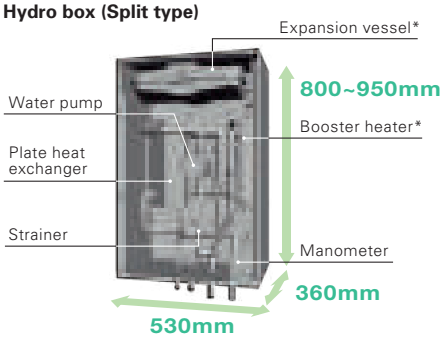


**Cylinder unit (Split type)**

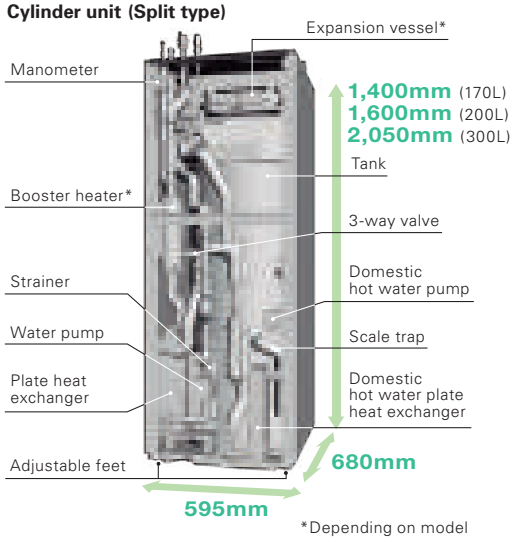


*Depending on model

# New Line-up

ecodan's line-up has many types of indoor units to satisfy diverse customers' needs, requests and local regulations.
It includes various capacity units, with/without booster heater, with/without an expansion vessel, etc.
In addition, a reversible hydro box and a reversible cylinder unit are available.

**Hydro box** **Cylinder unit**

### Available options

– Packaged or Split type
– With/without booster heater
– With/without expansion vessel
– Cylinder unit has an integrated 170L/200L/300L stainless steel tank
– Hydro box is control ready for domestic hot water with a stand-alone tank (locally supplied)

# New Reversible Models

(for heating/cooling)

## Perfect Comfort in Winter and Summer Time, Thanks to Our Reversible Models.

Reversible models are now available for both hydro box and cylinder units (Both for split type and cylinder unit for packaged type).
The new reversible cylinder is now able to produce cold water for cooling use and can alternatively produce domestic hot water in summer time.

**Reversible hydro box** **Reversible cylinder unit**

# Easy Installation and Low Maintenance

## Simple Piping Arrangement

All water piping is aligned at the rear side of the unit for easy connection and neat finish.

## Built-in Drain Pan for Reversibel Cylinder Models

Reversible models now include a built-in space saving drain pan and the drain socket is positioned at the back of the unit. With use of the adjuster bolt, the outlet height can be higher than 50mm, allowing 5m drainage.

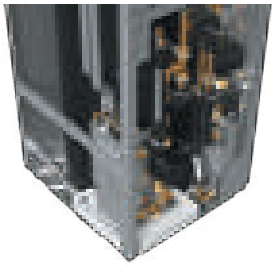

## Hydro Box Piping Arrangement Improvement

Through structural innovation related to the space around the pipes, the area where the spanner can be moved has been increased, thus improving pipe work and enabling it to be completed smoothly.

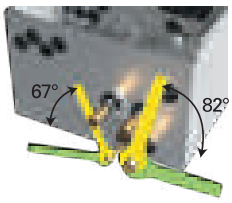


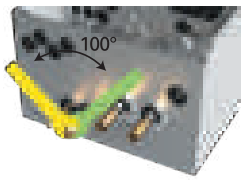


## Minimum Additional Water Required

In average/warmer conditions, minimum additional water is required for outdoor unit. If there is enough water amount inside water pipe, radiator, or underfloor heating no buffer tank is required.

*Refer to the indoor unit installation manual for specific outdoor unit models.

## Easy Adjustment

Adjust bolt capable of 50mm expansion for easy installation on uneven surfaces.

## Initial Setting Wizard

In addition to language, date and time, you can set up hot water and heating/cooling operation, pump speed, flow rate range initial setting much simpler than previous models.

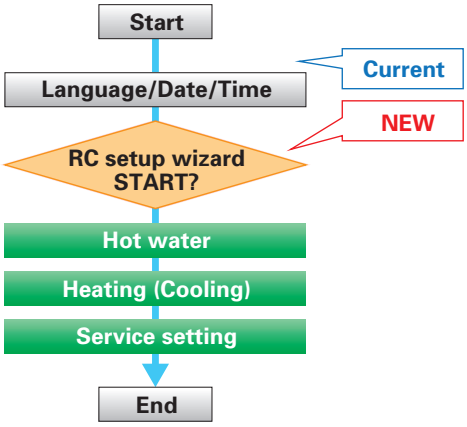


## Operation Data Monitoring

Time, operation mode, flow/return/tank temperature, can be displayed on main remote controller.

Sample display of monitoring setting

26 Feb 2019 10:00

| | THW1 | THW2 | THW5 | Flow |
|---|---|---|---|---|
| 10:00 | 41°C | 38°C | 54°C | 20L |
| 9:55 | 38°C | 38°C | 54°C | 20L |
| 9:50 | 48°C | 48°C | 54°C | 20L |
| 9:45 | 60°C | 56°C | 54°C | 15L |
| 9:40 | 59°C | 55°C | 52°C | 15L |

i ◀ ▶ (1/5)

## New 2 Zone Kit

- You can sellect from 3 types of pump operations, 1. Fixed speed mode, 2. Fixed pressure mode, 3. Energy saving mode, depending on your preference.

- All-in-one kit: Key functional components are incorporated in 2 zone kit.
- Easy installation: G1 screw type flexi-piping to avoid brazing.
- Compact size: Just to fit on the top of cylinder unit, also wall mountable.

# High Performance

## Improved Efficiency

With additional thermistor (THW5A), ηwh [%] rating is improved by more than 40% compared to previous C generation 200L models allowing 170L and 200L to achieve A+, the highest possible domestic hot water efficiency rank.

Excellent DHW efficiency

| | 170L | 200L | 300L |
|---|---|---|---|
| | ηwh [%] | ηwh [%] | ηwh [%] |
| Conventional | – | 96~104 | – |
| New | 120~148 | 135~159 | 118~128 |
| Load Profile | L | L | XL |
| DHW Rank | A+ | A+ | A/A+ |

## Thermistor Position of Cylinder

The thermistor position is now selectable allowing the unit to accommodate for different water demands in order to maximise the efficiency of the unit for any size of household or application.
Using two thermistors equipped with all sizes of tanks, you can now select the DHW recharge amount from two options (Standard/Large). It helps accomodate for different water demands in order to maximise the efficiency of the unit for any size of household or application. This mode can be selected from main remote controller.

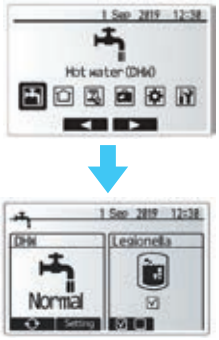


# Unique Technology of ecodan

Settings can be performed using an SD card.

*SD logo is a trademark of SD-3C, LLC

## Auto Adaptation

### Maximise Energy Savings While Retaining Comfort at All Times

Regarding the relation of flow temperature and unit performance, a 1°C drop in the flow temperature improves the coefficient of performance (COP) of the ATW system by 2%. This means that energy savings are dramatically affected by controlling the flow temperature in the system.

In a conventional system controller, the flow temperature is determined based on the pre-set heat curve depending on the actual outdoor temperature. However, this requires a complicated setting to achieve the optimal heat curve.

■ Heat curve setting (Example)

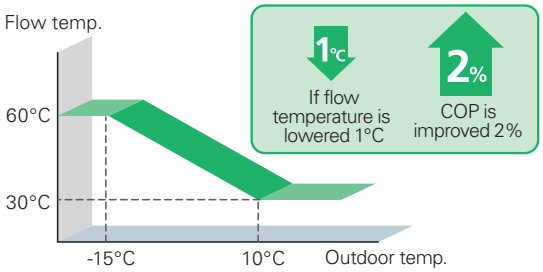


## Auto Adaptation Improvement

### Mitsubishi Electric's Auto Adaptation Function Automatically Tracks Changes in the Actual Room Temperature and Outdoor Temperature and Adjusts the Flow Temperatures Accordingly.

Aiming to realise further comfort and energy savings, Mitsubishi Electric has already introduced a revolutionary new controller. Auto Adaptation function measures the room temperature and outdoor temperature, and then calculates the required heating capacity for the room. Simply stated, the flow temperature is automatically controlled according to the required heating capacity, while optimal room temperature is maintained at all times, ensuring the appropriate heating capacity and preventing energy from being wasted.
Furthermore, by estimating future changes in room temperature, the system works to prevent unnecessary increases and decreases in the flow temperature. Accordingly, Auto Adaptation maximises both comfort and energy savings without the need for complicated settings.
For Mitsubishi Electric ecodan, by introducing improved control logic, we acheived faster heating and more energy saving.

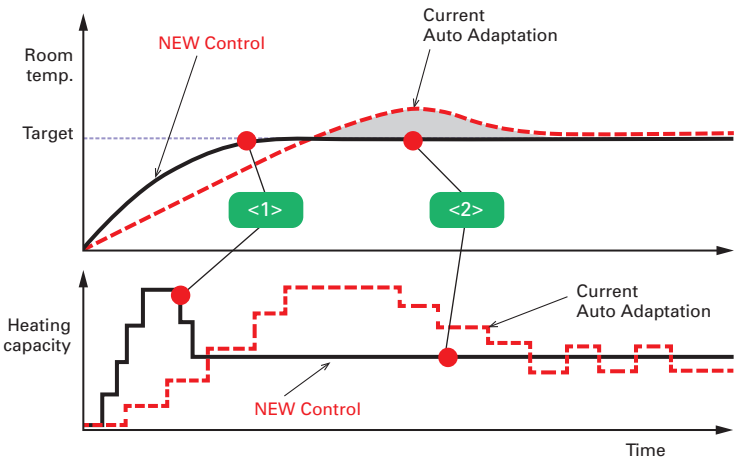


<1> Fast heating with improved accuracy in learning building heat load
<2> Energy saving by avoiding over heating and capacity fluctuation with better control response, i.e. control interval and resolution

# Smart Grid Ready Function

In recent years renewable energy generation has become popular. However, this rapid growing causes the problem of supply and demand gap of electricity. The aim of "SG Ready" is to make the electricity demand response more flexible by creating a uniform interface for the smart grid integration of heat pumps. Air-to-Water units need to be able to change the operation pattern when the signal is received from the Smart Grid Controller.
New ecodan Cylinder, Hydro box and FTC have been modified to communicate with Smart Grid Controller. The communication protocol is based on "SG Ready" label regulation. (Version 1.1; gültig ab 01.01.2013)

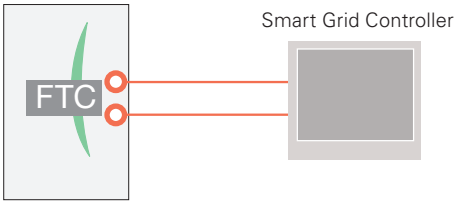


| Pattern | Input 1 | Input 2 | Operation | |
|---|---|---|---|---|
| 1 | OFF | OFF | Normal operation | |
| 2 | ON | OFF | Switch ON recommendation | SG |
| 3 | OFF | ON | Switch OFF command | |
| 4 | ON | ON | Switch ON command | |

**Pattern 1: Normal operation**
When there is no signal from the Smart Grid Controller, DHW and Heating operate according to user settings.

**Pattern 2: Switch ON recommendation**
When set to the "Switch ON" recommendation, the target temperature of DHW is increased a specified amount and the heating "Thermo ON" condition range is extended.

**Pattern 3: Switch OFF command**
When the "Switch OFF" command is received, both DHW and Heating are turned off.

**Pattern 4: Switch ON command**
When the "Switch ON" command is received, the target temperature of DHW is increased to the maximum target temperature and Heating continues.

# Improved Smart Grid Ready

SG ready icon on main remote controller indicates that SG ready is active and its setting can be easily operated with main remote controller. Improved SG ready function enables you to choose the target temperature in unit of 1°C. Also, when PV manager is interlocked with ecodan and ecodan receivers its signal, heat is stored as much as possible while heat pump and/or electric heater running.
Heat storage in large buffer tank will be made available for zone2 as well when peak cut signal is on. As long as a mixing valve keeps its control, zone2 flow temperature is maintained.

| Pattern | Operation | R/C indication |
|---|---|---|
| 1 | Normal operation | —— |
| 2 | Switch ON recommendation | SG |
| 3 | Switch OFF command | |
| 4 | Switch ON command (while PV is generating) | |

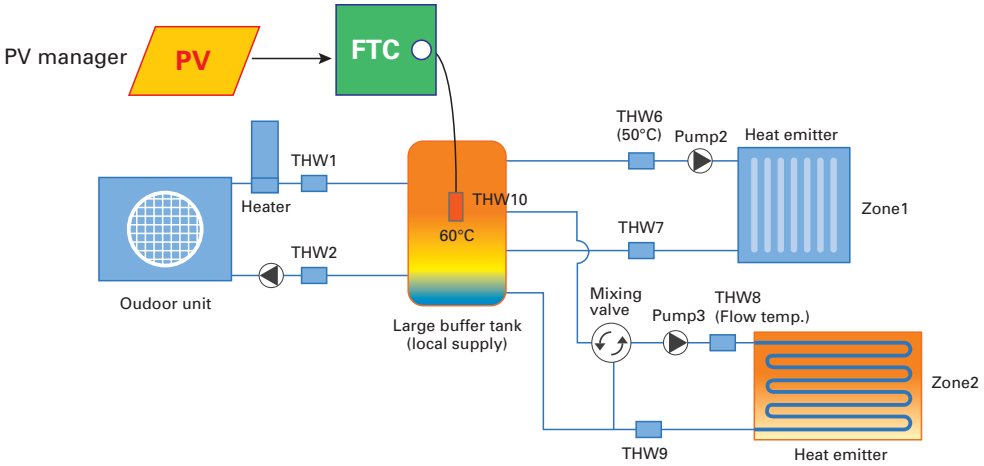

# Intelligent Hybrid Control (boiler interlock)

## An Existing Boiler Can Be Used for Extra Heating Capacity in an Efficient Way

Settings can be performed using an SD card.

*SD logo is a trademark of SD-3C, LLC

The flexibility of ecodan's intelligent control allows the system to be combined with the boiler currently in use. Additionally, this control can judge which heating source to use either ecodan or the existing boiler, based on various conditions*.
In the event of one heating unit not working due to some unforeseen problem, the other heating system can be used as a back-up, thereby preventing the heating system operation from stopping completely.

*Please see below "Heat source switchover".

## Intelligent system combining a boiler with ecodan

■ Intelligent boiler interlock system

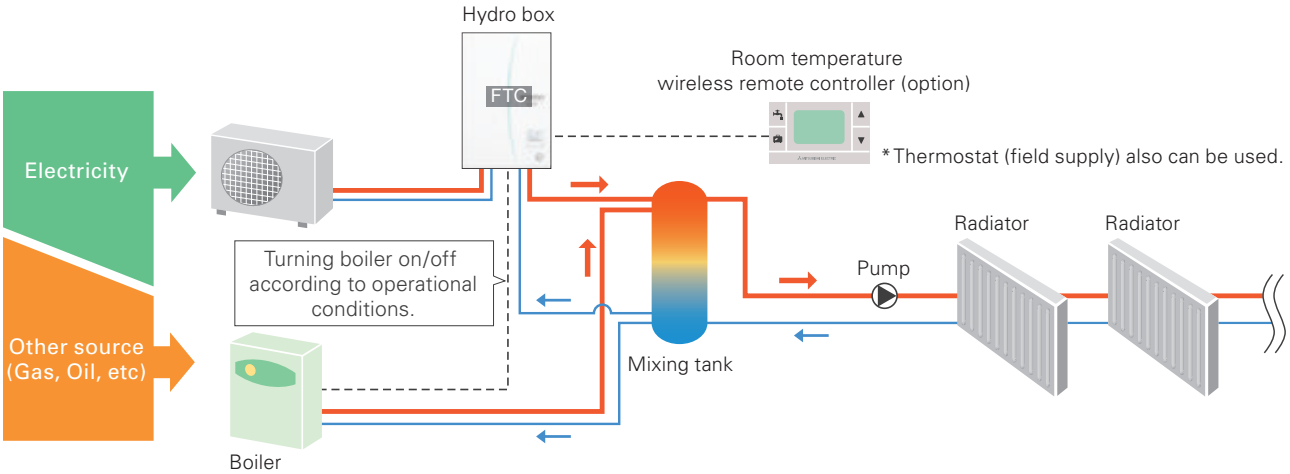


* Items such as a mixing tank, and pump are not included and need to be purchased locally.

## Heat source switchover - Choose appropriate system based on needs

### 4 types of heat source switchover logic

① Switchover based on actual outdoor temperature
- Heat source switchover occurs when the outdoor temperature drops below a pre-set temperature.

② Switchover based on running cost
- Heat source switchover occurs by judging optimal operation based on running cost.
  *Pre-registration of the energy price of electricity, and gas or oil per 1kWh is necessary.

③ Switchover based on $CO_2$ emission level
- Heat source switchover occurs to minimise $CO_2$ emission.
  *Pre-registration of $CO_2$ emission amount from electricity and gas or oil is necessary.

④ Switchover can also be activated via external input
- For example, the peak cut signal from electric power company.

Settings can be performed using an SD card.

*SD logo is a trademark of SD-3C, LLC

# 2 Zone Control (for heating/cooling)

## Improved Simultaneous Control of Two Different Zones

Using ecodan, it is possible to control two different flow temperatures, thereby managing two different heating load requirements. The system can adjust and maintain two flow temperatures when different temperatures are required for different rooms; for example, controlling a flow temperature of 40°C for the bedroom radiators and another flow temperature of 30°C for the living room floor heating.
Moreover, mixing valve control is advanced for improving zone 2 comfort by using heat storage in buffer tank. Also, new controller monitors the temperature inside buffer tank and prioritizes using the heat inside the tank to avoid frequent on/off operation when using 2 zone control.

■ Two temperature zones

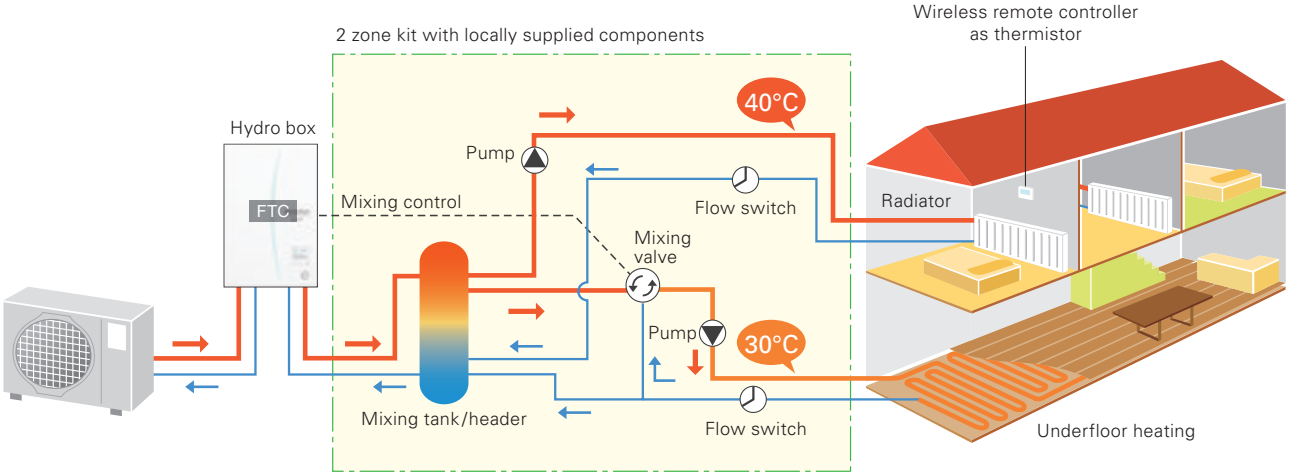


*Items such as a mixing tank, mixing valve flow switch and pumps are not included and need to be purchased locally.

# Multiple Unit Control

## Connect up to 6 Units – Automatic Control of Multiple Units for Bigger Capacity and Better Efficiency

A maximum of 6 units* can be configured according to the heating/cooling load of the building. The most efficient number of operating units is determined automatically based on heating/cooling load. This enables ecodan to provide optimal room temperature control, and thus superior comfort for room occupants. Also incorporated is a rotation function that enables each unit to run for an equal time period.
If one of the units malfunctions when using the Multiple Unit Control, another unit can be automatically operated for back-up, thereby preventing the system operation from stopping completely.

*Only same models (same capacity) can be used.

■ Multiple unit control

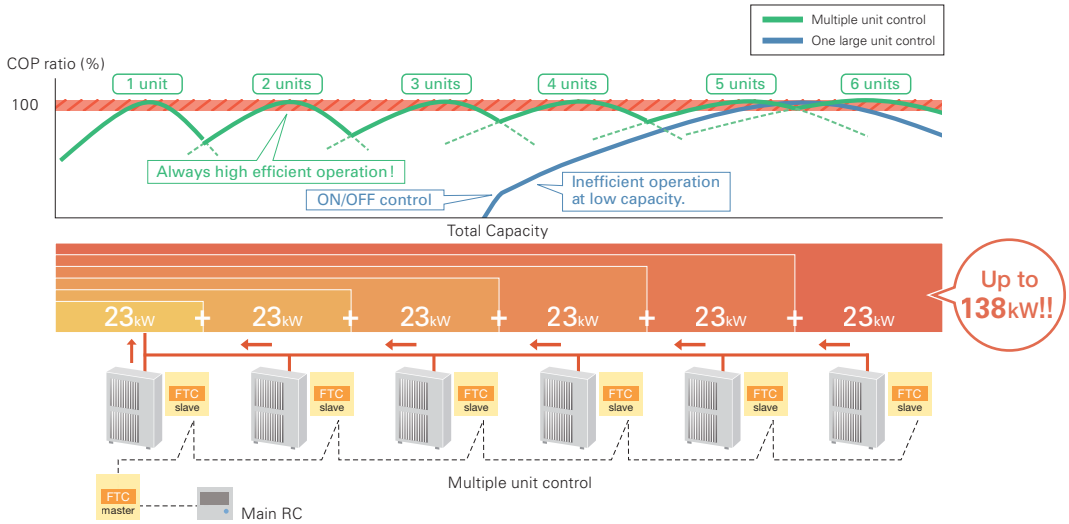

# Remote Controllers

## Smart User-friendly Controller with Stylish Design

### Main remote controller

- Large screen and backlight for excellent visibility, even in dark environment
- Multi-language support (supports 15 languages)
- Can be removed from main unit and installed in a remote location (up to 500m)
- Quick reading of operation data (7.5 times faster than previous model)
- Wide range of convenient functions in response to user demand

  Function settings

  – Energy monitoring
  – Two-zone control (cooling and heating)
  – Two separate schedules
  – Summer time setting
  – Built-in room temperature sensors
  – Hybrid control (boiler interlock)
  – Floor drying mode
  – Weekly timer
  – Holiday mode
  – Legionella prevention
  – Error codes

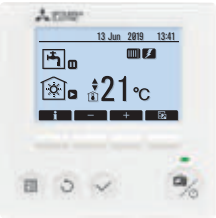

Main controller

PAR-WR51R-E (Option)
Receiver

### Wireless remote controller (optional)

- Built-in room temperature sensor; easy to place in the best position to detect room temperature
- Wiring work eliminated
- Simple design that is easy to operate
- Remote control from any room without needing to choose an installation location
- Backlight and big buttons that are easy to operate
- Domestic hot water boost and cancellation
- Simplified holiday mode

PAR-WT50R-E (Option)
Wireless remote controller

Settings can be performed using an SD card.

*SD logo is a trademark of SD-3C, LLC

# Energy Monitoring

## View Electricity Consumption and Heat Output on the Remote Controller

Every end user can now easily check the energy data of the ecodan heat pump.

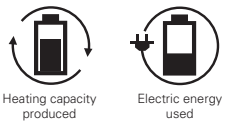


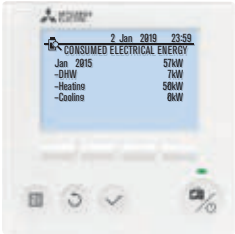


### Other features

– Daily, monthly and yearly data are stored and can be displayed using the main remote controller.
– External power meter and heat meter can be connected for accurate measurement.
– SD card is also available for storing data.

*Using pre-set values on the main remote controller, estimated energy consumption/output can be shown without external power and a heat meter.
Depending on operating condition and system configuration, there is some possibility to show different data from the reality.
*This function is available depending on the version of the outdoor unit model.

# Summer Time Setting

## Easy Adjustment for Summer Time

Just switch the summer time mode 'on' using the main remote controller and the clock in the main remote controller is adjusted to summer time hours.
This function can release the end user from clock setting tasks.

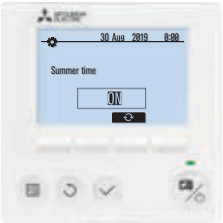


# Two Separate Schedules

## Pre-setting Two Different Schedules for Winter and Summer Seasons

Settings can be performed using an SD card.

*SD logo is a trademark of SD-3C, LLC

Two different schedule settings are available for use via the main remote controller.
These schedules can be pre-set and changed depending on the season.
For example, from November to March, space heating and domestic hot water are used; however, during warm months such as from April to October, only domestic hot water is used.

<Example>

**Schedule 1** Winter time
Space heating **daytime**
Domestic hot water **early morning**

**Schedule 2** Summer time
Domestic hot water **any time**

# Easy Commissioning

## Pump for Primary Water Circuit* Speed Setting Possible Using ecodan's Main Remote Controller

Even when the system is running, pump output can be set to one of five different settings using the main remote controller.
The person commissioning the system can adjust this speed much more easily.

*Speed setting of pump for domestic hot water is not available through the main remote controller when the system is running.

### Flow sensor newly incorporated

The flow sensor is key for monitoring energy output and can also be used to detect flow error as well.
– Flow rate can be checked on the main remote controller.
– Flow rate can also be shown as graphs using the SD card tool.

### Run indoor unit* without outdoor unit

During installation or situations such as an outdoor unit malfunction, the indoor unit can be operated using a heater.
While using this mode, flow and tank temperature are selectable.
Fixing and maintenance of the outdoor unit can be done without stopping heating and domestic hot water operation*.

*Models with electric heater only.
*When the indoor unit operation stops, please check all settings after the outdoor unit is connected.

# SD* Card

## For Easier Settings and Data Logging

Settings can be performed using an SD card.

*SD logo is a trademark of SD-3C, LLC

The initial setting for ecodan is now simpler than ever before. The special software enables the required initial settings to be saved to an SD card using a personal computer. The system set-up is as easy as moving the SD card from the computer to the SD card slot in the indoor unit. Compared to the previous procedure of inputting settings using the main controller at the installation site, a remarkable reduction in set-up time has been achieved. Thus, it is ideal for busy installers.

*SD card function is only used at the time of installation.

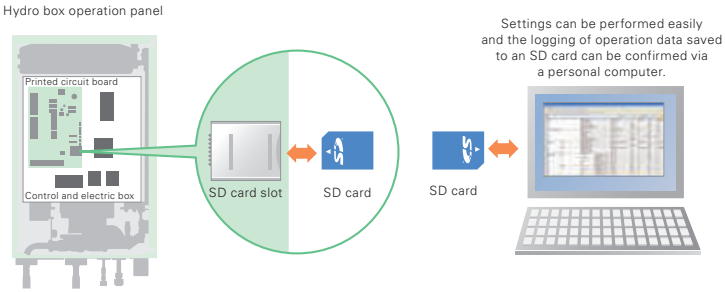


### Items that can be pre-set

**Simply copying pre-set data to an SD card, the same settings can input into another unit using the SD card.**

- Initial settings (time display, contact number, etc.)
- Heating settings
  - Auto adaptation
  - Heat curve
  - Two different temperature zones (heating and cooling)
- Interlocked boiler operation settings
- Holiday mode settings
- Schedule timer settings (two separate schedules)
- Domestic hot water settings
- Legionella prevention settings

All items that are set by the main controller can be set via a personal computer.

### Data that can be stored

**Operation data up to a month long can be stored on a single SD card**

- Consumed electrical energy
- Delivered energy
- Flow rate
- Operation time
- Defrost time
- Actual temperature
  - Room temperature
  - Flow temperature
  - Return temperature
  - Domestic hot water temperature
  - Outdoor temperature
- Error record
- Input signal
- Etc.

# ecodan geodan

## Excellent Performance with Mitsubishi Electric First Residential Ground Source Heat Pump

Ground source heat pump works best especially in replacement from old ground source heat pump.

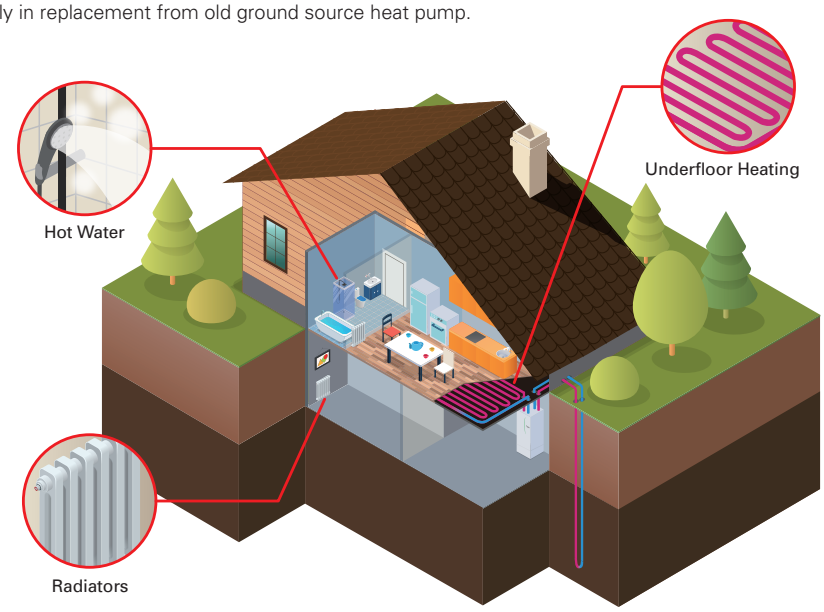


ecodan geodan

## Performance / Function

### High Performance

ErP Lot 1 Compliant with highest seasonal space heating energy efficiency class A+++.

Low GWP refrigerant R32 contributes the reduction of $CO_2$ emission compared with conventional R410A refrigerant.

### A+++ Class Energy Efficiency

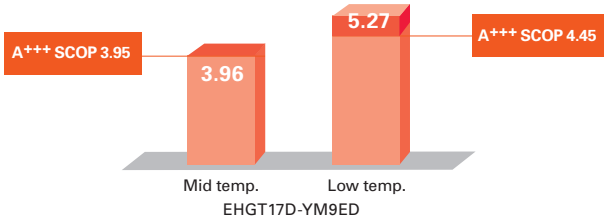


**<ATW vs GSHP> $CO_2$ equivalent emission**

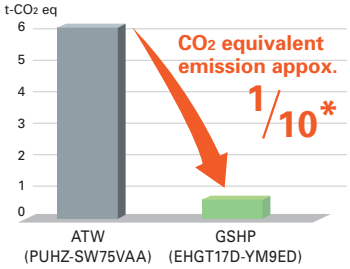


| Model name | PUHZ-SW75VAA | EHGT17D-YM9ED |
|---|---|---|
| Refrigerant amount | 3.0kg | 0.9kg |
| GWP | 2088 (R410A) | 675 (R32) |
| t-$CO_2$ eq | 6.264 | 0.608 |

*Source: IPCC 4th Assessment Report, global warming potential (GWP) 100-year value. Comparison of 2088(R410A) and 675 (R32).

### New Compressor Frequency Control

By reducing frequency changes (from 17 to 4 times per hour), hunting is prevented. Reducing fluctuation improves efficiency and prolongs compressor life.

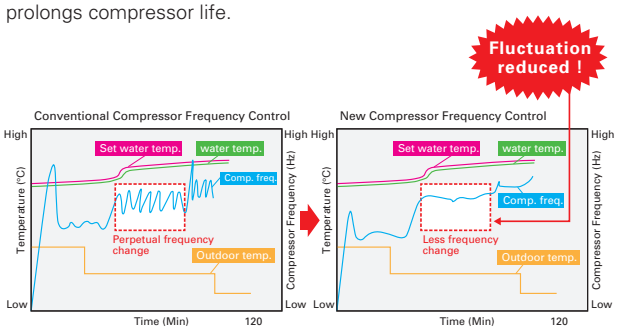


### Borehole Protection Control

When the unit detects low underground temperature, it automatically reduces the capacity by decreasing heat source collection in order to protect the borehole.

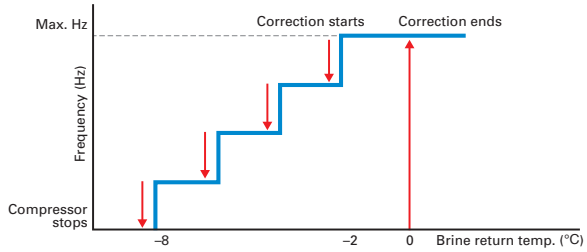


When the brine return temperature is below -8°C and brine outlet temperature is below -12°C, the unit operates only by booster heater. The correction tempeature can be changed by dip SW.

## Comfort with Silence

Mitsubishi Electric heat pumps are designed to give you highly efficient and eco-friendly heating with the lowest possible noise level. ecodan geodan achieved industry-leading low noise, 42dB(A)*.

*B0W35 Rated condition

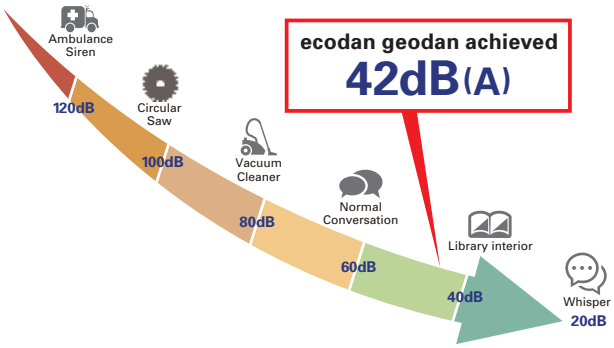


### Silencing Noise

The triple covering structure of the compressor unit greatly reduces sound level through noise absorption.

1st Cover
Compressor sound insulation box
(with noise absorbing felt and damper)

2nd Cover
Module Box
(with noise absorbing felt)

3rd Cover
Outside panel
(with noise absorbing felt)

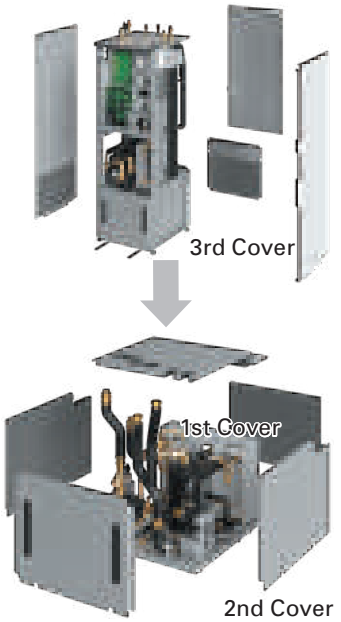


### Avoiding Vibration Noise

Rubber mounted stabilizer plate cushions the vibration noise of the compressor

## Easy Installation & Transportation

At only 1750mm, ecodan geodan is the class-leading compact unit on the market, making it the ideal solution for rooms and basements with a low ceiling height.

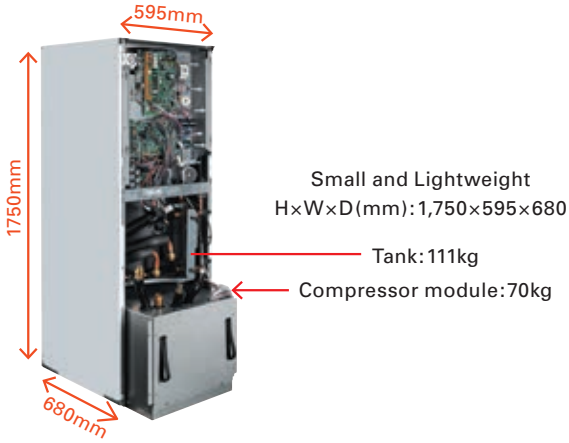


### Easy Transportation

Compressor module can be removed for easier installation and transportation. Once removed, the tank can be transported horizontally.

### Flexible Piping Work

Pipings on top are placed in a Zig-Zag shape. This enables easier installation without interrupting each piping work, especially in case of replacement.

### Easy Adjustment

Adjust bolt capable of 50mm expansion for easy installation even on uneven surfaces.

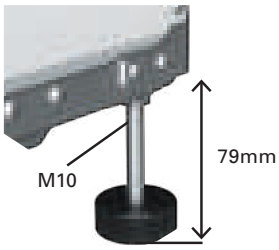

# Mr. SLIM+

## A Smart Air Conditioning and Hot Water Supply System Conceived from Eco-conscious Ideas

Mr. SLIM+ has a heat recovery function, which uses waste heat from air conditioners to heat water. Thanks to heat recovery, the Mr. SLIM+ model can achieve a COP of 7.0*, resulting in intelligent systems with amazing efficiency.

*Conditions for air-to-air cooling: Indoor 27°C (dry bulb), 19°C (wet bulb); Outdoor 35°C (dry bulb)

## 1 Unit, 2 Roles – Total Comfort Year-round

### Air Conditioning and Hot Water Supply Matching the Needs of Each Room

### All-in-one outdoor unit (air conditioning, domestic hot water supply and hot water heating)

**Mr. SLIM for Air-to-Air**

Mr. SLIM+ utilises a duct system that enables the air conditioning or heating of multiple rooms, and other indoor unit type systems that it is possible to fit to various applications.

**ecodan for Air-to-Water**

✓Domestic hot water (DHW) supply
✓Heating for multiple rooms

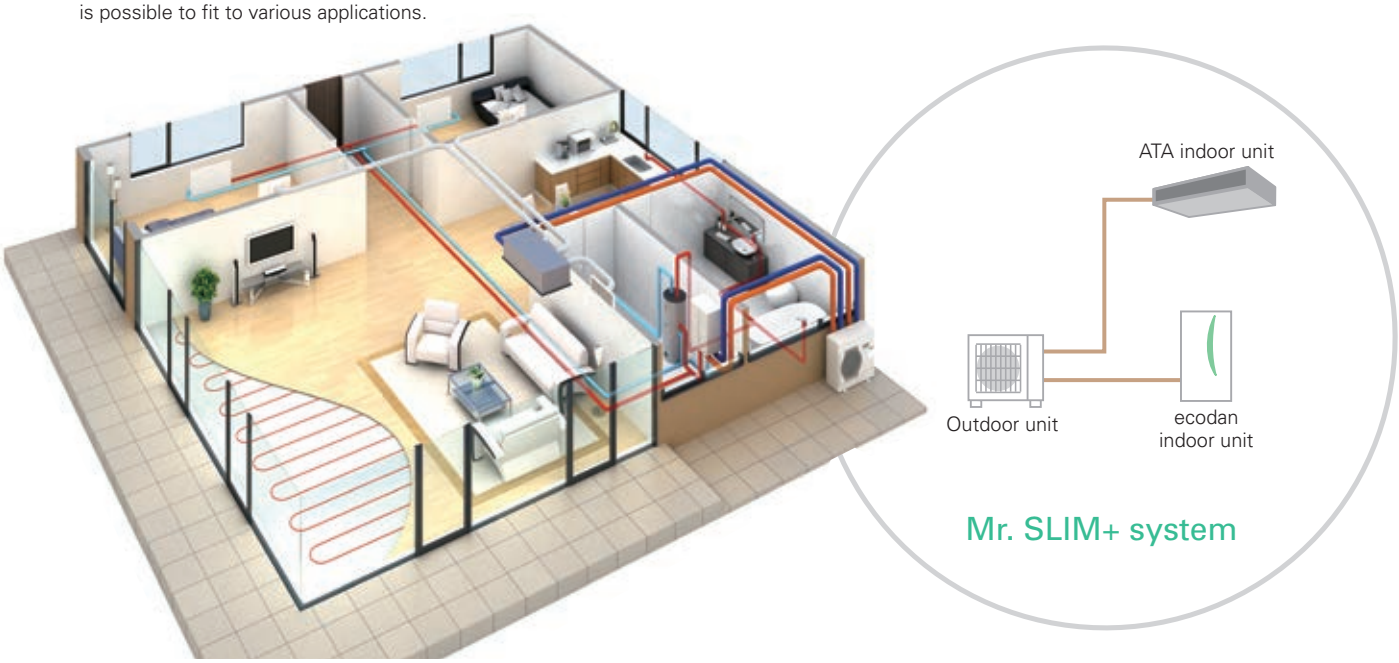


## Various Operations

**Mr. SLIM / ATA (Air Cooling)**

Cooling using ATA indoor unit

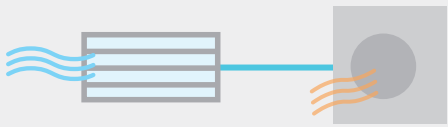

**Mr. SLIM / ATA (Air Heating)**

Heating using ATA indoor unit

**ecodan / ATW (Hot water heating + DHW)**

Heating and DHW using ATW indoor unit

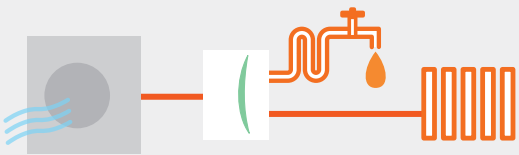

**Mr. SLIM + ecodan / ATA (Air Cooling) + DHW**

Heat recovery using both ATA and ATW indoor units

# Specifications

| | | | | | | | | | | |
|---|---|---|---|---|---|---|---|---|---|---|
| Indoor unit | | | | | PLA-ZM71EA | PKA-M71KAL | PCA-M71KA | PSA-RP71KA | PEAD-M71JA | PEAD-M71JAL |
| Outdoor unit | | | | | PUHZ-FRP71VHA2 | PUHZ-FRP71VHA2 | PUHZ-FRP71VHA2 | PUHZ-FRP71VHA2 | PUHZ-FRP71VHA2 | PUHZ-FRP71VHA2 |
| Refrigerant | | | | | R410A*1 | | | | | |
| Power supply | Outdoor (V / Phase / Hz) | | | | 230 / Single / 50 | | | | | |
| Air-to-Air (ATA) | Cooling | Capacity | Rated | kW | 7.1 | 7.1 | 7.1 | 7.1 | 7.1 | 7.1 |
| | | | Min-Max | kW | 3.3-8.1 | 3.3-8.1 | 3.3-8.1 | 3.3-8.1 | 3.3-8.1 | 3.3-8.1 |
| | | Total input | Rated | kW | 1.88 | 1.93 | 1.93 | 2.15 | 2.10 | 2.04 |
| | | EER | | | 3.77 | 3.67 | 3.67 | 3.30 | 3.38 | 3.48 |
| | | Design load | | kW | 7.1 | 7.1 | 7.1 | 7.1 | 7.1 | 7.1 |
| | | Annual electricity consumption *2 | | kWh/a | 376 | 386 | 384 | 409 | 444 | 427 |
| | | SEER *4 | | | 6.6 | 6.4 | 6.4 | 6.0 | 5.5 | 5.8 |
| | | | Energy-efficiency class | | $A^{++}$ | $A^{++}$ | $A^{++}$ | $A^{+}$ | A | $A^{+}$ |
| | Heating (average season) | Capacity | Rated | kW | 8.0 | 8.0 | 8.0 | 8.0 | 8.0 | 8.0 |
| | | | Min-Max | kW | 3.5-10.2 | 3.5-10.2 | 3.5-10.2 | 3.5-10.2 | 3.5-10.2 | 3.5-10.2 |
| | | Total input | Rated | kW | 2.11 | 2.29 | 2.29 | 2.42 | 2.11 | 2.11 |
| | | COP | | | 3.80 | 3.50 | 3.50 | 3.30 | 3.79 | 3.79 |
| | | Design load | | kW | 4.7 | 4.7 | 4.7 | 4.7 | 4.9 | 4.9 |
| | | Declared capacity | at reference design temperature | kW | 4.7 (–10°C) | 4.7 (–10°C) | 4.7 (–10°C) | 4.7 (–10°C) | 4.9 (–10°C) | 4.9 (–10°C) |
| | | | at bivalent temperature | kW | 4.7 (–10°C) | 4.7 (–10°C) | 4.7 (–10°C) | 4.7 (–10°C) | 4.9 (–10°C) | 4.9 (–10°C) |
| | | | at operation limit temperature | kW | 3.5 (–20°C) | 3.5 (–20°C) | 3.5 (–20°C) | 3.5 (–20°C) | 3.7 (–20°C) | 3.7 (–20°C) |
| | | Back-up heating capacity | | kW | 0 | 0 | 0 | 0 | 0 | 0 |
| | | Annual electricity consumption *2 | | kWh/a | 1,509 | 1,564 | 1,556 | 1,699 | 1,791 | 1,791 |
| | | SCOP *4 | | | 4.3 | 4.2 | 4.2 | 3.8 | 3.8 | 3.8 |
| | | | Energy-efficiency class | | $A^{+}$ | $A^{+}$ | $A^{+}$ | A | A | A |
| Air-to-Water (ATW) | Nominal flow rate (for heating) | | | L/min | 22.90 | | | | | |
| | Heating *5 | A7W35 | Capacity | kW | 8.00 | 8.00 | 8.00 | 8.00 | 8.00 | 8.00 |
| | | | Input | kW | 1.98 | 1.98 | 1.98 | 1.98 | 1.98 | 1.98 |
| | | | COP | | 4.05 | 4.05 | 4.05 | 4.05 | 4.05 | 4.05 |
| | | A2W35 | Capacity | kW | 7.50 | 7.50 | 7.50 | 7.50 | 7.50 | 7.50 |
| | | | Input | kW | 2.67 | 2.67 | 2.67 | 2.67 | 2.67 | 2.67 |
| | | | COP | | 2.81 | 2.81 | 2.81 | 2.81 | 2.81 | 2.81 |
| | Heat recovery (ATA cooling & ATW) *6 | W45 | Capacity (ATA cooling + ATW) | kW | 7.1+8.0 | 7.1+8.0 | 7.1+8.0 | 7.1+8.0 | 7.1+8.0 | 7.1+8.0 |
| | | | Input | kW | 1.90 | 1.93 | 1.95 | 2.02 | 2.15 | 2.13 |
| | | | COP | | 7.95 | 7.82 | 7.74 | 7.48 | 7.02 | 7.09 |
| | | W55 | Capacity (ATA cooling + ATW) | kW | 7.1+9.0 | 7.1+9.0 | 7.1+9.0 | 7.1+9.0 | 7.1+9.0 | 7.1+9.0 |
| | | | Input | kW | 2.97 | 3.00 | 3.02 | 3.09 | 3.22 | 3.20 |
| | | | COP | | 5.42 | 5.37 | 5.33 | 5.21 | 5.00 | 5.03 |
| | ATW indoor unit | | | | Cylinder unit or Hydro box (see previous page) | | | | | |
| Outdoor unit | Dimensions | HxWxD | | mm | 943-950-330 (+30) | | | | | |
| | Weight | | | kg | 73 | 73 | 73 | 73 | 73 | 73 |
| | Air volume | Cooling | | m³/min | 50 | 50 | 50 | 50 | 50 | 50 |
| | | Heating | | m³/min | 50 | 50 | 50 | 50 | 50 | 50 |
| | Sound pressure level (SPL) | Cooling | | dB(A) | 47 | 47 | 47 | 47 | 47 | 47 |
| | | Heat recovery | | dB(A) | 47 | 47 | 47 | 47 | 47 | 47 |
| | | ATA Heating | | dB(A) | 49 | 49 | 49 | 49 | 49 | 49 |
| | | ATW Heating | | dB(A) | 49 | 49 | 49 | 49 | 49 | 49 |
| | Sound power level (PWL) | Cooling | | dB(A) | 67 | 67 | 67 | 67 | 67 | 67 |
| | | Heat recovery | | dB(A) | 67 | 67 | 67 | 67 | 67 | 67 |
| | | ATA Heating | | dB(A) | 68 | 68 | 68 | 68 | 68 | 68 |
| | | ATW Heating | | dB(A) | 68 | 68 | 68 | 68 | 68 | 68 |
| | Operating current (max) | | | A | 19.0 | 19.0 | 19.0 | 19.0 | 19.0 | 19.0 |
| | Breaker size | | | A | 25 | 25 | 25 | 25 | 25 | 25 |
| Ext.piping | Diameter | Liquid/Gas | | mm | 9.52/15.88 | 9.52/15.88 | 9.52/15.88 | 9.52/15.88 | 9.52/15.88 | 9.52/15.88 |
| | Max. length | Out-In | | m | 30 (for ATA) + 30 (for ATW) | | | | | |
| | Max. height | Out-In | | m | 20 | 20 | 20 | 20 | 20 | 20 |
| Guaranteed operating range (outdoor) | | Cooling *3 | | °C | –15~+46 | –15~+46 | –15~+46 | –15~+46 | –15~+46 | –15~+46 |
| | | Heating | | °C | –20~+21 | –20~+21 | –20~+21 | –20~+21 | –20~+21 | –20~+21 |
| | | ATW | | °C | –20~+35 | –20~+35 | –20~+35 | –20~+35 | –20~+35 | –20~+35 |
| | | Heat recovery | | °C | +7~+46 | +7~+46 | +7~+46 | +7~+46 | +7~+46 | +7~+46 |

*1 Refrigerant leakage contributes to climate change. Refrigerant with lower global warming potential (GWP) would contribute less to global warming than a refrigerant with higher GWP, if leaked to the atmosphere. This appliance contains a refrigerant fluid with a GWP equal to 1975. This means that if 1 kg of this refrigerant fluid would be leaked to the atmosphere, the impact on global warming would be 1975 times higher than 1 kg of $CO_2$, over a period of 100 years. Never try to interfere with the refrigerant circuit yourself or disassemble the product yourself and always ask a professional. The GWP of R410A is 2088 in the IPCC 4th Assessment Report.
*2 Energy consumption based on standard test results. Actual energy consumption will depend on how the appliance is used and where it is located.
*3 Optional air protection guide is required where ambient temperature is lower than –5°C.
*4 SEER/SCOP values are measured based on EN14825.
*5 Air-to-Water values are measured based on EN14511 (Circulation pump input is not included.).
*6 Conditions for Air-to-Air cooling: Indoor 27°C (dry bulb) /19°C (wet bulb); Outdoor 35°C (dry bulb).

# PUMY+ecodan

## Air-to-Air and Air-to-Water Hybrid Multi Split System

### 1 Unit, 2 Roles – Total Comfort Year-round

### Air Conditioning and Hot Water Supply Matching the Needs of Each Room

All-in-one outdoor unit (air conditioning, domestic hot water supply and hot water heating)

**PUMY for Air-to-Air**
PUMY utilises various indoor units, enabling the air conditioning or heating of multiple rooms, and controls each unit individually.

**ecodan for Air-to-Water**
✓Domestic hot water (DHW) supply
✓Heating for multiple rooms

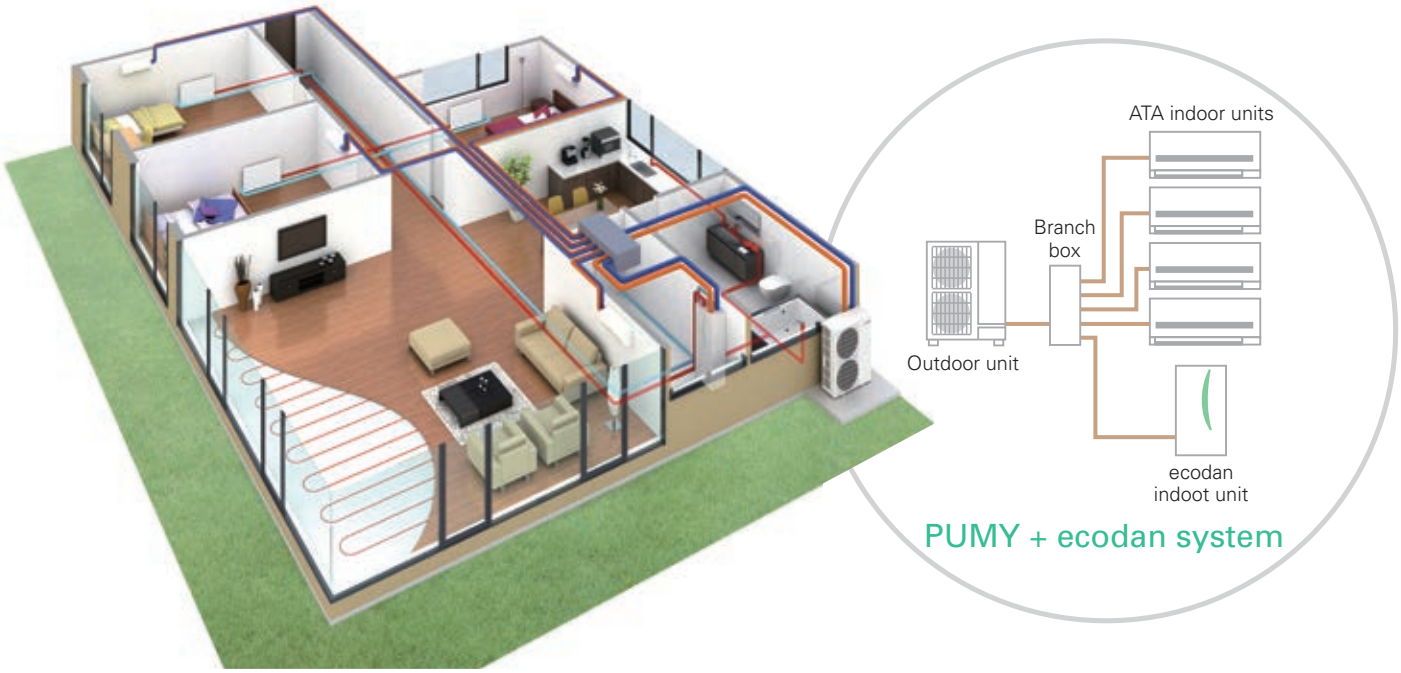


## Main Operation Patterns

**ATA (Air Heating)**
Heating using ATA indoor unit

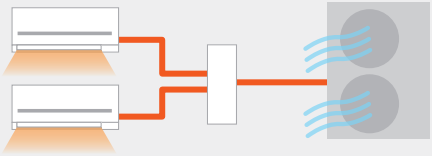

**ATA (Air Cooling)**
Cooling using ATA indoor unit

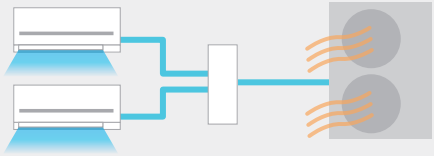

**ATW (Hot water heating)**
Heating using ATW indoor unit

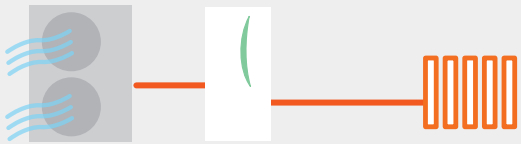

**ATW (DHW)**
DHW using ATW indoor unit

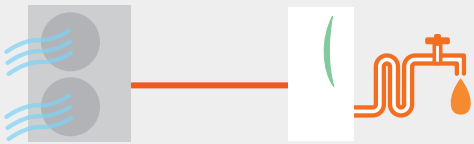

## Optional Operation Patterns* (simultaneous)

**ATA (Air Heating) & ATW (Hot water heating)**

**ATA (Air Heating) & ATW (DHW)**

*When using optional simultaneous operation, there are some restrictions, such as connectable indoor units, operation range and DHW flow temp.

## Usage Pattern All-in-one System Solution

### Summer 2-in-1 Operation

In summer ATA cooling and DHW are utilised. Keep your room comfortable with ATA cooling during high temperature daytime. Heat pump operates to heat up water stored in the DHW tank when ATA is not operated. The hot water can be utilised for shower and washing dishes during daytime.

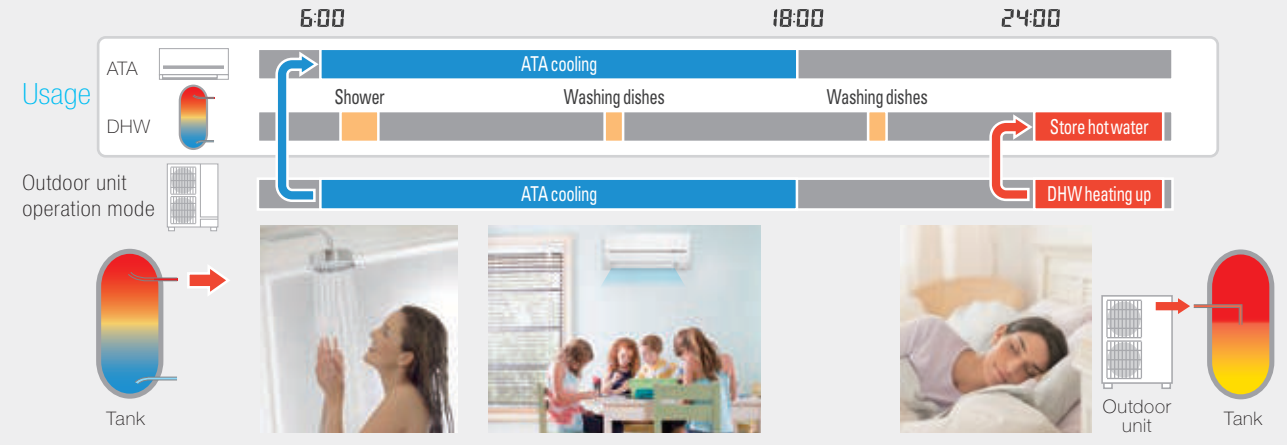


### Spring & Autumn 2-in-1 Operation

In spring and autumn, ATA heating and DHW are utilised. ATA heating can warm up each room quickly during the low temperature morning and evening. Heat pump operates to heat up water stored in the DHW tank when ATA is not operated. The hot water can be utilised for shower and washing dishes during daytime.

### Winter ecodan

In winter ATW heating and DHW are utilised. ATW heating warms home all the day in severe cold weather. ATW heating stops temporarily only when the heat pump operates to heat up water stored in the DHW tank.

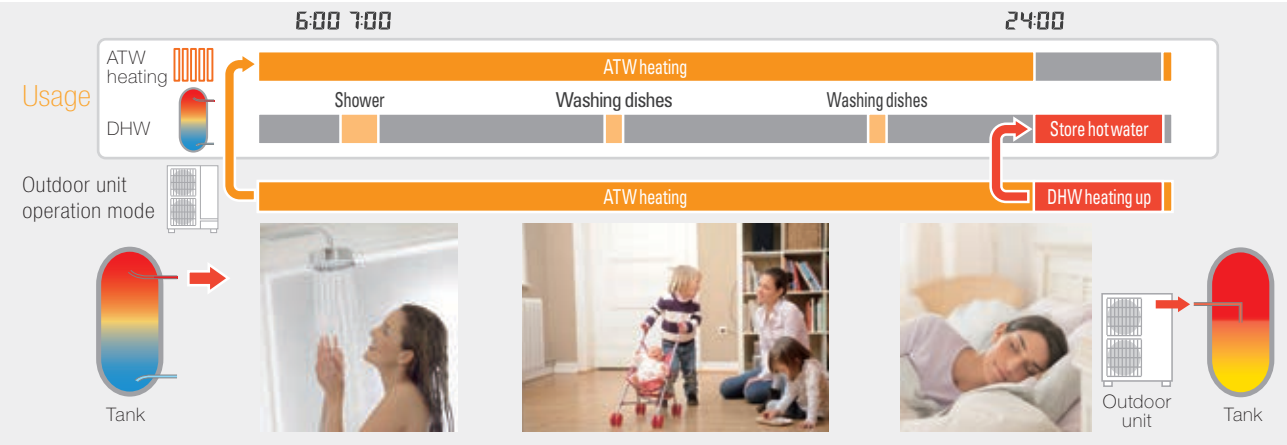

# PUMY + ecodan

| Model name | | | | | | PUMY-P112VKM4(-BS) | PUMY-P125VKM4(-BS) | PUMY-P140VKM4(-BS) | PUMY-P112YKM(E)4(-BS) | PUMY-P125YKM(E)4(-BS) | PUMY-P140YKM(E)4(-BS) |
|---|---|---|---|---|---|---|---|---|---|---|---|
| Power supply | | | | | | 1-phase 220 - 230 - 240V, 50Hz | | | 3-phase 380 - 400 - 415V, 50Hz | | |
| Air-to-Air (ATA) | Cooling (nominal)*1 | Capacity | | | kW | 12.5 | 14.0 | 15.5 | 12.5 | 14.0 | 15.5 |
| | | Power input | | | kW | 2.79 | 3.46 | 4.52 | 2.79 | 3.46 | 4.52 |
| | | EER | | | | 4.48 | 4.05 | 3.43 | 4.48 | 4.05 | 3.43 |
| | Temp. range of cooling | Indoor temp. | | | W.B. | 15 - 24°C | | | | | |
| | | Outdoor temp.*2 | | | D.B. | −5 - 52°C | | | | | |
| | Heating (nominal)*1 | Capacity | | | kW | 14.0 | 16.0 | 18.0 | 14.0 | 16.0 | 18.0 |
| | | Power input | | | kW | 3.04 | 3.74 | 4.47 | 3.04 | 3.74 | 4.47 |
| | | COP | | | | 4.61 | 4.28 | 4.03 | 4.61 | 4.28 | 4.03 |
| | Temp. range of heating | Indoor temp. | | | W.B. | 15 - 27°C | | | | | |
| | | Outdoor temp. | | | D.B. | −20 - 15°C | | | | | |
| Air-to-Water (ATW) | Nominal flow rate (for heating) | | | | L/min | 35.8 | | | | | |
| | Heating*3 | A7W35 | Capacity | | kW | 12.5 | | | | | |
| | | | Power input | | kW | 3.06 | | | | | |
| | | | COP | | | 4.08 | | | | | |
| | | A2W35 | Capacity | | kW | 10.0 | | | | | |
| | | | Power input | | kW | 3.50 | | | | | |
| | | | COP | | | 2.86 | | | | | |
| | Guaranteed operating range | ATW | Heating | | D.B. | −20 - +21°C | | | | | |
| | | | DHW | | D.B. | −20 - +35°C | | | | | |
| | | ATA + ATW | ATA heating + DHW | | D.B. | 7 - +21°C | | | | | |
| | | | ATA heating + ATW heating *4 | | D.B. | −10 - +21°C | | | | | |
| | Maximum Outlet water temp. | | | | °C | 55 | | | | | |
| Outdoor unit | Indoor unit connectable | ATA only | Total capacity | | | 50 to 130% of outdoor unit capacity | | | | | |
| | | | Model/Quantity | Branch box system | | 15-100/8 | 15-100/8 | 15-100/8 | 15-100/8 | 15-100/8 | 15-100/8 |
| | | | | Mixed system*12 | | 15-140*5/10 | 15-140*5/10*6 | 15-140*5/10*6 | 15-140*5/10 | 15-140*5/10*6 | 15-140*5/10*6 |
| | | ATA + ATW individual operation | Total capacity | | | ATA : Max 130% of outdoor unit capacity + ATW (EHST20C or EHSC) *7 | | | | | |
| | | | Model/Quantity (including ATW) | Branch box system | | 15-100/8 | 15-100/8 | 15-100/8 | 15-100/8 | 15-100/8 | 15-100/8 |
| | | | | Mixed system*12 | | 15-140*5/10 | 15-140*5/10*6 | 15-140*5/10*6 | 15-140*5/10 | 15-140*5/10*6 | 15-140*5/10*6 |
| | | ATA + ATW simultaneous operation | Total capacity | | | Max 100% of outdoor unit capacity : ATA + ATW (EHST20C or EHSC) *7 | | | | | |
| | | | Model/Quantity | ATA*12 | | 15/1*8 | 15-25/2*9 | 15-42*11/3*10 | 15/1*8 | 15-25/2*9 | 15-42*11/3*10 |
| | | | | ATW | | ATW (EHST20C or EHSC) / 1 | | | | | |
| | Sound pressure level (measured in anechoic room) | | | | dB<A> | 49 / 51 | 50 / 52 | 51 / 53 | 49 / 51 | 50 / 52 | 51 / 53 |
| | Sound power level (measured in anechoic room) | | | | dB<A> | 69 / 71 | 70 / 72 | 71 / 73 | 69 / 71 | 70 / 72 | 71 / 73 |
| | Refrigerant piping diameter | | | Liquid pipe | mm | 9.52 flare | | | | | |
| | | | | Gas pipe | mm | 15.88 flare | | | | | |
| | Fan | Type × Quantity | | | | Propeller fan × 2 | | | | | |
| | | Airflow rate | | | m³/min | 110 | | | | | |
| | | | | | L/s | 1,883 | | | | | |
| | | | | | cfm | 3,884 | | | | | |
| | | Motor output | | | kW | 0.074 + 0.074 | | | | | |
| | Compressor | Type × Quantity | | | | Scroll hermetic compressor × 1 | | | | | |
| | | Starting method | | | | Inverter | | | | | |
| | | Motor output | | | kW | 2.9 | 3.5 | 3.9 | 2.9 | 3.5 | 3.9 |
| | External dimensions (H × W × D) | | | | mm | 1,338 × 1,050 × 330 (+40) | | | | | |
| | Weight | | | | kg | 122 | | | YKM: 125 / YKME: 136 | | |

*1

| | Indoor | Outdoor | Piping length | Level difference |
|---|---|---|---|---|
| Cooling | 27°C DB / 19°C WB | 35°C DB | 7.5m | 0m |
| Heating | 20°C DB | 7°C DB / 6°C WB | 7.5m | 0m |

*2 10 to 52°C D.B.: When connecting PKFY-P15/20/25VBM, PFFY-P20/25/32VKM, PFFY-P20/25/32VLE(R)M, PEFY-P∗VMA3 or M, S and P series indoor unit.
*3 In the case of ATW single connection. Input to circulation pump is not included.
*4 In the case of simultaneous operation of ATA heating and ATW heating, target flow temperature range is restricted to 45-55°C and when the ambient temp is under 7°C, the flow temp is lowered.
*5 Up to P100 when connecting via branch box.
*6 Up to 11 units when connecting via 2 branch boxes.
*7 Only one ecodan unit can be connected.
*8 Exceptionally, one MSZ-SF15VA or MSZ-AP15VF can be connected.
*9 Exceptionally, two MSZ-SF15VA or MSZ-AP15VF can be connected.
*10 Exceptionally, three MSZ-SF15VA or MSZ-AP15VF can be connected.
*11 In the case of City Multi connection, maxmum is P32.
*12 PKFY and PFFY series are not connectable.

## Piping specifications

| | | | |
|---|---|---|---|
| Total piping length | m | 150* | a+b+c+d+e+f |
| Farthest piping length | m | 80 | a+b+d or a+c+e |
| | | 85 | a+f |
| Total piping length betwen outdoor unit and branch box | m | 55 | a+b+c |
| Total piping length between branch boxes and indoor units | m | 95 | d+e |
| Farthest piping length from the first joint | m | 30 | b or c or f |
| Farthest piping length after branch box | m | 25 | d or e |
| Height difference (Outdoor upside / Outdoor downside) | m | 50 / 40 | |

*When an ecodan is connected, the maximum piping length is 150m.

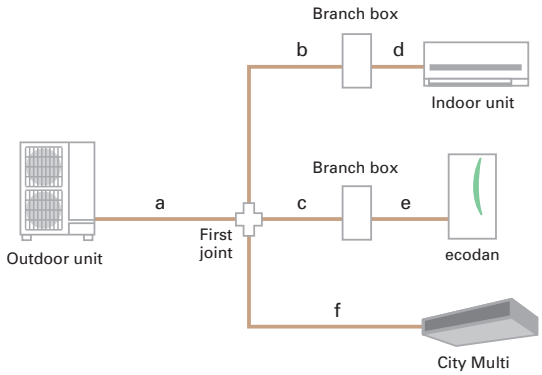

# PUMY+ecodan Compatibility Table

## ATW branch box connection compatibility table

| Series | Type | Model name | Compatibility | Type | Model name | Compatibility | Type | Model name | Compatibility |
|---|---|---|---|---|---|---|---|---|---|
| ATW | Cylinder unit | EHST20C-VM2/6D | ● | Hydro box | EHSC-VM2/6D | ● | Branch box | PAC-MK53BC | ● |
| | | EHST20C-YM9D | ● | | EHSC-YM9D | ● | | PAC-MK33BC | ● |
| | | EHST20C-TM9D | ● | | EHSC-TM9D | ● | | PAC-MK53BCB | ● |
| | | EHST20C-YM9ED | ● | | EHSC-YM9ED | ● | | PAC-MK33BCB | ● |

## Branch box connection compatibility table

| Series | Type | Model name | Capacity | | | | | | | | | | |
|---|---|---|---|---|---|---|---|---|---|---|---|---|---|
| | | | 15 | 18 | 20 | 22 | 25 | 35 | 42 | 50 | 60 | 71 | 100 |
| M series | Wall-mounted | MSZ-LN•VG | | | | | ● | ● | | ● | | | |
| | | MSZ-AP•VG | ● | | ● | | ● | ● | ● | ● | | | |
| | | MSZ-FH•VE2 | | | | | ● | ● | | ● | | | |
| | | MSZ-EF•VG | | ● | | ● | ● | ● | ● | ● | | | |
| | | MSZ-SF•VA | ● | | ● | | | | | | | | |
| | | MSZ-SF•VE3 | | | | | ● | ● | ● | ● | | | |
| | | MSZ-GF•VE2 | | | | | | | | | ● | ● | |
| | Floor-standing | MFZ-KJ•VE2 | | | | | ● | ● | | ● | | | |
| | 1-way cassette | MLZ-KP•VF | | | | | ● | ● | | ● | | | |
| S series | Ceiling-concealed | SEZ-M•DA(L) | | | | | ● | ● | | ● | ● | ● | |
| | 2×2 cassette | SLZ-M•FA | ● | | | | ● | ● | | ● | | | |
| P series | Ceiling-suspended | PCA-M•KA | | | | | | ● | | ● | ● | ● | ● |
| | 4-way cassette | PLA-M•EA | | | | | | ● | | ● | ● | ● | ● |
| | Ceiling-concealed | PEAD-M•JA(L) | | | | | | | | ● | ● | ● | ● |

## LEV kit connection compatibility table

| Series | I/U type | Model name | Capacity | | | | | | | | | |
|---|---|---|---|---|---|---|---|---|---|---|---|---|
| | | | 15 | 18 | 20 | 22 | 25 | 35 | 42 | 50 | 60 | 71 |
| M series | Wall-mounted | MSZ-LN•VG | | | | | ● | ● | | ● | | |
| | | MSZ-AP•VG | ● | | ● | | ● | ● | ● | ● | | |
| | | MSZ-FH•VE2 | | | | | ● | ● | | ● | | |
| | | MSZ-EF•VG | | ● | | ● | ● | ● | ● | ● | | |
| | | MSZ-SF•VA | ● | | ● | | | | | | | |
| | | MSZ-SF•VE3 | | | | | ● | ● | ● | ● | | |
| | Floor-standing | MFZ-KJ•VE2 | | | | | ● | ● | | ● | | |

## Connectable indoor unit capacity

For individual operation ATA+ATW (no simultaneous operation) ATA: Max 130% of outdoor unit capacity + ATW (EHST20C or EHSC)

| Outdoor capacity 12.5kW | |
|---|---|
| ATW indoor unit (Cylinder or Hydro box) 11.2kW | Connectable ATA indoor unit total capacity: Max.16.2kW (130%) |

| Outdoor capacity 14.0kW | |
|---|---|
| ATW indoor unit (Cylinder or Hydro box) 11.2kW | Connectable ATA indoor unit total capacity: Max.18.2kW (130%) |

| Outdoor capacity 15.5kW | |
|---|---|
| ATW indoor unit (Cylinder or Hydro box) 11.2kW | Connectable ATA indoor unit total capacity: Max.20.2kW (130%) |

For simultaneous operation of ATA+ATW Max 100% of outdoor unit capacity: ATA + ATW (EHST20C or EHSC)

| Outdoor capacity 12.5kW | | |
|---|---|---|
| ATW indoor unit (Cylinder or Hydro box) 11.2kW | ATA capacity Max. 1.3kW | *Exceptionally, one MSZ-SF15VA or MSZ-AP15VF can be connected. |

| Outdoor capacity 14.0kW | | |
|---|---|---|
| ATW indoor unit (Cylinder or Hydro box) 11.2kW | ATA capacity Max. 2.8kW | *Exceptionally, two units of MSZ-SF15VA or MSZ-AP15VF can be connected. |

| Outdoor capacity 15.5kW | | |
|---|---|---|
| ATW indoor unit (Cylinder or Hydro box) 11.2kW | ATA capacity Max. 4.3kW | *Exceptionally, three units of MSZ-SF15VA or MSZ-AP15VF can be connected. |

# Split Type Specifications

## Indoor unit

| <Cylinder unit (Heating only)> | | | | Small capacity | | | | | | | | | | |
|---|---|---|---|---|---|---|---|---|---|---|---|---|---|---|
| Model name | | | | EHST17D-VM2D | EHST20D-MED | EHST20D-VM2D | EHST20D-VM6D | EHST20D-YM9D | EHST20D-YM9ED | EHST20D-TM9D | EHST30D-MED | EHST30D-VM6ED | EHST30D-YM9ED | EHST30D-TM9ED |
| | | Type | | Heating only | | | | | | | | | | |
| | | Expansion vessel | | ✓ | — | ✓ | ✓ | ✓ | — | ✓ | — | — | — | — |
| | | Booster heater (2/6/9 kW) | | ✓ | — | ✓ | ✓ | ✓ | ✓ | ✓ | — | ✓ | ✓ | ✓ |
| Dimensions | | HxWxD | mm | 1400×595 x680 | 1600x595x680 | | | | | | 2050x595x680 | | | |
| Weight (empty) | | | kg | 93 | 98 | 104 | 105 | 106 | 101 | 106 | 113 | 115 | 116 | 116 |
| Control Board Power supply (Phase / V / Hz) | | | | ～/N,230V, 50Hz | ～/N,230V, 50Hz | ～/N,230V, 50Hz | ～/N,230V, 50Hz | ～/N,230V, 50Hz | ～/N,230V, 50Hz | ～/N,230V, 50Hz | ～/N,230V, 50Hz | ～/N,230V, 50Hz | ～/N,230V, 50Hz | ～/N,230V, 50Hz |
| Heater | Booster heater | Power supply (Phase / V / Hz) | | ～/N,230V, 50Hz | — | ～/N,230V, 50Hz | ～/N,230V, 50Hz | 3～,400V, 50Hz | 3～,400V, 50Hz | 3～,230V, 50Hz | — | ～/N,230V, 50Hz | 3～,400V, 50Hz | 3～,230V, 50Hz |
| | | Capacity | kW | 2 | — | 2 | 2+4 | 3+6 | 3+6 | 3+6 | — | 2+4 | 3+6 | 3+6 |
| | | Current | A | 9 | — | 9 | 26 | 13 | 13 | 23 | — | 26 | 13 | 23 |
| | | Breaker size | A | 16 | — | 16 | 32 | 16 | 16 | 32 | — | 32 | 16 | 32 |
| Domestic hot water tank | Volume / Material | | L / - | 170 / Stainless steel | 200 / Stainless steel | | | | | | 300 / Stainless steel | | | |
| Guranteed operating range *1 | Ambient | | °C | 0 - 35 (≦80%RH) | | | | | | | | | | |
| | Outdoor | Heating | °C | See outdoor unit spec table | | | | | | | | | | |
| | | Cooling | °C | — | | | | | | | | | | |
| Target temperature range | Heating | Room temperature | °C | 10 - 30 | | | | | | | | | | |
| | | Flow temperature | °C | 20 - 60 | | | | | | | | | | |
| | Coolimg | Room temperature | °C | — | | | | | | | | | | |
| | | Flow temperature | °C | — | | | | | | | | | | |
| DHW tank performance | | Max. hot water temperature | °C | 70 | *2 | 70 | | | | | *2 | 70 | | |
| | | Water heater energy efficiency class | | $A^+$ | | | | | | | A - $A^+$ | | | |
| Sound pressure level (PWL) | | | dB (A) | 41 | | | | | | | | | | |

*1 The indoor environment must be frost-free
*2 For the model without booster heater and immersion heater, the maximum allowable hot water temperature is 3℃ lower than maximum outlet water of outdoor unit.
For the maximum outlet water of outdoor unit, refer to outdoor unit data book.

| <Cylinder unit (Heating only)> | | | | Medium capacity | | | | | | | | | |
|---|---|---|---|---|---|---|---|---|---|---|---|---|---|
| Model name | | | | EHST20C-MED | EHST20C-VM2D | EHST20C-VM6D | EHST20C-YM9D | EHST20C-YM9ED | EHST20C-TM9D | EHST30C-MED | EHST30C-VM6ED | EHST30C-YM9ED | EHST30C-TM9ED |
| | | Type | | Heating only | | | | | | | | | |
| | | Expansion vessel | | — | ✓ | ✓ | ✓ | — | ✓ | — | — | — | — |
| | | Booster heater (2/6/9 kW) | | — | ✓ | ✓ | ✓ | ✓ | ✓ | — | ✓ | ✓ | ✓ |
| Dimensions | | HxWxD | mm | 1600x595x680 | | | | | | 2050x595x680 | | | |
| Weight (empty) | | | kg | 106 | 113 | 114 | 115 | 109 | 115 | 118 | 120 | 121 | 121 |
| Control Board Power supply (Phase / V / Hz) | | | | ～/N,230V, 50Hz | ～/N,230V, 50Hz | ～/N,230V, 50Hz | ～/N,230V, 50Hz | ～/N,230V, 50Hz | ～/N,230V, 50Hz | ～/N,230V, 50Hz | ～/N,230V, 50Hz | ～/N,230V, 50Hz | ～/N,230V, 50Hz |
| Heater | Booster heater | Power supply (Phase / V / Hz) | | — | ～/N,230V, 50Hz | ～/N,230V, 50Hz | 3～,400V, 50Hz | 3～,400V, 50Hz | 3～,400V, 50Hz | — | ～/N,230V, 50Hz | 3～,400V, 50Hz | 3～,230V, 50Hz |
| | | Capacity | kW | — | 2 | 2+4 | 3+6 | 3+6 | 3+6 | — | 2+4 | 3+6 | 3+6 |
| | | Current | A | — | 9 | 26 | 13 | 13 | 23 | — | 26 | 13 | 23 |
| | | Breaker size | A | — | 16 | 32 | 16 | 16 | 32 | — | 32 | 16 | 32 |
| Domestic hot water tank | Volume / Material | | L / - | 200 / Stainless steel | | | | | | 300 / Stainless steel | | | |
| Guranteed operating range *1 | Ambient | | °C | 0 - 35 (≦80%RH) | | | | | | | | | |
| | Outdoor | Heating | °C | See outdoor unit spec table | | | | | | | | | |
| | | Cooling | °C | — | | | | | | | | | |
| Target temperature range | Heating | Room temperature | °C | 10 - 30 | | | | | | | | | |
| | | Flow temperature | °C | 20 - 60 | | | | | | | | | |
| | Coolimg | Room temperature | °C | — | | | | | | | | | |
| | | Flow temperature | °C | — | | | | | | | | | |
| DHW tank performance | | Max. hot water temperature | °C | *2 | 70 | | | | | *2 | 70 | | |
| | | Water heater energy efficiency class | | $A^+$ | | | | | | A | | | |
| Sound pressure level (PWL) | | | dB (A) | 40 | | | | | | | | | |

*1 The indoor environment must be frost-free
*2 For the model without booster heater and immersion heater, the maximum allowable hot water temperature is 3℃ lower than maximum outlet water of outdoor unit.
For the maximum outlet water of outdoor unit, refer to outdoor unit data book.

| <Hydro box (Heating only)> | | | | Small capacity | | | | | | Medium capacity | | | | | | Large capacity | |
|---|---|---|---|---|---|---|---|---|---|---|---|---|---|---|---|---|---|
| Model name | | | | EHSD-MED | EHSD-VM2D | EHSD-VM6D | EHSD-YM9D | EHSD-YM9ED | EHSD-TM9D | EHSC-MED | EHSC-VM2D | EHSC-VM6D | EHSC-YM9D | EHSC-YM9ED | EHSC-TM9D | EHSE-YM9ED | EHSE-MED |
| | | Type | | Heating only | | | | | | | | | | | | | |
| | | Expansion vessel | | — | ✓ | ✓ | ✓ | — | ✓ | — | ✓ | ✓ | ✓ | — | ✓ | — | — |
| | | Booster heater (2/6/9 kW) | | — | ✓ | ✓ | ✓ | ✓ | ✓ | — | ✓ | ✓ | ✓ | ✓ | ✓ | ✓ | — |
| Dimensions | | HxWxD | mm | 800x530x360 | | | | | | | | | | | | 950x600x360 | |
| Weight (empty) | | | kg | 36 | 43 | 44 | 44 | 40 | 44 | 40 | 47 | 48 | 48 | 43 | 48 | 63 | 61 |
| Control Board Power supply (Phase / V / Hz) | | | | ～/N,230V, 50Hz | ～/N,230V, 50Hz | ～/N,230V, 50Hz | ～/N,230V, 50Hz | ～/N,230V, 50Hz | ～/N,230V, 50Hz | ～/N,230V, 50Hz | ～/N,230V, 50Hz | ～/N,230V, 50Hz | ～/N,230V, 50Hz | ～/N,230V, 50Hz | ～/N,230V, 50Hz | ～/N,230V, 50Hz | ～/N,230V, 50Hz |
| Heater | Booster heater | Power supply (V / Phase / Hz) | | — | ～/N,230V, 50Hz | ～/N,230V, 50Hz | 3～,400V, 50Hz | 3～,400V, 50Hz | 3～,230V, 50Hz | — | ～/N,230V, 50Hz | ～/N,230V, 50Hz | 3～,400V, 50Hz | 3～,400V, 50Hz | 3～,230V, 50Hz | 3～,400V, 50Hz | — |
| | | Capacity | kW | — | 2 | 2+4 | 3+6 | 3+6 | 3+6 | — | 2 | 2+4 | 3+6 | 3+6 | 3+6 | 3+6 | — |
| | | Current | A | — | 9 | 26 | 13 | 13 | 23 | — | 9 | 26 | 13 | 13 | 23 | 13 | — |
| | | Breaker size | A | — | 16 | 32 | 16 | 16 | 32 | — | 16 | 32 | 16 | 16 | 32 | 16 | — |
| Guranteed operating range *1 | Ambient | | L / - | 0 - 35 (≦80%RH) | | | | | | | | | | | | | |
| | Outdoor | Heating | °C | See outdoor unit spec table | | | | | | | | | | | | | |
| | | Cooling | °C | — | | | | | | | | | | | | | |
| Target temperature range | Heating | Room temperature | °C | 10 - 30 | | | | | | | | | | | | | |
| | | Flow temperature | °C | 20 - 60 | | | | | | | | | | | | | |
| | Coolimg | Room temperature | °C | — | | | | | | | | | | | | | |
| | | Flow temperature | °C | — | | | | | | | | | | | | | |
| Sound pressure level (PWL) | | | dB (A) | 41 | | | | | | 40 | | | | | | 45 | |

*1 The indoor environment must be frost-free.

# Split Type Specifications

## Indoor unit

| <Cylinder unit (Reversible)> | | | | Small capacity | | | Medium capacity | |
|---|---|---|---|---|---|---|---|---|
| Model name | | | | ERST17D-VM2D | ERST20D-VM2D | ERST30D-VM2ED | ERST20C-VM2D | ERST30C-VM2ED |
| | | Type | | Heating and Cooling | | | | |
| | | Expansion vessel | | ✓ | ✓ | | ✓ | – |
| | | Booster heater (2/6/9 kW) | | ✓ | ✓ | ✓ | ✓ | ✓ |
| Dimensions | | HxWxD | mm | 1400x595x680 | 1600x595x680 | 2050x595x680 | 1600x595x680 | 2050x595x680 |
| Weight (empty) | | | kg | 93 | 104 | 114 | 113 | 120 |
| Control Board Power supply (Phase / V / Hz) | | | | ～/N, 230V, 50Hz | ～/N, 230V, 50Hz | ～/N, 230V, 50Hz | ～/N, 230V, 50Hz | ～/N, 230V, 50Hz |
| Heater | Booster heater | Power supply (V / Phase / Hz) | | ～/N, 230V, 50Hz | ～/N, 230V, 50Hz | ～/N, 230V, 50Hz | ～/N, 230V, 50Hz | ～/N, 230V, 50Hz |
| | | Capacity | kW | 2 | 2 | 2 | 2 | 2 |
| | | Current | A | 9 | 9 | 9 | 9 | 9 |
| | | Breaker size | A | 16 | 16 | 16 | 16 | 16 |
| Domestic hot water tank | Volume / Material | | L / - | 170 / Stainless steel | 200 / Stainless steel | 300 / Stainless steel | 200 / Stainless steel | 300 / Stainless steel |
| Guranteed operating range *1 | Ambient | | °C | 0 - 35 (≦80%RH) | | | | |
| | Outdoor | Heating | °C | See outdoor unit spec table | | | | |
| | | Cooling | °C | See outdoor unit spec table *2 | | | | |
| Target temperature range | Heating | Room temperature | °C | 10 - 30 | | | | |
| | | Flow temperature | °C | 20 - 60 | | | | |
| | Coolimg | Room temperature | °C | – | | | | |
| | | Flow temperature | °C | 5 - 25 | | | | |
| DHW tank performance | | Max. hot water temperature | °C | 70 | | | | |
| | | Water heater energy efficiency class | | A+ | A+ | A - A+ | A+ | A |
| Sound pressure level (PWL) | | | dB (A) | 41 | | | 40 | |

*1 The indoor environment must be frost-free.
*2 During cooling operation at low outdoor temperature (10℃ or lower), frozen water may cause damage on plate heat exchanger.

| <Hydro box (Reversible)> | | | | Small capacity | | Medium capacity | | Large capacity | |
|---|---|---|---|---|---|---|---|---|---|
| Model name | | | | ERSD-MED | ERSD-VM2D | ERSC-MED | ERSC-VM2D | ERSE-YM9ED | ERSE-MED |
| | | Type | | Heating only | | | | | |
| | | Expansion vessel | | – | ✓ | – | ✓ | – | – |
| | | Booster heater (2/6/9 kW) | | – | ✓ | – | ✓ | ✓ | – |
| Dimensions | | HxWxD | mm | 800x530x360 | | | | 950x600x360 | |
| Weight (empty) | | | kg | 38 | 44 | 40 | 47 | 64 | 62 |
| Control Board Power supply (Phase / V / Hz) | | | | ～/N, 230V, 50Hz | ～/N, 230V, 50Hz | ～/N, 230V, 50Hz | ～/N, 230V, 50Hz | ～/N, 230V, 50Hz | ～/N, 230V, 50Hz |
| Heater | Booster heater | Power supply (V / Phase / Hz) | | – | ～/N, 230V, 50Hz | – | ～/N, 230V, 50Hz | 3～, 400V, 50Hz | – |
| | | Capacity | kW | – | 2 | – | 2 | 3+6 | – |
| | | Current | A | – | 9 | – | 9 | 13 | – |
| | | Breaker size | A | – | 16 | – | 16 | 16 | – |
| Guranteed operating range *1 | Ambient | | °C | 0 - 35 (≦80%RH) | | | | | |
| | Outdoor | Heating | °C | See outdoor unit spec table | | | | | |
| | | Cooling | °C | See outdoor unit spec table | | | | | |
| Target temperature range | Heating | Room temperature | °C | 10 - 30 | | | | | |
| | | Flow temperature | °C | 20 - 60 | | | | | |
| | Coolimg | Room temperature | °C | – | | | | | |
| | | Flow temperature | °C | 5-25 | | | | | |
| Sound pressure level (PWL) | | | dB (A) | 41 | | 40 | | 45 | |

*1 The indoor environment must be frost-free
*2 If you use our system in cooling mode at the low ambient temperature (10℃ or below), there are some risks of plate heat exchanger breaking by frozen water.

R32

# Split Type Specifications

## Outdoor unit

| | | | | Eco Inverter | | |
|---|---|---|---|---|---|---|
| Model name | | | | SUZ-SWM40VA | SUZ-SWM60VA | SUZ-SWM80VA |
| Refrigerant | | | | R32*1 | | |
| Dimensions | | H×W×D | mm | 880×840×330 | 880×840×330 | 880×840×330 |
| Weight | | | kg | 54 | 54 | 54 |
| Power supply (V / Phase / Hz) | | | | 230 / 1-ph / 50 | 230 / 1-ph / 50 | 230 / 1-ph / 50 |
| Heating | A7W35*2 | Nominal | kW | 4.0 | 6.0 | 7.5 |
| | | COP | | 5.20 | 4.86 | 4.70 |
| | A2W35*2 | Nominal | kW | 4.0 | 5.0 | 6.5 |
| | | COP | | 3.90 | 3.33 | 3.40 |
| Average climate water outlet 35°C*3 | | Class | | A+++ | A+++ | A+++ |
| | | ηs | | 180 | 181 | 182 |
| Average climate water outlet 55°C*3 | | Class | | A++ | A++ | A++ |
| | | ηs | | 129 | 130 | 131 |
| DHW 200L(L) Load Profile (Average climate)*4 | | Class | | A+ | A+ | A+ |
| | | ηwh | | 159 | 148 | 148 |
| Max outlet water temperature (°C) | | | | 60 | 60 | 60 |
| Cooling | A35W7*2 | Nominal | kW | 4.5 | 5.0 | 5.4 |
| | | EER | | 3.29 | 3.03 | 3.00 |
| | A35W18*2 | Nominal | kW | 5.6 | 6.0 | 6.3 |
| | | EER | | 4.97 | 4.88 | 4.80 |
| PWL (Heating)*5 | | | dB(A) | 58 | 60 | 62 |
| Max operating current | | | A | 13.9 | 13.9 | 13.9 |
| Breaker size | | | A | 16 | 16 | 16 |
| Piping | Diameter | Liquid/Gas | mm | 6.35 / 12.7 | 6.35 / 12.7 | 6.35 / 12.7 |
| | Length | Out-In | m | 5-30 | 5-30 | 5-30 |
| | Height | Out-In | m | Max 30 | Max 30 | Max 30 |
| Guaranteed Operating Range | Heating | | °C | −20°C~24°C | −20°C~24°C | −20°C~24°C |
| | DHW | | °C | −20°C~35°C | −20°C~35°C | −20°C~35°C |
| | Cooling | | °C | 10°C~46°C | 10°C~46°C | 10°C~46°C |

## Outdoor unit

| | | | | Power Inverter, Heating only | | | | ZUBADAN, Heating only | | | | |
|---|---|---|---|---|---|---|---|---|---|---|---|---|
| Model name | | | | PUD-SWM60VAA | PUD-SWM80V/YAA | PUD-SWM100V/YAA | PUD-SWM120V/YAA | PUD-SHWM60VAA | PUD-SHWM80V/YAA | PUD-SHWM100V/YAA | PUD-SHWM120V/YAA | PUD-SHWM140V/YAA |
| Refrigerant | | | | R32*1 | | | | | | | | |
| Dimensions | | H×W×D | mm | 1020×1050×480 | 1020×1050×480 | 1020×1050×480 | 1020×1050×480 | 1020×1050×480 | 1020×1050×480 | 1020×1050×480 | 1020×1050×480 | 1020×1050×480 |
| Weight | | | kg | 101 | 101/114 | 105/118 | 105/118 | 102 | 102/115 | 108/121 | 108/121 | 110/122 |
| Power supply (V / Phase / Hz) | | | | VAA: 230 / 1-ph / 50, YAA: 400 / 3-ph / 50 | | | | | | | | |
| Heating | A7W35*2 | Nominal | kW | 5.0 | 6.0 | 8.0 | 10.0 | 5.0 | 6.0 | 8.0 | 10.0 | 12.0 |
| | | COP | | 4.76 | 4.76 | 4.95 | 4.70 | 4.94 | 5.00 | 5.00 | 4.80 | 4.70 |
| | A2W35*2 | Nominal | kW | 6.0 | 8.0 | 10.0 | 12.0 | 6.0 | 8.0 | 10.0 | 12.0 | 14.0 |
| | | COP | | 3.60 | 3.55 | 3.30 | 3.24 | 3.80 | 3.75 | 3.45 | 3.30 | 3.05 |
| Average climate water outlet 35°C*3 | | Class | | A+++ | A+++ | A+++ | A+++ | A+++ | A+++ | A+++ | A+++ | A+++ |
| | | ηs | | 175 | 178/176 | 178/177 | 177/176 | 178 | 181/179 | 180/178 | 179/177 | 179/177 |
| Average climate water outlet 55°C*3 | | Class | | A++ | A++ | A++ | A++ | A++ | A++ | A++ | A++ | A++ |
| | | ηs | | 130 | 131/130 | 131/130 | 129/128 | 134 | 135/134 | 136/135 | 135/134 | 134/134 |
| DHW 200L(L)/300L(XL) Load Profile (Average climate)*4 | | Class | | A+ / A | A+ / A | A+ / A | A+ / A | A+ / A | A+ / A | A+ / A | A+ / A | A+ / A |
| | | ηwh | | 148/121 | 148/121 | 148/121 | 148/121 | 148/121 | 148/121 | 148/121 | 148/121 | 145/121 |
| Max outlet water temperature (°C) | | | | 60 | 60 | 60 | 60 | 60 | 60 | 60 | 60 | 60 |
| PWL (Heating)*5 | | | dB(A) | 55 | 56 | 59 | 60 | 55 | 56 | 59 | 60 | 62 |
| Max operating current | | | A | 16.5 | 22/8 | 26/10 | 28/12 | 16.5 | 22/8 | 26/10 | 28/12 | 35/12 |
| Breaker size | | | A | 20 | 25/16 | 30/16 | 32/16 | 20 | 25/16 | 30/16 | 32/16 | 40/16 |
| Piping | Diameter | Liquid/Gas | mm | 6.35/12.7 | 6.35/12.7 | 6.35/12.7 | 6.35/12.7 | 6.35/12.7 | 6.35/12.7 | 6.35/12.7 | 6.35/12.7 | 6.35/12.7 |
| | Length | Out-In | m | 2 - 30 | 2 - 30 | 2 - 30 | 2 - 30 | 2 - 30 | 2 - 30 | 2 - 30 | 2 - 30 | 2 - 25 |
| | Height | Out-In | m | Max. 30 | Max. 30 | Max. 30 | Max. 30 | Max. 30 | Max. 30 | Max. 30 | Max. 30 | Max. 25 |
| Guaranteed Operating Range | Heating | | °C | −25°C~24°C | −25°C~24°C | −25°C~24°C | −25°C~24°C | −28°C~24°C | −28°C~24°C | −28°C~24°C | −28°C~24°C | −28°C~24°C |
| | DHW | | °C | −25°C~35°C | −25°C~35°C | −25°C~35°C | −25°C~35°C | −28°C~35°C | −28°C~35°C | −28°C~35°C | −28°C~35°C | −28°C~35°C |

*1 Refrigerant leakage contribute to climate change. Refrigerant with lower global warming potential (GWP) would contribute less to global warming than a refrigerant with higher GWP, if leaked to the atomosphere. This appliance contains a refrigerant fluid with a GWP equal to 550. This means that if 1 kg of this refrigerant fluid would be leaked to the atmosphere, the impact on global warming would be 550 times higher than 1 kg of $CO_2$, over a period of 100 years. Never try to interfere with the refrigerant circuit yourself or disassemble the product yourself and always ask a professional. The GWP of R32 us 675 in the IPCC 4th Assessment Report.
*2 Air-to-Water values are measured based on EN14511 (Circulation pump input is not included.).
*3 ηs values are measured based on EN14825. *4 ηwh values are measured based on EN16147. *5 Sound power levels are measured based on EN12102.

R32

| Split type | Small capacity (Under 5kW)* | Medium capacity (6.0kW–14kW)* |
|---|---|---|
| ZUBADAN New Generation | | PUD-SHWM60/80/100/120/140 |
| POWER INVERTER | | PUD-SWM60/80/100/120 |
| Eco Inverter | SUZ-SWM40/60 | SUZ-SWM80 |

*Rated capacity is at conditions A2W35. (according to EN14511)

R410A

# Split Type Specifications

## Outdoor unit

| | | | | Power Inverter | | | | |
|---|---|---|---|---|---|---|---|---|
| Model name | | | | PUHZ-SW75V/YAA(-BS) | PUHZ-SW100V/YAA(-BS) | PUHZ-SW120V/YHA(-BS) | PUHZ-SW160YKA(-BS) | PUHZ-SW200YKA(-BS) |
| Refrigerant | | | | R410A*1 | | | | |
| Dimensions | | H×W×D | mm | 1020×1050×480 | 1020×1050×480 | 1350×950×330 | 1338×1050×330 | 1338×1050×330 |
| Weight | | | kg | 92/104 | 114/126 | 118/130 | 136 | 136 |
| Power supply (V / Phase / Hz) | | | | VAA, VHA: 230 / 1-ph / 50, YAA, YHA, YKA: 400 / 3-ph / 50 | | | | |
| Heating | A7W35*2 | Nominal | kW | 8.0 | 11.2 | 16.0 | 22.0 | 25.0 |
| | | COP | | 4.40 | 4.46 | 4.10 | 4.20 | 4.00 |
| | A2W35*2 | Nominal | kW | 7.5 | 10.0 | 12.0 | 16.0 | 20.0 |
| | | COP | | 3.40 | 3.32 | 3.24 | 3.11 | 2.80 |
| Average climate water outlet 35°C*3 | | Class | | $A^{++}$ | $A^{++}$ | $A^{++}$ | $A^{++}$ | $A^{++}$ |
| | | $\eta_s$ | | 162/160 | 167/165 | 162/162 | 161 | 163 |
| Average climate water outlet 55°C*3 | | Class | | $A^{++}$ | $A^{++}$ | $A^{++}$ | $A^{++}$ | $A^{++}$ |
| | | $\eta_s$ | | 129/128 | 130/129 | 125/125 | 125 | 127 |
| DHW 200L(L)/300L(XL) Load Profile (Average climate)*4 | | Class | | $A^{+}$ / A | $A^{+}$ / A | $A^{+}$ / A | – | – |
| | | $\eta_{wh}$ | | 145/120 | 145/120 | 138/118 | – | – |
| Max outlet water temperature (°C) | | | | 60 | 60 | 60 | – | – |
| Cooling | A35W7*2 | Nominal | kW | 7.1 | 10.0 | 12.5 | 16.0 | 20.0 |
| | | EER | | 2.70 | 2.83 | 2.32 | 2.76 | 2.25 |
| | A35W18*2 | Nominal | kW | 7.1 | 10.0 | 14.0 | 18.0 | 22.0 |
| | | EER | | 4.43 | 4.47 | 4.08 | 4.56 | 4.1 |
| PWL (Heating)*5 | | | dB(A) | 58 | 60 | 72 | 78 | 78 |
| Max operating current | | | A | 22.0/11.5 | 28.0/12.0 | 29.5/13.0 | 19.0 | 21.0 |
| Breaker size | | | A | 25/16 | 32/16 | 32/16 | 25 | 32 |
| Piping | Diameter | Liquid/Gas | mm | 9.52/15.88 | 9.52/15.88 | 9.52/15.88 | 9.52/25.4 | 12.7/25.4 |
| | Length | Out-In | m | 40 | 75 | 75 | 80 | 80 |
| | Height | Out-In | m | 10 | 10 | 30 | 30 | 30 |
| Guaranteed Operating Range | Heating | | °C | –20°C~21°C | –20°C~21°C | –20°C~21°C | –20°C~21°C | –20°C~21°C |
| | DHW | | °C | –20°C~35°C | –20°C~35°C | –20°C~35°C | –20°C~35°C | –20°C~35°C |
| | Cooling | | °C | –15°C~46°C | –15°C~46°C | –15°C~46°C | –15°C~46°C | –15°C~46°C |

| | | | | ZUBADAN | | | |
|---|---|---|---|---|---|---|---|
| Model name | | | | PUHZ-SHW80V/YAA(-BS) | PUHZ-SHW112V/YAA | PUHZ SHW140YHA | PUHZ-SHW230YKA2 |
| Refrigerant | | | | R410A*1 | | | |
| Dimensions | | H×W×D | mm | 1020×1050×480 | 1020×1050×480 | 1350×950×330 | 1338×1050×330 |
| Weight | | | kg | 116/128 | 116/128 | 134 | 143 |
| Power supply (V / Phase / Hz) | | | | VAA, VHA: 230 / 1-ph / 50, YAA, YHA, YKA: 400 / 3-ph / 50 | | | |
| Heating | A7W35*2 | Nominal | kW | 8.0 | 11.2 | 14.0 | 23.0 |
| | | COP | | 4.65 | 4.40 | 4.22 | 3.65 |
| | A2W35*2 | Nominal | kW | 8.0 | 11.2 | 14.0 | 23.0 |
| | | COP | | 3.55 | 3.22 | 2.96 | 2.37 |
| Average climate water outlet 35°C*3 | | Class | | $A^{++}$ | $A^{++}$ | $A^{++}$ | $A^{++}$ |
| | | $\eta_s$ | | 169/167 | 171/169 | 163 | 164 |
| Average climate water outlet 55°C*3 | | Class | | $A^{++}$ | $A^{++}$ | $A^{++}$ | $A^{++}$ |
| | | $\eta_s$ | | 133/132 | 135/135 | 127 | 127 |
| DHW 200L(L)/300L(XL) Load Profile (Average climate)*4 | | Class | | $A^{+}$ / A | $A^{+}$ / A | $A^{+}$ / A | – |
| | | $\eta_{wh}$ | | 145/120 | 145/120 | 138/118 | – |
| Max outlet water temperature (°C) | | | | 60 | 60 | 60 | 60 |
| Cooling | A35W7*2 | Nominal | kW | 7.1 | 10.0 | 12.5 | 20.0 |
| | | EER | | 3.31 | 2.83 | 2.17 | 2.22 |
| | A35W18*2 | Nominal | kW | 7.1 | 10 | 12.5 | 20.0 |
| | | EER | | 4.52 | 4.74 | 4.26 | 3.55 |
| PWL (Heating)*5 | | | dB(A) | 59 | 60 | 70 | 75 |
| Max operating current | | | A | 22/13 | 28/13 | 13 | 20 |
| Breaker size | | | A | 25/16 | 32/16 | 16 | 25 |
| Piping | Diameter | Liquid/Gas | mm | 9.52/15.88 | 9.52/15.88 | 9.52/15.88 | 12.7/25.4 |
| | Length | Out-In | m | 75 | 75 | 75 | 80 |
| | Height | Out-In | m | 30 | 30 | 30 | 30 |
| Guaranteed Operating Range | Heating | | °C | –28°C~21°C | –28°C~21°C | –28°C~21°C | –25°C~21°C |
| | DHW | | °C | –28°C~35°C | –28°C~35°C | –28°C~35°C | –25°C~35°C |
| | Cooling | | °C | –15°C~46°C | –15°C~46°C | –15°C~46°C | –15°C~46°C |

*1 Refrigerant leakage contribute to climate change. Refrigerant with lower global warming potential (GWP) would contribute less to global warming than a refrigerant with higher GWP, if leaked to the atomosphere. This appliance contains a refrigerant fluid with a GWP equal to 550. This means that if 1 kg of this refrigerant fluid would be leaked to the atmosphere, the impact on global warming would be 550 times higher than 1 kg of $CO_2$, over a period of 100 years. Never try to interfere with the refrigerant circuit yourself or disassemble the product yourself and always ask a professional. The GWP of R410A us 2088 in the IPCC 4th Assessment Report.
*2 Air-to-Water values are measured based on EN14511 (Circulation pump input is not included.).
*3 ηs values are measured based on EN14825. *4 ηwh values are measured based on EN16147. *5 Sound power levels are measured based on EN12102.

R410A

| Split type | Medium capacity (7.5kW–14kW) | Large capacity (≧16kW) |
|---|---|---|
| ZUBADAN New Generation | PUHZ-SHW80/112AA PUHZ-SHW140 | PUHZ-SHW230 |
| POWER INVERTER | PUHZ-SW75/100AA PUHZ-SW120 | PUHZ-SW160/200 |

R32

# Packaged Type Specifications

## Indoor unit

<Cylinder unit (Heating only)>

| Model name | | | | EHPT17X-VM2D | EHPT17X-VM6D | EHPT17X-YM9D | EHPT20X-MED | EHPT20X-VM6D | EHPT20X-YM9D | EHPT20X-YM9ED | EHPT20X-TM9D | EHPT20X-MHEDW | EHPT30X-MED | EHPT30X-YM9ED |
|---|---|---|---|---|---|---|---|---|---|---|---|---|---|---|
| | | Type | | Heating only | | | | | | | | | | |
| | | Immersion heater | | – | – | – | – | – | – | – | – | ✓ | – | – |
| | | Expansion vessel | | ✓ | ✓ | ✓ | – | ✓ | ✓ | – | ✓ | – | – | – |
| | | Booster heater | | ✓ | ✓ | ✓ | – | ✓ | ✓ | ✓ | ✓ | – | – | ✓ |
| Dimensions | | H×W×D | mm | 1400×595~680 | | | 1600×595×680 | | | | | | 2050×595×680 | |
| Weight (empty) | | | kg | 85 | 86 | 87 | 93 | 101 | 102 | 96 | 102 | 90 | 106 | 109 |
| Control board power supply (Phase / V / Hz) | | | | ~/N, 230V, 50Hz | ~/N, 230V, 50Hz | ~/N, 230V, 50Hz | ~/N, 230V, 50Hz | ~/N, 230V, 50Hz | ~/N, 230V, 50Hz | ~/N, 230V, 50Hz | ~/N, 230V, 50Hz | ~/N, 230V, 50Hz | ~/N, 230V, 50Hz | ~/N, 230V, 50Hz |
| Heater | Booster heater*2 | Power supply (Phase / V / Hz) | | ~/N, 230V, 50Hz | ~/N, 230V, 50Hz | 3~, 400V, 50Hz | – | ~/N, 230V, 50Hz | 3~, 400V, 50Hz | 3~, 400V, 50Hz | 3~, 230V, 50Hz | – | – | 3~, 400V, 50Hz |
| | | Capacity | kW | 2 | 2+4 | 3+6 | – | 2+4 | 3+6 | 3+6 | 3+6 | – | – | 3+6 |
| | | Current | A | 9 | 26 | 13 | – | 26 | 13 | 13 | 23 | – | – | 13 |
| | | Breaker size | A | 16 | 32 | 16 | – | 32 | 16 | 16 | 32 | – | – | 16 |
| | Immersion heater | Power supply (Phase / V / Hz) | | – | – | – | – | – | – | – | – | ~/N, 230V, 50Hz | – | – |
| | | Capacity | kW | – | – | – | – | – | – | – | – | 3 | – | – |
| | | Current | A | – | – | – | – | – | – | – | – | 13 | – | – |
| | | Breaker size | A | – | – | – | – | – | – | – | – | 16 | – | – |
| Domestic hot water tank | Volume / Material | | L / – | 170 / Stainless steel | | | 200 / Stainless steel | | | | | | 300 / Stainless steel | |
| Guaranteed operating range*1 | Ambient | | °C | 0 - 35 (≦80%RH) | | | | | | | | | | |
| | Outdoor | Heating | °C | See outdoor unit spec table | | | | | | | | | | |
| | | Cooling | °C | – | | | | | | | | | | |
| Target temperature range | Heating | Room temperature | °C | 10~30 | | | | | | | | | | |
| | | Flow temperature | °C | 20~60 | | | | | | | | | | |
| | Cooling | Room temperature | °C | – | | | | | | | | | | |
| | | Flow temperature | °C | – | | | | | | | | | | |
| DHW tank performance | Max. hot water temperature | | °C | 70 | | | *3 | 70 | | | | | *3 | 70 |
| | Water heater emergy efficiency class | | | A+ | | | | | | | | | | |
| Sound pressure level (PWL) | | | dB (A) | 40 | | | | | | | | | | |

*1 The indoor environment must be frost-free.
*2 Do not fit immersion heaters without thermal cut-out. Use only Mitsubishi Electric service parts as a direct replacement.
*3 For the model without booster heater and immersion heater, the maximum allowable hot water temperature is 3°C lower than maximum outlet water of outdoor unit.
For the maximum outlet water of outdoor unit, refer to outdoor unit data book.

<Cylinder unit (Reversible)>

| Model name | | | | ERPT17X-VM2D | ERPT20X-MD | ERPT20X-VM2D | ERPT20X-VM6D | ERPT30X-VM2ED |
|---|---|---|---|---|---|---|---|---|
| | | Type | | Heating and cooling | | | | |
| | | Immersion heater | | – | – | – | – | – |
| | | Expansion vessel | | ✓ | ✓ | ✓ | ✓ | – |
| | | Booster heater | | ✓ | – | ✓ | ✓ | ✓ |
| Dimensions | | H×W×D | mm | 1400×595×680 | 1600×595×680 | | | 2050×595×680 |
| Weight (empty) | | | kg | 86 | 99 | 100 | 101 | 107 |
| Control board power supply (Phase / V / Hz) | | | | ~/N, 230V, 50Hz | ~/N, 230V, 50Hz | ~/N, 230V, 50Hz | | |
| Heater | Booster heater | Power supply (Phase / V / Hz) | | ~/N, 230V, 50Hz | – | ~/N, 230V, 50Hz | | |
| | | Capacity | kW | 2 | – | 2 | 2+4 | 2 |
| | | Current | A | 9 | – | 9 | 26 | 9 |
| | | Breaker size | A | 16 | – | 16 | 32 | 16 |
| | Immersion heater*2 | Power supply (Phase / V / Hz) | | – | – | – | – | – |
| | | Capacity | kW | – | – | – | – | – |
| | | Current | A | – | – | – | – | – |
| | | Breaker size | A | – | – | – | – | – |
| Domestic hot water tank | Volume / Material | | L / – | 170 / Stainless steel | 200 / Stainless steel | | | 300 / Stainless steel |
| Guaranteed operating range*1 | Ambient | | °C | 0 - 35 (≦80%RH) | | | | |
| | Outdoor | Heating | °C | See outdoor unit spec table | | | | |
| | | Cooling | °C | See outdoor unit spec table*3 | | | | |
| Target temperature range | Heating | Room temperature | °C | 10~30 | | | | |
| | | Flow temperature | °C | 20~60 | | | | |
| | Cooling | Room temperature | °C | – | | | | |
| | | Flow temperature | °C | 5~25 | | | | |
| DHW tank performance | Max. hot water temperature | | °C | 70 | | | | |
| | Water heater emergy efficiency class | | | A+ | | | | A |
| Sound pressure level (PWL) | | | dB (A) | 40 | | | | |

*1 The indoor environment must be frost-free.
*2 Do not fit immersion heaters without thermal cut-out. Use only Mitsubishi Electric service parts as a direct replacement.
*3 During cooling operation at low outdoor temperature (10℃ or lower), frozen water may cause damage on plate heat exchanger.

<Hydro box (Heating only)>

| Model name | | | | EHPX-MED | EHPX-VM2D | EHPX-VM6D | EHPX-YM9D | EHPX-YM9ED |
|---|---|---|---|---|---|---|---|---|
| | | Type | | Heating only | | | | |
| | | Immersion heater | | – | – | – | – | – |
| | | Expansion vessel | | – | ✓ | ✓ | ✓ | – |
| | | Booster heater | | – | ✓ | ✓ | ✓ | ✓ |
| Dimensions | | H×W×D | mm | 800×530×360 | | | | |
| Weight (empty) | | | kg | 28 | 35 | 37 | 37 | 32 |
| Control board power supply (Phase / V / Hz) | | | | ~/N, 230V, 50Hz | | | | |
| Heater | Booster heater | Power supply (Phase / V / Hz) | | – | ~/N, 230V, 50Hz | | 3~, 400V, 50Hz | |
| | | Capacity | kW | – | 2 | 2+4 | 3+6 | 3+6 |
| | | Current | A | – | 9 | 26 | 13 | 13 |
| | | Breaker size | A | – | 16 | 32 | 16 | 16 |
| Guaranteed operating range*1 | Ambient | | °C | 0~35 (≦80%RH) | | | | |
| | Outdoor | Heating | °C | See outdoor unit spec table | | | | |
| | | Cooling | °C | – | | | | |
| Target temperature range | Heating | Room temperature | °C | 10~30 | | | | |
| | | Flow temperature | °C | 20~60 | | | | |
| | Cooling | Room temperature | °C | – | | | | |
| | | Flow temperature | °C | – | | | | |
| Sound pressure level (PWL) | | | dB (A) | 40 | | | | |

*1 The indoor environment must be frost-free.

## Outdoor unit

| Model name | | | | PUZ-WM50VHA | PUZ-WM60VAA | PUZ-WM85V/YAA | PUZ-WM112V/YAA |
|---|---|---|---|---|---|---|---|
| Refrigerant | | | | R32*1 | | | |
| Dimensions | | H×W×D | mm | 943×950×330 | 1020×1050×480 | 1020×1050×480 | 1020×1050×480 |
| Weight | | | kg | 71 | 98 | 98/111 | 119/132 |
| Power supply (V / Phase / Hz) | | | | VHA • VAA: 230 / 1-ph / 50, YHA • YAA: 400 / 3-ph / 50 | | | |
| Heating | A7W35*2 | Nominal | kW | 5.0 | 6.0 | 8.5 | 11.2 |
| | | COP | | 5.00 | 5.06 | 4.80 | 4.70 |
| | A2W35*2 | Nominal | kW | 5.0 | 6.0 | 8.5 | 11.2 |
| | | COP | | 3.70 | 3.75 | 3.51 | 3.44 |
| Average climate water outlet 35°C*3 | Class | | | A+++ | A+++ | A+++ | A+++ |
| | $\eta_s$ | | | 183 | 190 | 193/190 | 191/189 |
| Average climate water outlet 55°C*3 | Class | | | A++ | A++ | A++ | A++ |
| | $\eta_s$ | | | 129 | 142 | 139/138 | 134/133 |
| DHW 200L(L) Load Profile (Average climate)*4 | Class | | | A+ | A+ | A+ | A+ |
| | $\eta_{wh}$ | | | 135 | 145 | 145 | 148 |
| Max outlet water temperature (°C) | | | | 60 | 60 | 60 | 60 |
| Cooling | A35W7*2 | Nominal | kW | 4.5 | 6.0 | 7.5 | 10.0 |
| | | EER | | 3.40 | 3.30 | 3.15 | 3.30 |
| | A35W18*2 | Nominal | kW | 4.5 | 6.0 | 7.5 | 10.0 |
| | | EER | | 5.00 | 4.45 | 4.90 | 4.90 |
| PWL (Heating)*5 | | | dB(A) | 61 | 58 | 58 | 60 |
| Max operating current | | | A | 13.0 | 13.0 | 22.0/11.5 | 28.0/13.0 |
| Breaker size | | | A | 16 | 16 | 25/16 | 32/16 |
| Piping | Diameter | Liquid/Gas | mm | – | – | – | – |
| | Length | Out-In | m | – | – | – | – |
| | Height | Out-In | m | – | – | – | – |
| Guaranteed Operating Range | Heating | | °C | –20°C~21°C | –20°C~21°C | –20°C~21°C | –25°C~21°C |
| | DHW | | °C | –20°C~35°C | –20°C~35°C | –20°C~35°C | –25°C~35°C |
| | Cooling | | °C | 10°C~46°C | 10°C~46°C | 10°C~46°C | 10°C~46°C |

*1 Refrigerant leakage contribute to climate change. Refrigerant with lower global warming potential (GWP) would contribute less to global warming than a refrigerant with higher GWP, if leaked to the atomosphere. This appliance contains a refrigerant fluid with a GWP equal to 550. This means that if 1 kg of this refrigerant fluid would be leaked to the atmosphere, the impact on global warming would be 550 times higher than 1 kg of $CO_2$, over a period of 100 years. Never try to interfere with the refrigerant circuit yourself or disassemble the product yourself and always ask a professional. The GWP of R32 us 675 in the IPCC 4th Assessment Report.
*2 Air-to-Water values are measured based on EN14511 (Circulation pump input is not included.).
*3 ηs values are measured based on EN14825.
*4 ηwh values are measured based on EN16147.
*5 Sound power levels are measured based on EN12102.

R32

| Packaged type | Small capacity (Under 5kW)* | Medium capacity (6.0kW–11.2kW)* |
|---|---|---|
| POWER INVERTER | PUZ-WM50 | PUHZ-WM60/85/112 |

*Rated capacity is at conditions A2W35. (according to EN14511)

# Optional Parts

## Split type

<Indoor unit>

| Parts name | Model name | Cylinder | Hydrobox | Remarks |
|---|---|---|---|---|
| Wireless remote controller | PAR-WT50R-E | ✓ | ✓ | |
| Wireless receiver | PAR-WR51R-E | ✓ | ✓ | |
| Thermistors | PAC-SE41TS-E | ✓ | ✓ | For room temp. |
| | PAC-TH011-E | ✓ | ✓ | For buffer and zone (flow and return temp.) |
| | PAC-TH011TK2-E | – | ✓ | For tank temp. (5m) |
| | PAC-TH011TKL2-E | – | ✓ | For tank temp. (30m) |
| | PAC-TH012HT-E | ✓ | ✓ | For boiler and buffer (5m) |
| | PAC-TH012HTL-E | ✓ | ✓ | For boiler and buffer (30m) |
| Immersion heater | PAC-IH01V2-E | ✓ | – | 1Ph 1kW |
| | PAC-IH03V2-E | ✓ | – | 1Ph 3kW |
| Joint pipe | PAC-SG72RJ-E | ✓ | ✓ | For PUHZ-SW75 ø6.35 → ø9.52 |
| | PAC-SG73RJ-E | – | ✓ | For PUHZ-SW200YKA/SHW230YKA2 ø9.52 → ø12.7 |
| | PAC-SG74RJ-E | ✓ | ✓ | For PUHZ-SW75 ø12.7 → ø15.88 |
| | PAC-SH30RJ-E | ✓ | ✓ | For PUHZ-SW75AA ø9.52 → 6.35 |
| | PAC-SH50RJ-E | ✓ | ✓ | For PUHZ-SW75AA ø15.88 → 12.7 |
| Wi-Fi interface | MAC-567IF-E | ✓ | ✓ | |
| 2 Zone kit | PAC-TZ02-E | ✓ | ✓ | |
| Expansion vessel | PAC-EVP12-E | ✓ | – | 12L |

<Outdoor unit>

| Parts name | Model name | R32 (Eco Inverter) | | | R32 Heating only (Power Inverter) | | | | R32 Heating only (ZUBADAN) | | | | |
|---|---|---|---|---|---|---|---|---|---|---|---|---|---|
| | | SUZ-SWM40VA | SUZ-SWM60VA | SUZ-SWM80VA | PUD-SWM60VAA | PUD-SWM80V/YAA | PUD-SWM100V/YAA | PUD-SWM120V/YAA | PUD-SHWM60VAA | PUD-SHWM80V/YAA | PUD-SHWM100V/YAA | PUD-SHWM120V/YAA | PUD-SHWM140V/YAA |
| Connector for drain hose heater signal output | PAC-SE60RA-E | – | – | – | ✓ | ✓ | ✓ | ✓ | ✓ | ✓ | ✓ | ✓ | ✓ |
| Air discharge guide | MAC-886SG-E | ✓ | ✓ | ✓ | – | – | – | – | – | – | – | – | – |
| | PAC-SG59SG-E | – | – | – | – | – | – | – | – | – | – | – | – |
| | PAC-SH96SG-E | – | – | – | ✓ | ✓ | ✓ | ✓ | ✓ | ✓ | ✓ | ✓ | ✓ |
| Air protection guide | PAC-SH63AG-E | – | – | – | – | – | – | – | – | – | – | – | – |
| | PAC-SH95AG-E | – | – | – | ✓ | ✓ | ✓ | ✓ | ✓ | ✓ | ✓ | ✓ | ✓ |
| Attachement | PAC-SJ82AT-E | – | – | – | ✓ | ✓ | ✓ | ✓ | ✓ | ✓ | ✓ | ✓ | ✓ |
| Drain socket* | PAC-SG61DS-E | – | – | – | ✓ | ✓ | ✓ | ✓ | ✓ | ✓ | ✓ | ✓ | ✓ |
| Centralized drain pan* | PAC-SG64DP-E | – | – | – | – | – | – | – | – | – | – | – | – |
| | PAC-SH97DP-E | – | – | – | – | – | – | – | – | – | – | – | – |
| | PAC-SJ83DP-E | – | – | – | ✓ | ✓ | ✓ | ✓ | ✓ | ✓ | ✓ | ✓ | ✓ |
| Base heater | MAC-642BH-U1 | ✓ | ✓ | ✓ | – | – | – | – | – | – | – | – | – |
| Control/Service tool | PAC-SK52ST | – | – | – | ✓ | ✓ | ✓ | ✓ | ✓ | ✓ | ✓ | ✓ | ✓ |

| Parts name | Model name | R410A (Power Inverter) | | | | | R410A (ZUBADAN) | | | |
|---|---|---|---|---|---|---|---|---|---|---|
| | | PUHZ-SW75V/YAA | PUHZ-SW100V/YAA | PUHZ-SW120V/YHA | PUHZ-SW160YKA | PUHZ-SW200YKA | PUHZ-SHW80V/YAA | PUHZ-SHW112V/YAA | PUHZ-SHW140YHA | PUHZ-SHW230YKA2 |
| Connector for drain hose heater signal output | PAC-SE60RA-E | ✓ | ✓ | ✓ | ✓ | ✓ | ✓ | ✓ | ✓ | ✓ |
| Air discharge guide | MAC-886SG-E | – | – | – | – | – | – | – | – | – |
| | PAC-SG59SG-E | – | – | ✓ | – | – | – | – | ✓ | – |
| | PAC-SH96SG-E | ✓ | ✓ | ✓ | ✓ | ✓ | ✓ | ✓ | – | ✓ |
| Air protection guide | PAC-SH63AG-E | – | – | ✓ | – | – | – | – | ✓ | – |
| | PAC-SH95AG-E | ✓ | ✓ | – | ✓ | ✓ | ✓ | ✓ | – | ✓ |
| Attachement | PAC-SJ82AT-E | ✓ | ✓ | – | – | – | ✓ | ✓ | – | ✓ |
| Drain socket* | PAC-SG61DS-E | ✓ | ✓ | ✓ | ✓ | ✓ | ✓ | ✓ | – | – |
| Centralized drain pan* | PAC-SG64DP-E | – | – | ✓ | – | – | – | – | – | – |
| | PAC-SH97DP-E | – | – | – | ✓ | ✓ | – | – | – | – |
| | PAC-SJ83DP-E | ✓ | ✓ | – | – | – | ✓ | ✓ | – | – |
| Base heater | MAC-642BH-U1 | – | – | – | – | – | – | – | – | – |
| Control/Service tool | PAC-SK52ST | ✓ | ✓ | ✓ | ✓ | ✓ | ✓ | ✓ | ✓ | ✓ |

*Cannot be used for cold climate.

# Interface/Flow Temperature Controller

## Split type

| Parts name | Model name | Description |
|---|---|---|
| Capacity step control interface | PAC-IF011B-E | 1 PC board w/ Case |
| Flow temperature controller | PAC-IF032B-E | 1 PC board w/ Case |
| | PAC-IF033B-E | 1 PC board w/ Case |
| | PAC-IF033PCB-E | 10 PC board w/o case |
| System Controllers | PAC-IF071B-E | 1 PC board w/ Case |
| Pressure sensor | PAC-PS01-E | For SUZ-SWM40/60/80VA |
| Flow sensor | PAC-FS01-E | |
| Thermistor | PAC-TH011-E | |

## Optional Parts

### Packaged type

<Indoor unit>

| Parts name | Model name | Cylinder | Hydrobox | Remarks |
|---|---|---|---|---|
| Wireless remote controller | PAR-WT50R-E | ✓ | ✓ | |
| Wireless receiver | PAR-WR51R-E | ✓ | ✓ | |
| Thermistors | PAC-SE41TS-E | ✓ | ✓ | For room temp. |
| | PAC-TH011-E | ✓ | ✓ | For buffer and zone (flow and return temp.) |
| | PAC-TH011TK2-E | – | ✓ | For tank temp. (5m) |
| | PAC-TH011TKL2-E | – | ✓ | For tank temp. (30m) |
| | PAC-TH012HT-E | ✓ | ✓ | For boiler and buffer (5m) |
| | PAC-TH012HTL-E | ✓ | ✓ | For boiler and buffer (30m) |
| Immersion heater | PAC-IH01V2-E | ✓ (Except EHPT20X-MHEDW) | – | 1Ph 1kW |
| | PAC-IH03V2-E | ✓ (Except EHPT20X-MHEDW) | – | 1Ph 3kW |
| EHPT accessories for UK | PAC-WK02UK-E | ✓ | – | |
| Wi-Fi interface | MAC-567IF-E | ✓ | ✓ | |
| 2 Zone kit | PAC-TZ02-E | ✓ | ✓ | |
| Expansion vessel | PAC-EVP12-E | ✓ | – | 12L |

<Outdoor unit>

| Parts name | Model name | R32 (Power Inverter) | | | |
|---|---|---|---|---|---|
| | | PUZ-WM50VHA | PUZ-WM60VAA | PUZ-WM85V/YAA | PUZ-WM112V/YAA |
| Connector for drain hose heater signal output | PAC-SE60RA-E | ✓ | ✓ | ✓ | ✓ |
| Air discharge guide | PAC-SG59SG-E | ✓ | – | – | – |
| | PAC-SH96SG-E | – | ✓* | ✓* | ✓* |
| Air protection guide | PAC-SH63AG-E | ✓ | – | – | – |
| | PAC-SH95AG-E | – | ✓* | ✓* | ✓* |
| Attachement | PAC-SJ82AT-E | – | ✓ | ✓ | ✓ |
| Drain socket | PAC-SG61DS-E | ✓ | ✓ | ✓ | ✓ |
| Centralized drain pan | PAC-SG64DP-E | ✓ | – | – | – |
| | PAC-SJ83DP-E | – | ✓ | ✓ | ✓ |

*Attachment (PAC-SJ82AT-E) is necessary for the Air Guide.

## Interface/Flow Temperature Controller

### Packaged type

| Parts name | Model name | Description |
|---|---|---|
| Flow temperature controller | PAC-IF033B-E | 1 PC board w/ Case |
| | PAC-IF033PCB-E | 10 PC board w/o case |
| System Controllers | PAC-IF072B-E | |
| Flow sensor | PAC-FS01-E | |
| Thermistor | PAC-TH011-E | |

R32

# Ground Source Heat Pump Specifications

Specification with 38% propylene glycol

| | | | | |
|---|---|---|---|---|
| Model name | | | | EHGT17D-YM9ED |
| Heating Capacity (Min-Max) | | | | 2.5-10.0kW |
| Heat Output B0/W35 (Rated) | | | | 5.0kW |
| COP B0/W35 | | | | 4.58 |
| SCOP (Average Climate) | Low Temp | | | 5.27 |
| | Rank | | | $A^{+++}$ |
| | ηs*2 | | | 203% |
| | Mid Temp | | | 3.96 |
| | Rank | | | $A^{+++}$ |
| | ηs*2 | | | 150% |
| L Load Profile (Average Climate)*3 | ηwh | | | 134% |
| | Rank | | | $A^{+}$ |
| Sound Power Level (Rated)*4 | | | | 42dB(A) |
| Refrigerant /Amount | | | | R32*1/0.9kg |
| GWP | | | | 608 |
| Dimensions (HxWxD) | | | | 1,750mm×595mm×680mm |
| DHW Tank | | | | 170L |
| Weight | | | | Unit 181kg |
| Electrical data | | Heat pump | Power supply | 3ph/400V/50Hz |
| | | | Max current | 8A |
| | | | Breaker | 16A |
| | | Booster heater | Power supply | 3ph/400V/50Hz |
| | | | Capacity | 3kW+6kW |
| | | | Current | 13A |
| | | | Breaker | 16A |
| Connections | Water | Primary circuit | | ø28mm |
| | | DHW circuit | | ø22mm |
| | Brine | Brine circuit | | ø28mm |
| Operating range | Heating | Room temperature | | 10~30°C |
| | | Flow temperature | | 20~60°C |
| | DHW | | | 40~60°C |
| | Legionella prevention | | | 60~70°C |
| Guaranteed operating range | | Ambient | | 0~35°C |
| | | | | ≦80%RH |
| | | Water outlet temperature | | 20~60°C |
| | | Brine inlet temperature | | –8~30°C |
| | | Min. brine outlet temperature | | –12°C |
| Flow rate range | | Primary circuit | Max. | 27.7L/min |
| | | | Min. | 7.1L/min |
| | | Brine circuit | Max. | 27.7L/min |
| | | | Min. | 7.1L/min |
| Heat source fluid type | | | | 29 WT% Bioethanol |
| | | | | 38 WT% Propylene glycol |
| | | | | 25 WT% Ethylene glycol |

*1 Refrigerant leakage contribute to climate change. Refrigerant with lower global warming potential (GWP) would contribute less to global warming than a refrigerant with higher GWP, if leaked to the atomosphere. This appliance contains a refrigerant fluid with a GWP equal to 550. This means that if 1 kg of this refrigerant fluid would be leaked to the atmosphere, the impact on global warming would be 550 times higher than 1 kg of $CO_2$, over a period of 100 years. Never try to interfere with the refrigerant circuit yourself or disassemble the product yourself and always ask a professional. The GWP of R32 us 675 in the IPCC 4th Assessment Report.

*2 ηs values are measured based on EN14825. *3 ηwh values are measured based on EN16147. *4 Sound power levels are measured based on EN12102.

# D Generation

## Combination Table

### Split Indoor/outdoor unit

| Split indoor/outdoor unit combination | | R32 | | | | | | | | | | | | R410A | | | | | | | | | ATA/ATW Hybrid system | | | |
|---|---|---|---|---|---|---|---|---|---|---|---|---|---|---|---|---|---|---|---|---|---|---|---|---|---|---|
| | | Power inverter | | | | | | ZUBADAN | | | | | | Power inverter | | | | | ZUBADAN | | | | Mr. SLIM+ | PUMY | | |
| | | SUZ-SWM40VA | SUZ-SWM60VA | SUZ-SWM80VA | PUD-SWM60VAA | PUD-SWM80V/YAA | PUD-SWM100V/YAA | PUD-SWM120V/YAA | PUD-SHWM60VAA | PUD-SHWM80V/YAA | PUD-SHWM100V/YAA | PUD-SHWM120V/YAA | PUD-SHWM140V/YAA | PUHZ-SW75V/YAA | PUHZ-SW100V/YAA | PUHZ-SW120V/YHA | PUHZ-SW160YKA | PUHZ-SW200YKA | PUHZ-SHW80V/YAA | PUHZ-SHW112V/YAA | PUHZ-SHW140YHA | PUHZ-SHW230YKA2 | PUHZ-FRP71VHA2 | PUMY-P112V/YKM(E)4 | PUMY-P125V/YKM(E)4 | PUMY-P140V/YKM(E)4 |
| Heating only Cylinder | EHST17D-VM2D | ● | ● | ● | ● | ● | | | ● | ● | | | | ● | | | | | | | | | | | | |
| | EHST20D-MED | ● | ● | ● | ● | ● | ● | ● | ● | ● | ● | ● | ● | ● | | | | | | | | | | | | |
| | EHST20D-VM2D | ● | ● | ● | ● | ● | ● | ● | ● | ● | ● | ● | ● | ● | | | | | | | | | | | | |
| | EHST20D-VM6D | ● | ● | ● | ● | ● | ● | ● | ● | ● | ● | ● | ● | ● | | | | | | | | | | | | |
| | EHST20D-YM9D | ● | ● | ● | ● | ● | ● | ● | ● | ● | ● | ● | ● | ● | | | | | | | | | | | | |
| | EHST20D-YM9ED | ● | ● | ● | ● | ● | ● | ● | ● | ● | ● | ● | ● | ● | | | | | | | | | | | | |
| | EHST20D-TM9D | ● | ● | ● | ● | ● | ● | ● | ● | ● | ● | ● | ● | ● | | | | | | | | | | | | |
| | EHST30D-MED | | | ● | ● | ● | ● | ● | ● | ● | ● | ● | ● | ● | | | | | | | | | | | | |
| | EHST30D-VM6ED | | | ● | ● | ● | ● | ● | ● | ● | ● | ● | ● | ● | | | | | | | | | | | | |
| | EHST30D-YM9ED | | | ● | ● | ● | ● | ● | ● | ● | ● | ● | ● | ● | | | | | | | | | | | | |
| | EHST30D-TM9ED | | | ● | ● | ● | ● | ● | ● | ● | ● | ● | ● | ● | | | | | | | | | | | | |
| | EHST20C-MED | | | | | | | | | | | | | | ● | ● | | | ● | ● | ● | | ● | | | |
| | EHST20C-VM2D | | | | | | | | | | | | | | ● | ● | | | ● | ● | ● | | ● | ● | ● | ● |
| | EHST20C-VM6D | | | | | | | | | | | | | | ● | ● | | | ● | ● | ● | | ● | ● | ● | ● |
| | EHST20C-YM9D | | | | | | | | | | | | | | ● | ● | | | ● | ● | ● | | ● | ● | ● | ● |
| | EHST20C-YM9ED | | | | | | | | | | | | | | ● | ● | | | ● | ● | ● | | ● | ● | ● | ● |
| | EHST20C-TM9D | | | | | | | | | | | | | | ● | ● | | | ● | ● | ● | | ● | ● | ● | ● |
| | EHST30C-MED | | | | | | | | | | | | | | ● | ● | | | ● | ● | ● | | | | | |
| | EHST30C-VM6ED | | | | | | | | | | | | | | ● | ● | | | ● | ● | ● | | | | | |
| | EHST30C-YM9ED | | | | | | | | | | | | | | ● | ● | | | ● | ● | ● | | | | | |
| | EHST30C-TM9ED | | | | | | | | | | | | | | ● | ● | | | ● | ● | ● | | | | | |
| Reversible Cylinder | ERST17D-VM2D | ● | ● | ● | ● | ● | | | ● | ● | | | | ● | | | | | | | | | | | | |
| | ERST20D-VM2D | ● | ● | ● | ● | ● | ● | ● | ● | ● | ● | ● | ● | ● | | | | | | | | | | | | |
| | ERST30D-VM2ED | | | ● | ● | ● | ● | ● | ● | ● | ● | ● | ● | ● | | | | | | | | | | | | |
| | ERST20C-VM2D | | | | | | | | | | | | | | ● | ● | | | ● | ● | ● | | | | | |
| | ERST30C-VM2ED | | | | | | | | | | | | | | ● | ● | | | ● | ● | ● | | | | | |
| Heating only Hydro box | EHSD-MED | ● | ● | ● | ● | ● | ● | ● | ● | ● | ● | ● | ● | ● | | | | | | | | | | | | |
| | EHSD-VM2D | ● | ● | ● | ● | ● | ● | ● | ● | ● | ● | ● | ● | ● | | | | | | | | | | | | |
| | EHSD-VM6D | ● | ● | ● | ● | ● | ● | ● | ● | ● | ● | ● | ● | ● | | | | | | | | | | | | |
| | EHSD-YM9D | ● | ● | ● | ● | ● | ● | ● | ● | ● | ● | ● | ● | ● | | | | | | | | | | | | |
| | EHSD-YM9ED | ● | ● | ● | ● | ● | ● | ● | ● | ● | ● | ● | ● | ● | | | | | | | | | | | | |
| | EHSD-TM9D | ● | ● | ● | ● | ● | ● | ● | ● | ● | ● | ● | ● | ● | | | | | | | | | | | | |
| | EHSC-MED | | | | | | | | | | | | | | ● | ● | | | ● | ● | ● | | ● | | | |
| | EHSC-VM2D | | | | | | | | | | | | | | ● | ● | | | ● | ● | ● | | ● | ● | ● | ● |
| | EHSC-VM6D | | | | | | | | | | | | | | ● | ● | | | ● | ● | ● | | ● | ● | ● | ● |
| | EHSC-YM9D | | | | | | | | | | | | | | ● | ● | | | ● | ● | ● | | ● | ● | ● | ● |
| | EHSC-YM9ED | | | | | | | | | | | | | | ● | ● | | | ● | ● | ● | | ● | ● | ● | ● |
| | EHSC-TM9D | | | | | | | | | | | | | | ● | ● | | | ● | ● | ● | | ● | ● | ● | ● |
| | EHSE-YM9ED | | | | | | | | | | | | | | | | ● | ● | | | | ● | | | | |
| | EHSE-MED | | | | | | | | | | | | | | | | ● | ● | | | | ● | | | | |
| Reversible Hydro box | ERSD-MED | ● | ● | ● | ● | ● | ● | ● | ● | ● | ● | ● | ● | ● | | | | | | | | | | | | |
| | ERSD-VM2D | ● | ● | ● | ● | ● | ● | ● | ● | ● | ● | ● | ● | ● | | | | | | | | | | | | |
| | ERSC-MED | | | | | | | | | | | | | | ● | ● | | | ● | ● | ● | | | | | |
| | ERSC-VM2D | | | | | | | | | | | | | | ● | ● | | | ● | ● | ● | | | | | |
| | ERSE-YM9ED | | | | | | | | | | | | | | | | ● | ● | | | | ● | | | | |
| | ERSE-MED | | | | | | | | | | | | | | | | ● | ● | | | | ● | | | | |

### Packaged indoor/outdoor unit

| Packaged indoor/outdoor unit combination | | R32 | | | |
|---|---|---|---|---|---|
| | | Power inverter | | | |
| | | PUZ-WM50VHA | PUZ-WM60VAA | PUZ-WM85V/YAA | PUZ-WM112V/YAA |
| Heating only Cylinder | EHPT17X-VM2D | ● | ● | ● | |
| | EHPT17X-VM6D | ● | ● | ● | |
| | EHPT17X-YM9D | ● | ● | ● | |
| | EHPT20X-MED | ● | ● | ● | ● |
| | EHPT20X-VM6D | ● | ● | ● | ● |
| | EHPT20X-YM9D | ● | ● | ● | ● |
| | EHPT20X-YM9ED | ● | ● | ● | ● |
| | EHPT20X-TM9D | ● | ● | ● | ● |
| | EHPT20X-MHEDW | ● | ● | ● | ● |
| | EHPT30X-MED | | | ● | ● |
| | EHPT30X-YM9ED | | | ● | ● |
| Reversible Cylinder | ERPT17X-VM2D | ● | ● | ● | |
| | ERPT20X-VM2D | ● | ● | ● | ● |
| | ERPT20X-MD | ● | ● | ● | ● |
| | ERPT20X-VM6D | ● | ● | ● | ● |
| | ERPT30X-VM2ED | | | ● | ● |
| Heating only Hydro box | EHPX-VM2D | ● | ● | ● | ● |
| | EHPX-VM6D | ● | ● | ● | ● |
| | EHPX-YM9D | ● | ● | ● | ● |
| | EHPX-MED | ● | ● | ● | ● |
| | EHPX-YM9ED | ● | ● | ● | ● |

# MELCloud (Wi-Fi Interface) for ecodan

## MELCloud for Fast, Easy Remote Control and Monitoring of Your ecodan

MELCloud is a new Cloud-based solution for controlling ecodan either locally or remotely by computer, tablet or smartphone via the Internet. Setting up and remotely operating your ecodan heating system via MELCloud is simple and straight forward. All you need is wireless computer connectivity in your home or the building where the ecodan is installed and an Internet connection on your mobile or fixed terminal. To set up the system, the router and the ecodan WiFi interface must be paired, and this is done simply and quickly using the WPS button found on all mainstream routers.
You can control and check ecodan via MELCloud from virtually anywhere an Internet connection is available.
That means, thanks to MELCloud, you can use ecodan much more easily and conveniently.

* MELCloud uses the MAC-567IF-E interface

## Key Control and Monitoring Features

1. **Turn system on/off**
2. **See status of each of your heating zones & adjust set points**
3. **See the status of your hot water cylinder & boost remotely**
4. **Live weather feed from ecodan location**

   Holiday mode - Set system parameters while away
   Schedule timer - Set 7 day weekly schedule
   Frost protection - Set system to run at minimum temperature
   Error status
5. **Check energy usage report*** *Additional metering hardware is required.

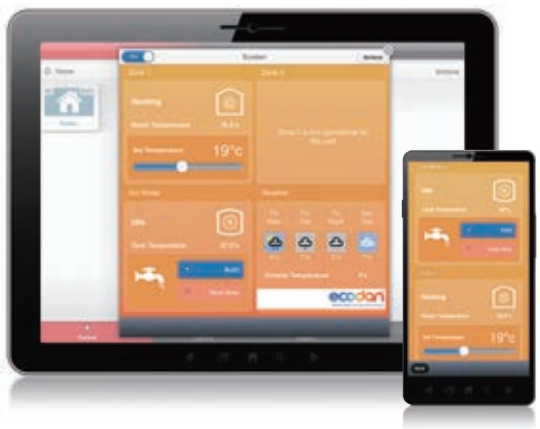

## All A++ or Above!!

| Outdoor unit | Indoor unit | For medium-temperature application | | | | | | | For low-temperature application | | | | | | |
|---|---|---|---|---|---|---|---|---|---|---|---|---|---|---|---|
| | | Seasonal space heating energy efficiency class | Water heating energy efficiency class | Rated heat output under average climate conditions | Seasonal space heating energy efficiency under average climate conditions | Water heating energy efficiency under average climate conditions | Sound power level LWA indoor | Sound power level LWA outdoor | Seasonal space heating energy efficiency class | Water heating energy efficiency class | Rated heat output under average climate conditions | Seasonal space heating energy efficiency under average climate conditions | Water heating energy efficiency under average climate conditions | Sound power level LWA indoor | Sound power level LWA outdoor |
| | | | | kW | % | % | dB | dB | | | kW | % | % | dB | dB |
| SUZ-SWM40VA | EHST17D-***D | A++ | A+ | 4.6 | 129 | 148 | 41 | 58 | A+++ | A+ | 5.1 | 180 | 148 | 41 | 58 |
| | ERST17D-***D | A++ | A+ | 4.6 | 132 | 148 | 41 | 58 | A+++ | A+ | 5.1 | 187 | 148 | 41 | 58 |
| | EHST20D-***D | A++ | A+ | 4.6 | 129 | 159 | 41 | 58 | A+++ | A+ | 5.1 | 180 | 159 | 41 | 58 |
| | ERST20D-***D | A++ | A+ | 4.6 | 132 | 159 | 41 | 58 | A+++ | A+ | 5.1 | 187 | 159 | 41 | 58 |
| | EHSD-***D | A++ | – | 4.6 | 129 | – | 41 | 58 | A+++ | – | 5.1 | 180 | – | 41 | 58 |
| | ERSD-***D | A++ | – | 4.6 | 132 | – | 41 | 58 | A+++ | – | 5.1 | 187 | – | 41 | 58 |
| SUZ-SWM60VA | EHST17D-***D | A++ | A+ | 6.0 | 130 | 144 | 41 | 60 | A+++ | A+ | 6.6 | 181 | 144 | 41 | 60 |
| | ERST17D-***D | A++ | A+ | 6.0 | 133 | 144 | 41 | 60 | A+++ | A+ | 6.6 | 187 | 144 | 41 | 60 |
| | EHST20D-***D | A++ | A+ | 6.0 | 130 | 148 | 41 | 60 | A+++ | A+ | 6.6 | 181 | 148 | 41 | 60 |
| | ERST20D-***D | A++ | A+ | 6.0 | 133 | 148 | 41 | 60 | A+++ | A+ | 6.6 | 187 | 148 | 41 | 60 |
| | EHSD-***D | A++ | – | 6.0 | 130 | – | 41 | 60 | A+++ | – | 6.6 | 181 | – | 41 | 60 |
| | ERSD-***D | A++ | – | 6.0 | 133 | – | 41 | 60 | A+++ | – | 6.6 | 187 | – | 41 | 60 |
| SUZ-SWM80VA | EHST17D-***D | A++ | A+ | 7.1 | 131 | 144 | 41 | 62 | A+++ | A+ | 7.1 | 182 | 144 | 41 | 62 |
| | ERST17D-***D | A++ | A+ | 7.1 | 133 | 144 | 41 | 62 | A+++ | A+ | 7.1 | 187 | 144 | 41 | 62 |
| | EHST20D-***D | A++ | A+ | 7.1 | 131 | 148 | 41 | 62 | A+++ | A+ | 7.1 | 182 | 148 | 41 | 62 |
| | ERST20D-***D | A++ | A+ | 7.1 | 133 | 148 | 41 | 62 | A+++ | A+ | 7.1 | 187 | 148 | 41 | 62 |
| | EHST30D-***D | A++ | A+ | 7.1 | 131 | 127 | 41 | 62 | A+++ | A+ | 7.1 | 182 | 127 | 41 | 62 |
| | ERST30D-***D | A++ | A+ | 7.1 | 133 | 127 | 41 | 62 | A+++ | A+ | 7.1 | 187 | 127 | 41 | 62 |
| | EHSD-***D | A++ | – | 7.1 | 131 | – | 41 | 62 | A+++ | – | 7.1 | 182 | – | 41 | 62 |
| | ERSD-***D | A++ | – | 7.1 | 133 | – | 41 | 62 | A+++ | – | 7.1 | 187 | – | 41 | 62 |
| PUD-SWM60VAA | E*ST17D-***D | A++ | A+ | 6.0 | 130 | 136 | 41 | 55 | A+++ | A+ | 6.0 | 175 | 136 | 41 | 55 |
| | E*ST20D-***D | A++ | A+ | 6.0 | 130 | 148 | 41 | 55 | A+++ | A+ | 6.0 | 175 | 148 | 41 | 55 |
| | E*ST30D-***D | A++ | A | 6.0 | 130 | 121 | 41 | 55 | A+++ | A | 6.0 | 175 | 121 | 41 | 55 |
| | E*SD-***D | A++ | – | 6.0 | 130 | – | 41 | 55 | A+++ | – | 6.0 | 175 | – | 41 | 55 |
| PUD-SWM80V/YAA | E*ST17D-***D | A++ | A+ | 8.0 | 131/130 | 136 | 41 | 56 | A+++ | A+ | 8.0 | 178/176 | 136 | 41 | 56 |
| | E*ST20D-***D | A++ | A+ | 8.0 | 131/130 | 148 | 41 | 56 | A+++ | A+ | 8.0 | 178/176 | 148 | 41 | 56 |
| | E*ST30D-***D | A++ | A | 8.0 | 131/130 | 121 | 41 | 56 | A+++ | A | 8.0 | 178/176 | 121 | 41 | 56 |
| | E*SD-***D | A++ | – | 8.0 | 131/130 | – | 41 | 56 | A+++ | – | 8.0 | 178/176 | – | 41 | 56 |
| PUD-SWM100V/YAA | E*ST20D-***D | A++ | A+ | 10.0 | 131/130 | 148 | 41 | 59 | A+++ | A+ | 10.0 | 178/177 | 148 | 41 | 59 |
| | E*ST30D-***D | A++ | A | 10.0 | 131/130 | 121 | 41 | 59 | A+++ | A | 10.0 | 178/177 | 121 | 41 | 59 |
| | E*SD-***D | A++ | – | 10.0 | 131/130 | – | 41 | 59 | A+++ | – | 10.0 | 178/177 | – | 41 | 59 |
| PUD-SWM120V/YAA | E*ST20D-***D | A++ | A+ | 12.0 | 129/128 | 148 | 41 | 60 | A+++ | A+ | 12.0 | 177/176 | 148 | 41 | 60 |
| | E*ST30D-***D | A++ | A | 12.0 | 129/128 | 121 | 41 | 60 | A+++ | A | 12.0 | 177/176 | 121 | 41 | 60 |
| | E*SD-***D | A++ | – | 12.0 | 129/128 | – | 41 | 60 | A+++ | – | 12.0 | 177/176 | – | 41 | 60 |
| PUD-SHWM60VAA | E*ST17D-***D | A++ | A+ | 6.0 | 134 | 136 | 41 | 55 | A+++ | A+ | 6.0 | 178 | 136 | 41 | 55 |
| | E*ST20D-***D | A++ | A+ | 6.0 | 134 | 148 | 41 | 55 | A+++ | A+ | 6.0 | 178 | 148 | 41 | 55 |
| | E*ST30D-***D | A++ | A | 6.0 | 134 | 121 | 41 | 55 | A+++ | A | 6.0 | 178 | 121 | 41 | 55 |
| | E*SD-***D | A++ | – | 6.0 | 134 | – | 41 | 55 | A+++ | – | 6.0 | 178 | – | 41 | 55 |
| PUD-SHWM80V/YAA | E*ST17D-***D | A++ | A+ | 8.0 | 135/134 | 136 | 41 | 56 | A+++ | A+ | 8.0 | 181/179 | 136 | 41 | 56 |
| | E*ST20D-***D | A++ | A+ | 8.0 | 135/134 | 148 | 41 | 56 | A+++ | A+ | 8.0 | 181/179 | 148 | 41 | 56 |
| | E*ST30D-***D | A++ | A | 8.0 | 135/134 | 121 | 41 | 56 | A+++ | A | 8.0 | 181/179 | 121 | 41 | 56 |
| | E*SD-***D | A++ | – | 8.0 | 135/134 | – | 41 | 56 | A+++ | – | 8.0 | 181/179 | – | 41 | 56 |

Note: E**T17/20*-***D use “Load profile L”.
E**T30*-***D use “Load profile XL”.

## All A++ or Above!!

| Outdoor unit | Indoor unit | For medium-temperature application | | | | | | | For low-temperature application | | | | | | |
|---|---|---|---|---|---|---|---|---|---|---|---|---|---|---|---|
| | | Seasonal space heating energy efficiency class | Water heating energy efficiency class | Rated heat output under average climate conditions | Seasonal space heating energy efficiency under average climate conditions | Water heating energy efficiency under average climate conditions | Sound power level LWA indoor | Sound power level LWA outdoor | Seasonal space heating energy efficiency class | Water heating energy efficiency class | Rated heat output under average climate conditions | Seasonal space heating energy efficiency under average climate conditions | Water heating energy efficiency under average climate conditions | Sound power level LWA indoor | Sound power level LWA outdoor |
| | | | | kW | % | % | dB | dB | | | kW | % | % | dB | dB |
| PUD-SHWM100V/YAA | E*ST20D-***D | A++ | A+ | 10.0 | 136/135 | 148 | 41 | 59 | A+++ | A+ | 10.0 | 180/178 | 148 | 41 | 59 |
| | E*ST30D-***D | A++ | A | 10.0 | 136/135 | 121 | 41 | 59 | A+++ | A | 10.0 | 180/178 | 121 | 41 | 59 |
| | E*SD-***D | A++ | – | 10.0 | 136/135 | – | 41 | 59 | A+++ | – | 10.0 | 180/178 | – | 41 | 59 |
| PUD-SHWM120V/YAA | E*ST20D-***D | A++ | A+ | 12.0 | 135/134 | 148 | 41 | 60 | A+++ | A+ | 12.0 | 179/177 | 148 | 41 | 60 |
| | E*ST30D-***D | A++ | A | 12.0 | 135/134 | 121 | 41 | 60 | A+++ | A | 12.0 | 179/177 | 121 | 41 | 60 |
| | E*SD-***D | A++ | – | 12.0 | 135/134 | – | 41 | 60 | A+++ | – | 12.0 | 179/177 | – | 41 | 60 |
| PUD-SHWM140V/YAA | E*ST20D-***D | A++ | A+ | 14.0 | 134/134 | 145 | 41 | 62 | A+++ | A+ | 14.0 | 179/177 | 145 | 41 | 62 |
| | E*ST30D-***D | A++ | A | 14.0 | 134/134 | 121 | 41 | 62 | A+++ | A | 14.0 | 179/177 | 121 | 41 | 62 |
| | E*SD-***D | A++ | – | 14.0 | 134/134 | – | 41 | 62 | A+++ | – | 14.0 | 179/177 | – | 41 | 62 |
| PUHZ-SW75V/YAA | EHST17D-***D | A++ | A+ | 7.1 | 129 | 136 | 41 | 58 | A++ | A+ | 7.2 | 162 | 136 | 41 | 58 |
| | ERST17D-***D | A++ | A+ | 7.1 | 132 | 136 | 41 | 58 | A++ | A+ | 7.2 | 166 | 136 | 41 | 58 |
| | EHST20D-***D | A++ | A+ | 7.1 | 129 | 145 | 41 | 58 | A++ | A+ | 7.2 | 162 | 145 | 41 | 58 |
| | ERST20D-***D | A++ | A+ | 7.1 | 132 | 145 | 41 | 58 | A++ | A+ | 7.2 | 166 | 145 | 41 | 58 |
| | EHST30D-***D | A++ | A | 7.1 | 129 | 120 | 41 | 58 | A++ | A | 7.2 | 162 | 120 | 41 | 58 |
| | ERST30D-***D | A++ | A | 7.1 | 132 | 120 | 41 | 58 | A++ | A | 7.2 | 166 | 120 | 41 | 58 |
| | EHSD-***D | A++ | – | 7.1 | 129 | – | 41 | 58 | A++ | – | 7.2 | 162 | – | 41 | 58 |
| | ERSD-***D | A++ | – | 7.1 | 132 | – | 41 | 58 | A++ | – | 7.2 | 166 | – | 41 | 58 |
| PUHZ-SW100V/YAA | EHST20C-***D | A++ | A+ | 10.0 | 130 | 145 | 40 | 60 | A++ | A+ | 10.6 | 167 | 145 | 40 | 60 |
| | ERST20C-***D | A++ | A+ | 10.0 | 132 | 145 | 40 | 60 | A++ | A+ | 10.6 | 170 | 145 | 40 | 60 |
| | EHST30C-***D | A++ | A | 10.0 | 130 | 120 | 40 | 60 | A++ | A | 10.6 | 167 | 120 | 40 | 60 |
| | ERST30C-***D | A++ | A | 10.0 | 132 | 120 | 40 | 60 | A++ | A | 10.6 | 170 | 120 | 40 | 60 |
| | EHSC-***D | A++ | – | 10.0 | 130 | – | 40 | 60 | A++ | – | 10.6 | 167 | – | 40 | 60 |
| | ERSC-***D | A++ | – | 10.0 | 132 | – | 40 | 60 | A++ | – | 10.6 | 170 | – | 40 | 60 |
| PUHZ-SW120V/YHA | EHST20C-***D | A++ | A+ | 12.0 | 125 | 138 | 40 | 72 | A++ | A+ | 12.9 | 162 | 138 | 40 | 72 |
| | ERST20C-***D | A++ | A+ | 12.0 | 127 | 138 | 40 | 72 | A++ | A+ | 12.9 | 164 | 138 | 40 | 72 |
| | EHST30C-***D | A++ | A | 12.0 | 125 | 118 | 40 | 72 | A++ | A | 12.9 | 162 | 118 | 40 | 72 |
| | ERST30C-***D | A++ | A | 12.0 | 127 | 118 | 40 | 72 | A++ | A | 12.9 | 164 | 118 | 40 | 72 |
| | EHSC-***D | A++ | – | 12.0 | 125 | – | 40 | 72 | A++ | – | 12.9 | 162 | – | 40 | 72 |
| | ERSC-***D | A++ | – | 12.0 | 127 | – | 40 | 72 | A++ | – | 12.9 | 164 | – | 40 | 72 |
| PUHZ-SW160YKA | EHSE-***D | A++ | – | 13.5 | 125 | – | 45 | 78 | A++ | – | 15.3 | 161 | – | 45 | 78 |
| | ERSE-***D | A++ | – | 13.5 | 126 | – | 45 | 78 | A++ | – | 15.3 | 163 | – | 45 | 78 |
| PUHZ-SW200YKA | EHSE-***D | A++ | – | 15.5 | 127 | – | 45 | 78 | A++ | – | 17.3 | 163 | – | 45 | 78 |
| | ERSE-***D | A++ | – | 15.5 | 129 | – | 45 | 78 | A++ | – | 17.3 | 164 | – | 45 | 78 |
| PUHZ-SHW80V/YAA | EHST20C-***D | A++ | A+ | 9.0 | 133 | 145 | 40 | 59 | A++ | A+ | 9.6 | 169 | 145 | 40 | 59 |
| | ERST20C-***D | A++ | A+ | 9.0 | 135 | 145 | 40 | 59 | A++ | A+ | 9.6 | 172 | 145 | 40 | 59 |
| | EHST30C-***D | A++ | A | 9.0 | 133 | 120 | 40 | 59 | A++ | A | 9.6 | 169 | 120 | 40 | 59 |
| | ERST30C-***D | A++ | A | 9.0 | 135 | 120 | 40 | 59 | A++ | A | 9.6 | 172 | 120 | 40 | 59 |
| | EHSC-***D | A++ | – | 9.0 | 133 | – | 40 | 59 | A++ | – | 9.6 | 169 | – | 40 | 59 |
| | ERSC-***D | A++ | – | 9.0 | 135 | – | 40 | 59 | A++ | – | 9.6 | 172 | – | 40 | 59 |
| PUHZ-SHW112V/YAA | EHST20C-***D | A++ | A+ | 12.7 | 135 | 145 | 40 | 60 | A++ | A+ | 13.9 | 171 | 145 | 40 | 60 |
| | ERST20C-***D | A++ | A+ | 12.7 | 137 | 145 | 40 | 60 | A++ | A+ | 13.9 | 173 | 145 | 40 | 60 |
| | EHST30C-***D | A++ | A | 12.7 | 135 | 120 | 40 | 60 | A++ | A | 13.9 | 171 | 120 | 40 | 60 |
| | ERST30C-***D | A++ | A | 12.7 | 137 | 120 | 40 | 60 | A++ | A | 13.9 | 173 | 120 | 40 | 60 |
| | EHSC-***D | A++ | – | 12.7 | 135 | – | 40 | 60 | A++ | – | 13.9 | 171 | – | 40 | 60 |
| | ERSC-***D | A++ | – | 12.7 | 137 | – | 40 | 60 | A++ | – | 13.9 | 173 | – | 40 | 60 |

| | | For medium-temperature application | | | | | | | For low-temperature application | | | | | | |
|---|---|---|---|---|---|---|---|---|---|---|---|---|---|---|---|
| Outdoor unit | Indoor unit | Seasonal space heating energy efficiency class | Water heating energy efficiency class | Rated heat output under average climate conditions | Seasonal space heating energy efficiency under average climate conditions | Water heating energy efficiency under average climate conditions | Sound power level LWA indoor | Sound power level LWA outdoor | Seasonal space heating energy efficiency class | Water heating energy efficiency class | Rated heat output under average climate conditions | Seasonal space heating energy efficiency under average climate conditions | Water heating energy efficiency under average climate conditions | Sound power level LWA indoor | Sound power level LWA outdoor |
| | | | | kW | % | % | dB | dB | | | kW | % | % | dB | dB |
| PUHZ-SHW140YHA | EHST20C-***D | A++ | A+ | 15.8 | 127 | 138 | 40 | 70 | A++ | A+ | 17.0 | 163 | 138 | 40 | 70 |
| | ERST20C-***D | A++ | A+ | 15.8 | 128 | 138 | 40 | 70 | A++ | A+ | 17.0 | 165 | 138 | 40 | 70 |
| | EHST30C-***D | A++ | A+ | 15.8 | 127 | 118 | 40 | 70 | A++ | A+ | 17.0 | 163 | 118 | 40 | 70 |
| | ERST30C-***D | A++ | A+ | 15.8 | 128 | 118 | 40 | 70 | A++ | A+ | 17.0 | 165 | 118 | 40 | 70 |
| | EHSC-***D | A++ | – | 15.8 | 127 | – | 40 | 70 | A++ | – | 17.0 | 163 | – | 40 | 70 |
| | ERSC-***D | A++ | – | 15.8 | 128 | – | 40 | 70 | A++ | – | 17.0 | 165 | – | 40 | 70 |
| PUHZ-SHW230YKA2 | EHSE-***D | A++ | – | 23.0 | 127 | – | 45 | 75 | A++ | – | 25.0 | 164 | – | 45 | 75 |
| | ERSE-***D | A++ | – | 23.0 | 128 | – | 45 | 75 | A++ | – | 25.0 | 165 | – | 45 | 75 |
| PUZ-WM50VHA | EHPT17X-***D | A++ | A+ | 5.0 | 129 | 148 | 40 | 61 | A+++ | A+ | 5.0 | 183 | 148 | 40 | 61 |
| | ERPT17X-***D | A++ | A+ | 5.0 | 133 | 148 | 40 | 61 | A+++ | A+ | 5.0 | 190 | 148 | 40 | 61 |
| | EHPT20X-***D | A++ | A+ | 5.0 | 129 | 135 | 40 | 61 | A+++ | A+ | 5.0 | 183 | 135 | 40 | 61 |
| | ERPT20X-***D | A++ | A+ | 5.0 | 133 | 135 | 40 | 61 | A+++ | A+ | 5.0 | 190 | 135 | 40 | 61 |
| | EHPX-***D | A++ | – | 5.0 | 129 | – | 40 | 61 | A+++ | – | 6.0 | 190 | – | 40 | 61 |
| PUZ-WM60VAA | EHPT17X-***D | A++ | A+ | 6.0 | 142 | 144 | 40 | 58 | A+++ | A+ | 6.0 | 190 | 144 | 40 | 58 |
| | ERPT17X-***D | A++ | A+ | 6.0 | 145 | 144 | 40 | 58 | A+++ | A+ | 6.0 | 197 | 144 | 40 | 58 |
| | EHPT20X-***D | A++ | A+ | 6.0 | 142 | 145 | 40 | 58 | A+++ | A+ | 6.0 | 190 | 145 | 40 | 58 |
| | ERPT20X-***D | A++ | A+ | 6.0 | 145 | 145 | 40 | 58 | A+++ | A+ | 6.0 | 197 | 145 | 40 | 58 |
| | EHPX-***D | A++ | – | 6.0 | 142 | – | 40 | 58 | A+++ | – | 6.0 | 190 | – | 40 | 58 |
| PUZ-WM85V/YAA | EHPT17X-***D | A++ | A+ | 8.5 | 139/138 | 144 | 40 | 58 | A+++ | A+ | 8.5 | 193/190 | 144 | 40 | 58 |
| | ERPT17X-***D | A++ | A+ | 8.5 | 141 | 144 | 40 | 58 | A+++ | A+ | 8.5 | 197 | 144 | 40 | 58 |
| | EHPT20X-***D | A++ | A+ | 8.5 | 139/138 | 145 | 40 | 58 | A+++ | A+ | 8.5 | 193/190 | 145 | 40 | 58 |
| | ERPT20X-***D | A++ | A+ | 8.5 | 141 | 145 | 40 | 58 | A+++ | A+ | 8.5 | 197 | 145 | 40 | 58 |
| | EHPT30X-***D | A++ | A | 8.5 | 139/138 | 120 | 40 | 58 | A+++ | A | 8.5 | 193/190 | 120 | 40 | 58 |
| | ERPT30X-***D | A++ | A | 8.6 | 141 | 120 | 40 | 58 | A+++ | A | 8.5 | 197 | 120 | 40 | 58 |
| | EHPX-***D | A++ | – | 8.5 | 139/138 | – | 40 | 58 | A+++ | – | 8.5 | 193/190 | – | 40 | 58 |
| PUZ-WM112V/YAA | EHPT20X-***D | A++ | A+ | 10.0 | 134/133 | 148 | 40 | 60 | A+++ | A+ | 10.0 | 191/189 | 148 | 40 | 60 |
| | ERPT20X-***D | A++ | A+ | 10.0 | 136 | 148 | 40 | 60 | A+++ | A+ | 10.0 | 195 | 148 | 40 | 60 |
| | EHPT30X-***D | A++ | A | 10.0 | 134/133 | 120 | 40 | 60 | A+++ | A | 10.0 | 191/189 | 120 | 40 | 60 |
| | ERPT30X-***D | A++ | A | 10.0 | 136 | 120 | 40 | 60 | A+++ | A | 10.0 | 195 | 120 | 40 | 60 |
| | EHPX-***D | A++ | – | 10.0 | 134/133 | – | 40 | 60 | A+++ | – | 10.0 | 191/189 | – | 40 | 60 |
| PUHZ-FRP71VHA2 | EHST20C-***D | A+ | A+ | 7.5 | 121 | 138 | 40 | 68 | A++ | A+ | 7.5 | 163 | 138 | 40 | 68 |
| | EHSC-***D | A+ | – | 7.5 | 121 | – | 40 | 68 | A++ | – | 7.5 | 163 | – | 40 | 68 |
| PUMY-P112VKM3/YKM(E)4 | EHST20C-***D | A+ | A | 11.2 | 121 | 106 | 40 | 69 | A++ | A | 11.2 | 168 | 106 | 40 | 69 |
| | EHSC-***D | A+ | – | 11.2 | 121 | – | 40 | 69 | A++ | – | 11.2 | 168 | – | 40 | 69 |
| PUMY-P125VKM3/YKM(E)4 | EHST20C-***D | A+ | A | 11.2 | 121 | 106 | 40 | 69 | A++ | A | 11.2 | 168 | 106 | 40 | 69 |
| | EHSC-***D | A+ | – | 11.2 | 121 | – | 40 | 69 | A++ | – | 11.2 | 168 | – | 40 | 69 |
| PUMY-P140VKM3/YKM(E)4 | EHST20C-***D | A+ | A | 11.2 | 121 | 106 | 40 | 69 | A++ | A | 11.2 | 168 | 106 | 40 | 69 |
| | EHSC-***D | A+ | – | 11.2 | 121 | – | 40 | 69 | A++ | – | 11.2 | 168 | – | 40 | 69 |

Note: E**T17/20*-***D use “Load profile L”.
E**T30*-***D use “Load profile XL”.

# NEW ECODESIGN DIRECTIVE

## WHAT IS THE ErP DIRECTIVE?

The Ecodesign Directive for Energy-related Products (ErP Directive) establishes a framework to set mandatory standards for ErPs sold in the European Union (EU). The ErP directive introduces new energy-efficiency ratings across various product categories and affects how products such as computers, vacuum cleaners, boilers and even windows are classified in terms of environmental performance.
Regulations that apply to air conditioning systems of rated capacity up to 12kW came into effect as of January 1, 2013. Based the use of future-orientated technologies, Mitsubishi Electric is one step ahead of these changes, with our air conditioning systems already achieving compliance with these new regulations.

## NEW ENERGY LABEL AND MEASUREMENTS

Under regulation 2011/626/EU, supplementing directive 2010/30/EU, air conditioning systems are newly classified into energy-efficiency classes on the basis of a new energy labelling system, which includes three new classes: $A^{+}$, $A^{++}$ and $A^{+++}$.
Revisions to the measurement points and calculations of the seasonal energy efficiency ratio (SEER) and seasonal coefficient of performance (SCOP) has resulted in changes to how air conditioning systems are classified into energy-efficiency classes.
Specifically, for cooling mode, air conditioning systems must achieve at least class B. For heating mode, air conditioning systems must achieve at least a SCOP value of 3.8.

### ■New Energy Efficiency Label

**SEER and SCOP**
The SEER (Seasonal Energy Efficiency Ratio) value indicates the seasonal energy efficiency value in the cooling mode. The SCOP (Seasonal Coefficient of Performance) value refers to the seasonal efficiency in the heating mode.

**Energy efficiency classes from A+++ to D SCOP in heating mode**

| | |
|---|---|
| A+++ | > 5,1 |
| A++ | > 4,6 |
| A+ | > 4,0 |
| A | > 3,4 |
| B | > 3,1 |
| C | > 2,8 |
| D | < 2,5 |

**Energy efficiency classes from A+++ to D SEER in cooling mode**

| | |
|---|---|
| A+++ | > 8,5 |
| A++ | > 6,1 |
| A+ | > 5,6 |
| A | > 5,1 |
| B | > 4,6 |
| C | > 4,1 |
| D | < 3,6 |

**Energy efficiency class**
Energy efficiency class of the unit in cooling and heating mode of the unit model

In the heating mode, the indication for the unit model is shown for all three climate zones.

**Nominal capacity in cooling mode**
**SEER value**
**Annual power consumption for cooling**

**Operating noise, indoors/outdoors**
The sound power level is an important sound energy parameter for assessing a sound source. Contrary to the sound pressure - the sound power is independent of the location of the source and/or the receiver. Maximally admissible values are:

| Cooling capacity ≤ 6 kW | | Cooling capacity > 6 kW ≤ 12 kW | |
|---|---|---|---|
| Indoor unit | Outdoor unit | Indoor unit | Outdoor unit |
| 60dB(A) | 65dB(A) | 65dB(A) | 70dB(A) |

**Name or trademark of the manufacturer**
**Name of the unit/designation of model**

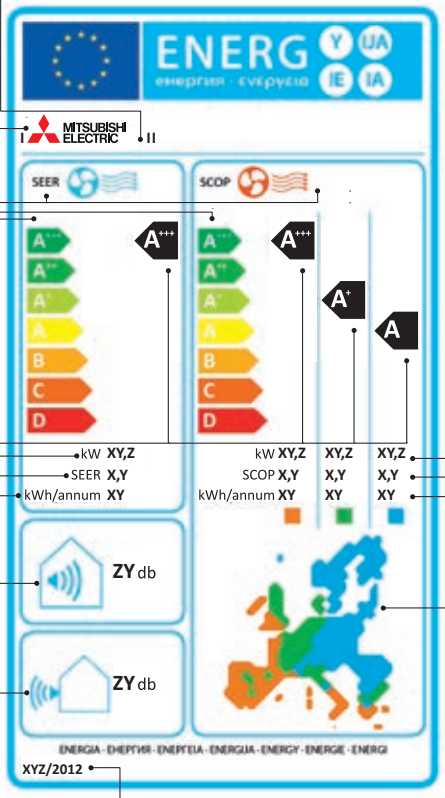


**Time reference**
Indication on label data

**Nominal capacity in heating mode**
**SCOP value**
**Annual power consumption for heating**

**Climate zones**
For heating mode, the EU is divided into three climate zones for calculation and classification purposes. This aims at calculating the energy efficiency taking into consideration the actual regional ambient temperatures.

### ■Climate Zones for Heating Mode

**Reference climate zones for calculating the SCOP**
Since the climate conditions have a great influence on the operating behaviour in the heat pump mode, three climate zones have been stipulated for the EU: warm, moderate, cold. The measurement points are homogenous at 12°C, 7°C, 2°C and –7°C.

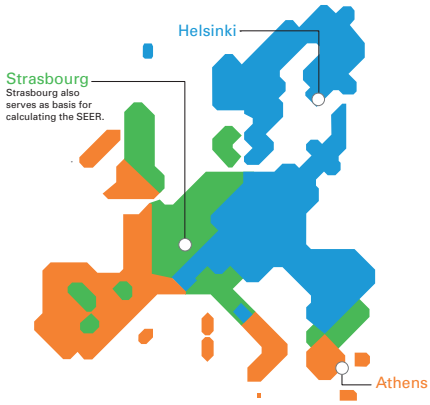


**Warm (Athens)**

| Partial load | Temperature conditions Outdoors DB | Outdoors WB | Indoors DB |
|---|---|---|---|
| – | – | – | 20°C |
| 100% | 2°C | 1°C | 20°C |
| 64% | 7°C | 6°C | 20°C |
| 29% | 12°C | 11°C | 20°C |

**Moderate (Strasbourg)**

| Partial load | Temperature conditions Outdoors DB | Outdoors WB | Indoors DB |
|---|---|---|---|
| 88% | –7°C | –8°C | 20°C |
| 54% | 2°C | 1°C | 20°C |
| 35% | 7°C | 6°C | 20°C |
| 15% | 12°C | 11°C | 20°C |

**Cold (Helsinki)**

| Partial load | Temperature conditions Outdoors DB | Outdoors WB | Indoors DB |
|---|---|---|---|
| 61% | –7°C | –8°C | 20°C |
| 37% | 2°C | 1°C | 20°C |
| 24% | 7°C | 6°C | 20°C |
| 11% | 12°C | 11°C | 20°C |

## SEER/SCOP

Air conditioning systems were previously assessed using the energy-efficiency rating (EER), which evaluated efficiency in cooling mode, and the coefficient of performance (COP), which defined the efficiency, or the ratio of consumed and output power, in heating mode. Under this system, assessments were not truly reflective of performance as they were based on a single measurement point, which led to manufacturers optimising products accordingly in order to achieve higher efficiency ratings. SEER and SCOP address this problem by including seasonal variation in the ratings via use of realistic measurement points. For cooling mode, measurements at outside temperatures of 20, 25, 30 and 35°C are incorporated and weighted in accordance with climate data for Strasbourg, which is used as a single reference point for the whole EU. For instance, for partial-load operation, which represents more than 90% of operation, there is a correspondingly high weighting for the efficiency classification. For heating mode, a comprehensive temperature profile for the whole EU was not possible, so the EU has been divided into three climate zones, north, central and south, and load profiles created. The same measurement points, at outside temperatures of 12, 7, 2 and –7°C, are used for all three zones.

■SCOP Calculation

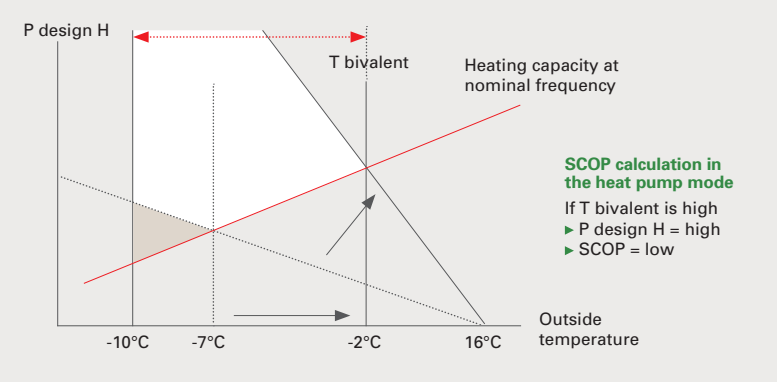


### Technical Terms with Respect to the SCOP

**P design H:** Corresponds to a heating load of 100%. The value depends on the selected bivalence point.

**T design:** Outside temperature which determines the P design H point. The latter is determined from the area conditions.

**T bivalent:** Corresponds to the lowest temperature at which full heating performance can be achieved with the heat pump (without additional heating). This point can be freely selected within the prescribed temperature ranges (T design - T bivalent).

## SOUND PRESSURE LEVEL

Consumers will also receive more information on the noise levels emitted by split-system air conditioners to help them make their purchasing decision. Specifically, the sound power level of indoor and outdoor units is to be indicated in decibels as an objective parameter. Knowing the sound power makes it possible to calculate sound emissions while considering distance and radiation characteristics, which is beneficial because it allows the noise levels of different air conditioning systems to be compared regardless of the usage location and how the sound pressure is measured. This is an improvement on sound pressure values which are usually measured at an approximate distance of 1m where all modern split-system air conditioning systems tend to be very quiet at an average of 21 decibels.

■Sound Pressure vs Sound Power Level

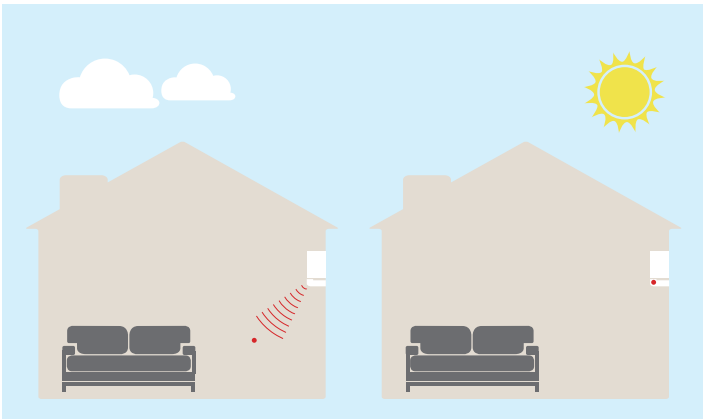

**Sound pressure level dB(A)**
The sound pressure level is a sound field parameter which indicates the perceived operating noise of an indoor unit within a certain distance.

**Sound power level dB(A)**
The sound power is an acoustic parameter which describes the source strength of a sound generator and is thus independent of the distance to the receiver location.

# DC Inverter INVERTER TECHNOLOGIES

Mitsubishi Electric inverters ensure superior performance including the optimum control of operation frequency. As a result, optimum power is applied in all heating/cooling ranges and maximum comfort is achieved while consuming minimal energy. Fast, comfortable operation and amazingly low running cost — That's the Mitsubishi Electric promise.

## INVERTERS — HOW THEY WORK

Inverters electronically control the electrical voltage, current and frequency of electrical devices such as the compressor motor in an air conditioner. They receive information from sensors monitoring operating conditions, and adjust the revolution speed of the compressor, which directly regulates air conditioner output. Optimum control of operation frequency results in eliminating the consumption of excessive electricity and providing the most comfortable room environment.

## ECONOMIC OPERATION

Impressively low operating cost is a key advantage of inverter air conditioners. We've combined advanced inverter technologies with cutting-edge electronics and mechanical technologies to achieve a synergistic effect that enables improvements in heating/cooling performance efficiency. Better performance and lower energy consumption are the result.

## TRUE COMFORT

Below is a simple comparison of air conditioner operation control with and without an inverter.

**■ Inverter operation comparison**

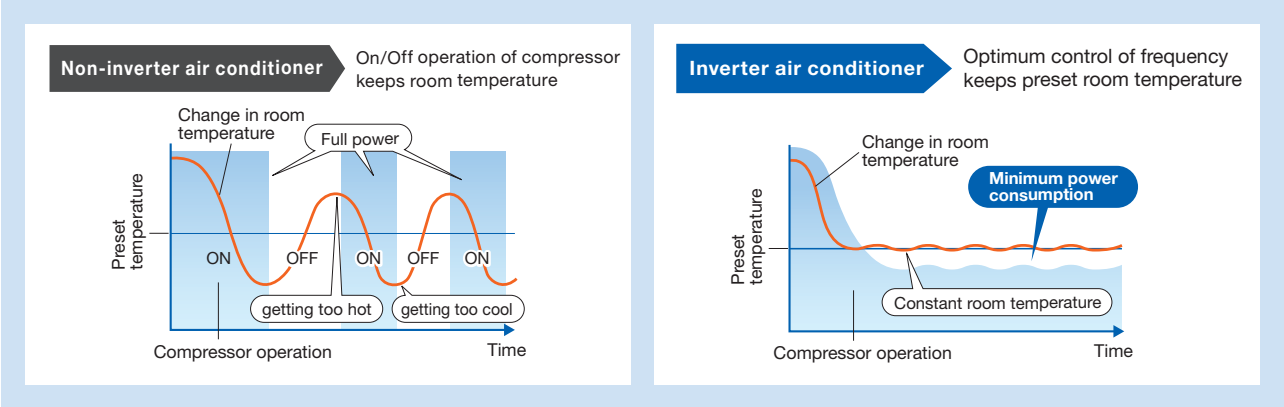


The compressors of air conditioners without an inverter start and stop repeatedly in order to maintain the preset room temperature. This repetitive on/off operation uses excessive electricity and compromises room comfort. The compressors of air conditioners equipped with an inverter run continuously; the inverter quickly optimizing the operating frequency according to changes in room temperature. This ensures energy-efficient operation and a more comfortable room.

### Point 1 Quick & Powerful

Increasing the compressor motor speed by controlling the operation frequency ensures powerful output at start-up, brings the room temperature to the comfort zone faster than units not equipped with an inverter. Hot rooms are cooled, and cold rooms are heated faster and more efficiently.

### Point 2 Room Temperature Maintained

The compressor motor operating frequency and the change of room temperature are monitored to calculate the most efficient waveform to maintain the room temperature in the comfort zone. This eliminates the large temperature swings common with non-inverter systems, and guarantees a pleasant, comfortable environment.

## KEY TECHNOLOGIES

### Our Rotary Compressor

Our rotary compressors use our original "Poki-Poki Motor" and "Heat Caulking Fixing Method" to realise downsizing and higher efficiency, and are designed to match various usage scenes in residential to commercial applications. Additionally, development of an innovative production method known as "Divisible Middle Plate" realises further size/weight reductions and increased capacity while also answering energy-efficiency needs.

### Our Scroll Compressor

Our scroll compressors are equipped with an advanced frame compliance mechanism that allows self-adjustment of the position of the orbiting scroll according to pressure load and the accuracy of the fixed scroll position. This minimises gas leakage in the scroll compression chamber, maintains cooling capacity and reduces power loss.

# MORE ADVANTAGES WITH MITSUBISHI ELECTRIC

## Joint Lap DC Motor

Mitsubishi Electric has developed a unique motor, called the "Poki-Poki Motor" in Japan, which is manufactured using a joint lapping technique. This innovative motor operates based on a high-density, high-magnetic force, leading to extremely high efficiency and reliability.

## Magnetic Flux Vector Sine Wave Drive

This drive device is actually a microprocessor that converts the compressor motor's electrical current waveform from a conventional waveform to a sine wave (180°conductance) to achieve higher efficiency by raising the motor winding utilisation ratio and reducing energy loss.

## Reluctance DC Rotary Compressor

Powerful neodymium magnets are used in the rotor of the reluctance DC motor. More efficient operation is realised by strong magnetic and reluctance torques produced by the magnets.

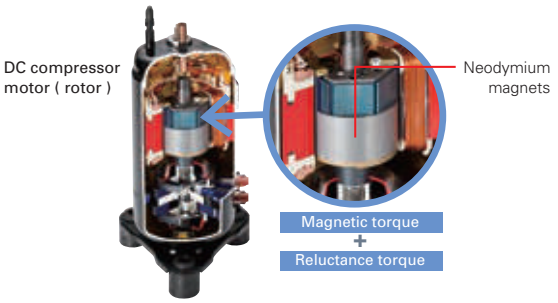


## Highly Efficient DC Scroll Compressor

Higher efficiency has been achieved by adding a frame compliance mechanism to the DC scroll compressor. The mechanism allows movement in the axial direction of the frame supporting the cradle scroll, thereby greatly reducing leakage and friction loss, and ensuring extremely high efficiency at all speeds.

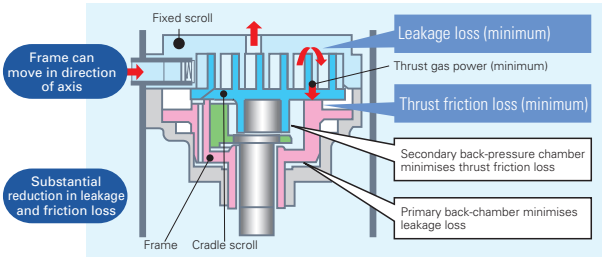


## Heat Caulking Fixing Method

To fix internal parts in place, a "Heat Caulking Fixing Method" is used, replacing the former arc spot welding method. Distortion of internal parts is reduced, realising higher efficiency.

## DC Fan Motor

A highly efficient DC motor drives the fan of the outdoor unit. Efficiency is much higher than an equivalent AC motor.

## Vector-Wave Eco Inverter

This inverter monitors the varying compressor motor frequency and creates the most efficient waveform for the motor speed. As the result, operating efficiency in all speeds ranges is improved, less power is used and annual electricity cost is reduced.

**Smooth wave pattern**

Inverter size has been reduced using insert-molding, where the circuit pattern is molded into the synthetic resin. To ensure quiet operation, soft PWM control is used to prevent the metallic whine associated with conventional inverters.

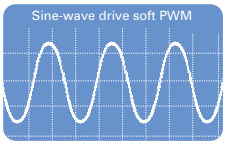


## PAM (Pulse Amplitude Modulation)

PAM is a technology that controls the current waveform so that it resembles the supply voltage wave, thereby reducing loss and realising more efficient use of electricity. Using PAM control, 98% of the input power supply is used effectively.

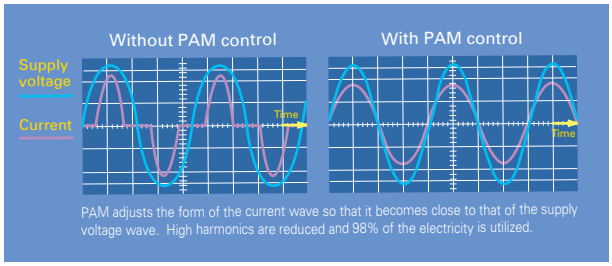


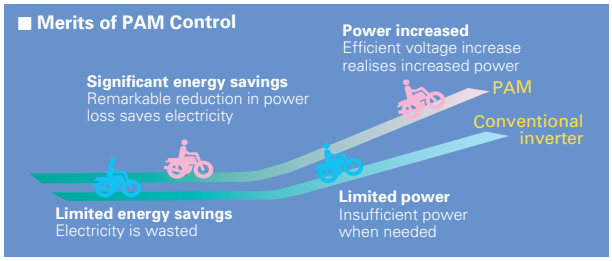


## Power Receiver and Twin LEV Control

Mitsubishi Electric has developed a power receiver and twin linear expansion valves (LEVs) circuit that optimise compressor performance. This technology ensures optimum control in response to operating waveform and outdoor temperature. Operating efficiency has been enhanced by tailoring the system to the characteristics of R410A refrigerant.

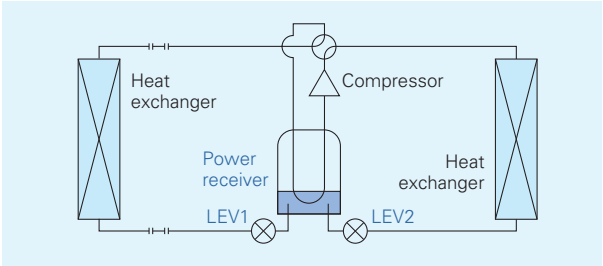


## Grooved Piping

High-performance grooved piping is used in heat exchangers to increase the heat exchange area.

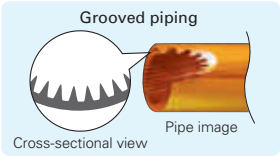

# COMFORT

## 3D i-see Sensor

### 3D i-see Sensor for M SERIES

The LN Series and FH Series are equipped with the 3D i-see Sensor, an infrared-ray sensor that measures the temperature at distant positions. While moving to the left and right, eight vertically arranged sensor elements analyze the room temperature in three dimensions. This detailed analysis makes it possible to judge where people are in the room, thus allowing creation of features such as "Indirect airflow," to avoid airflow hitting people directly, and "direct airflow" to deliver airflow to where people are.

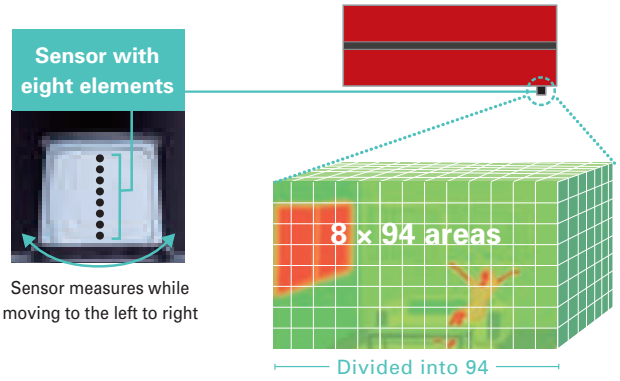


(Image)

#### No occupancy energy-saving mode

The sensors detect whether there are people in the room. When no-one is in the room, the unit automatically switches to energy-saving mode.

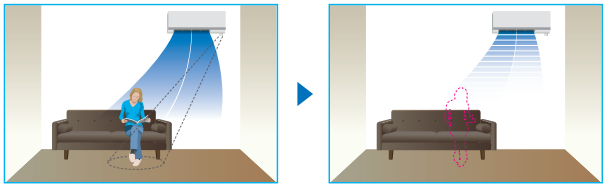

The "3D i-see Sensor" detects people's absence and the power consumption is automatically reduced approximately 10% after 10 minutes and 20% after 60 minutes.

#### Indirect Airflow

The indirect airflow setting can be used when the flow of air feels too strong or direct. For example, it can be used during cooling to avert airflow and prevent body temperature from becoming excessively cooled.

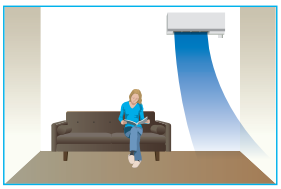

#### Direct Airflow

This setting can be used to directly target airflow at people such as for immediate comfort when coming indoors on a hot (cold) day.

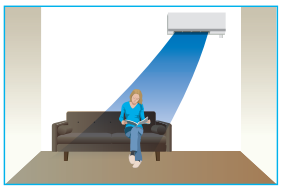

#### Even Airflow *LN Series only

Normal swing mode

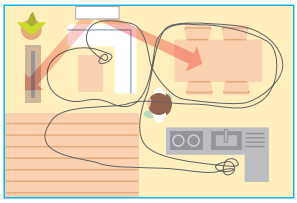

The airflow is distributed equally throughout the room, even to spaces where there is no human movement.

Even airflow mode

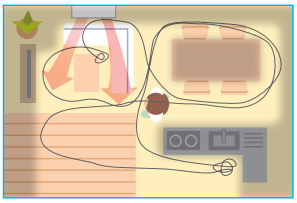

The 3D i-see sensor memorizes human movement and furniture positions, and efficiently distributes airflow.

#### No occupany Auto-OFF mode *LN Series only

The sensors detect whether or not there are people in the room. When there is no one in the room, the unit turns off automatically.

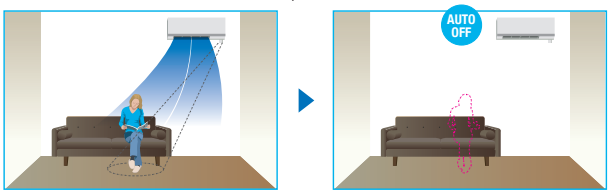


### 3D i-see Sensor for S & P SERIES

#### Detects number of people

The 3D i-see Sensor detects the number of people in the room and adjusts the power accordingly. This makes automatic power-saving operation possible in places where the number of people changes frequently. Additionally, when the area is continuously unoccupied, the system switches to a more enhanced power-saving mode. Depending on the setting, it can also stop the operation.

#### Detects people's position

Once a person is detected, the angle of the vane is automatically adjusted. Each vane can be indenpendently set to "Direct Airflow" or "Indirect Airflow" according to taste.

#### Highly accurate people detection

A total of eight sensors rotate a full 360° in 3-minute intervals. In addition to detecting human body temperature, our original algorithm also detects people's positions and the number of people.



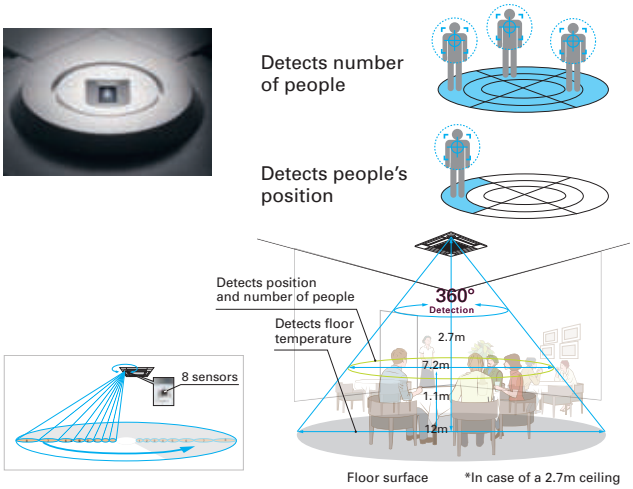

## Detects number of people

### Room occupancy energy-saving mode

The 3D i-see Sensor detects the number of people in the room. It then calculates the occupancy rate based on the maximum number of people in the room up to that point in time in order to save air-conditioning power. When the occupancy rate is approximately 30%, air-conditioning power equivalent to 1°C during both cooling and heating operation is saved. The temperature is controlled according to the number of people.

### No occupancy energy-saving mode

When 3D i-see Sensor detects that no one is the room, the system is switched to a pre-set power-saving mode. If the room remains unoccupied for more than 60min, air-conditioning power equivalent to 2°C during both cooling and heating operation is saved. This contributes to preventing waste in terms of heating and cooling.

### No occupancy Auto-OFF mode*

When the room remains unoccupied for a pre-set period of time, the air conditioner turns off automatically, thereby providing even greater power savings. The time until operation is stopped can be set in intervals of 10min, ranging from 60 to 180 min.

* When MA Remote Controller is used to control multiple refrigerant systems, "No occupancy Auto-OFF mode" cannot be used.

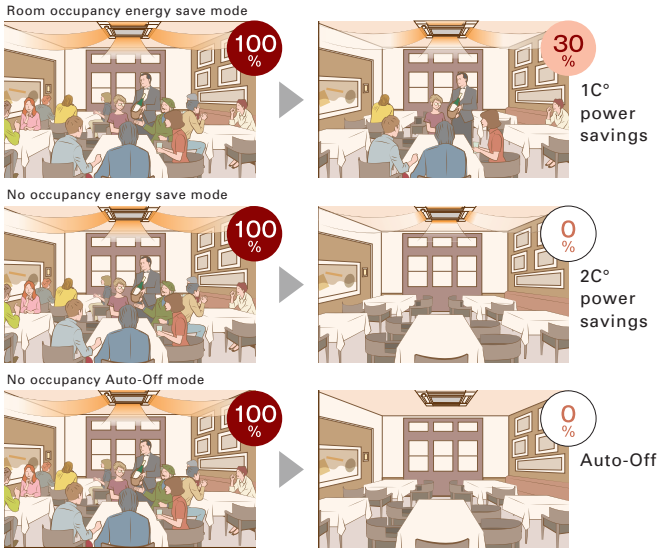


*PAR-40MAA is required for each setting

## Detects people's position

### Direct/Indirect settings*

The horizontal airflow spreads across the ceiling. When set to "Indirect Airflow" uncomfortable drafty-feeling is eliminated completely!

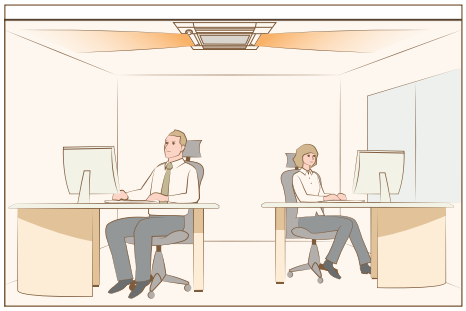

*PAR-40MAA or PAR-SL100A-E is required for each setting.

### Seasonal airflow*

**When cooling**
Saves energy while keeping a comfortable effective temperature by automatically switching between ventilation and cooling. When a pre-set temperature is reached, the air conditioning unit switches to swing fan operation to maintain the effective temperature. This clever function contributes to keeping a comfortable coolness.

**When heating**
The air conditioning unit automatically switches between circulator and heating. Wasted heat that accumulates near the ceiling is reused via circulation. When a pre-set temperature is reached the air conditioner switches from heating to circulator and blows air in the horizontal direction. It pushes down the warm air that has gathered near the ceiling to people's height, thereby providing smart heating.

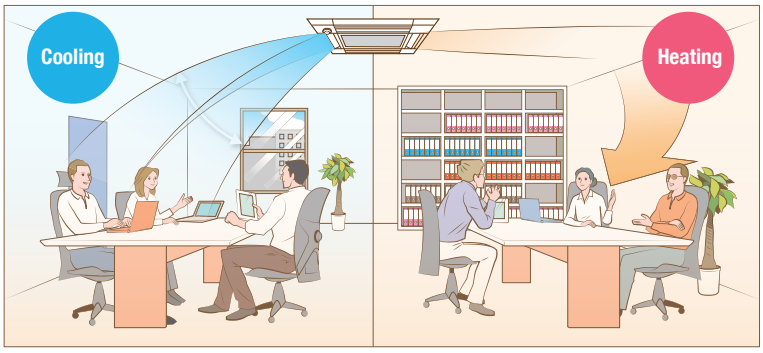


*PAR-40MAA is required for each setting.

## Area Temperature Monitor

The "3D i-see Sensor" monitors the whole room in sections and directs the airflow to areas of the room where the temperature does not match the temperature setting. (When cooling the room, if the middle of the room is detected to be hotter, more airflow is directed towards it.) This eliminates unnecessary heating /cooling and contributes to lower electricity costs.

Cooling mode

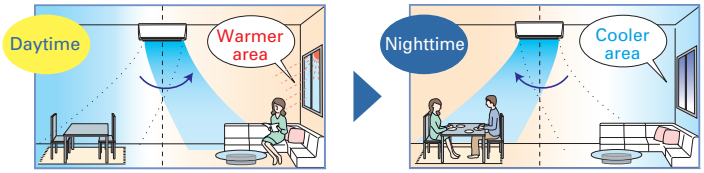

# COMFORT

## ENERGY-SAVING

### Econo Cool Energy-Saving Feature

"Econo Cool" is an intelligent temperature control feature that adjusts the amount of air directed towards the body based on the air-outlet temperature. The setting temperature can be raised by as much as 2°C without any loss in comfort, thereby realising a 20% gain in energy efficiency. *(Function only available during manual cooling operation.)*

| | Conventional | Econo Cool |
|---|---|---|
| **Ambient** temperature | 35°C | 35°C |
| **Set** temperature | 25°C | 27°C |
| **Perceived** temperature | 30°C | 29.3°C |

Econo Cool Mode
A comfortable room environment is maintained even when setting the temperature 2°C higher than the conventional cooling mode.

Econo Cool on

Conventional cooling mode

Temperature distribution (°C)

### Demand Function (Onsite Adjustment)

The demand function can be activated when the unit is equipped with a commercially available timer or an On/Off switch is added to the CNDM connector (option) on the control board of the outdoor unit. Energy consumption can be reduced up to 100% of the normal consumption according to the signal input from outside.

[Example: Power Inverter Series]
Limit energy consumption by changing the settings of SW7-1, SW2 and SW3 on the control board of the outdoor unit. The following settings are possible.

| SW7-1 | SW2 | SW3 | Energy consumption |
|---|---|---|---|
| ON | OFF | OFF | 100% |
| | ON | OFF | 75% |
| | ON | ON | 50% |
| | OFF | ON | 0% (Stop) |

*PUHZ outdoor only

## AIR QUALITY

### Plasma Quad Plus

Plasma Quad Plus is a plasma-based filter system similar to Plasma Quad, but in addition to bacteria, viruses, allergens, and dust, it can also filter out microparticles such as PM2.5.

### Plasma Quad

Plasma Quad attacks bacteria and viruses from inside the unit using a strong curtain-like electrical field and discharge of electric current across the whole inlet-air opening of the unit.

### Dual Barrier Coating

A two-barrier coating which prevents hydrophobic and hydrophillic dirt from sticking to the inner surface and inner parts of the indoor unit.

### Fresh-air Intake

Indoor air quality is enhanced by the direct intake of fresh exterior air.

### High-efficiency Filter

This high-performance filter has a much finer mesh compared to standard filters, and is capable of capturing minute particulates floating in the air that were not previously caught.

### Air Purifying Filter

The filter has a large capture area and deodourise the circulating air.

### Oil Mist Filter

The oil mist filter prevents oil mist from penetrating into the inner part of the air conditioner.

### Long-life Filter

A special process for the entrapment surface improves the filtering effect, making the maintenance cycle longer than that of units equipped with conventional filters.

### Filter Check Signal

Air conditioner operating time is monitored, and the user is notified when filter maintenance is necessary.

### Silver-ionized Air Purifier Filter

Captures the bacteria, pollen and other allergens in the air and neutralises them.

# AIR DISTRIBUTION

## Double Vane

Double vane separates the airflow in the different directions to deliver airflow not only across a wide area of the room, but also simultaneously to two people in different locations.

## Horizontal Vane

The air outlet vane swings up and down so that the airflow is spread evenly throughout the room.

## Vertical Vane

The air outlet fin swings from side to side so that the airflow reaches every part of the room.

## High Ceiling Mode

In the case of rooms with high ceilings, the outlet-air volume can be increased to ensure that air is circulated all the way to the floor.

## Low Ceiling Mode

If the room has a low ceiling, the airflow volume can be reduced for less draft.

## Auto Fan Speed Mode

The airflow speed mode adjusts the fan speed of the indoor unit automatically according to the present room conditions.

# CONVENIENCE

## CONVENIENCE

### "i save" Mode

"i save" is a simplified setting function that recalls the preferred (preset) temperature by pressing a single button on the remote controller. Press the same button twice in repetition to immediately return to the previous temperature setting.
Using this function contributes to comfortable waste-free operation, realising the most suitable air conditioning settings and saving on power consumption when, for example, leaving the room or going to bed.

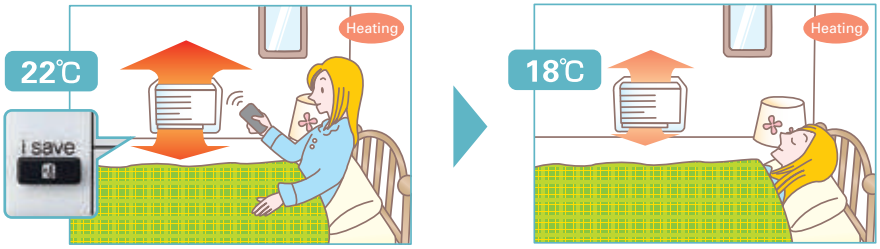

✻ Temperature can be preset to 10°C when heating in the "i-save" mode.

### Auto Changeover

The air conditioner automatically switches between heating and cooling modes to maintain the desired temperature.

### Low-temperature Cooling

Intelligent fan speed control in the outdoor unit ensures optimum performance even when the outside temperature is low.

### Ampere Limit Adjustment

Dip switch settings can be used to adjust the maximum electrical current for operation. This function is highly recommended for managing energy costs.

*Maximum capacity is lowered with the use of this function.

### Operation Lock (Indoor unit)

To accommodate specific-use applications, cooling or heating operation can be specified using the wireless remote controller. A convenient option when a system needs to be configured for exclusive cooling or heating service.

### Operation Lock (Outdoor unit)

To accommodate specific-use applications, cooling or heating operation can be specified when setting the control board of the outdoor unit. A convenient option when a system needs to be configured for exclusive cooling or heating service.

### Auto Restart

Especially useful at the time of power outages, the unit turns back on automatically when power is restored.

### 10°C Heating

During heating operation, the temperature can be set in 1°C increments down to 10°C.

■ Dip Switch Setting (Board for MXZ-5E102)

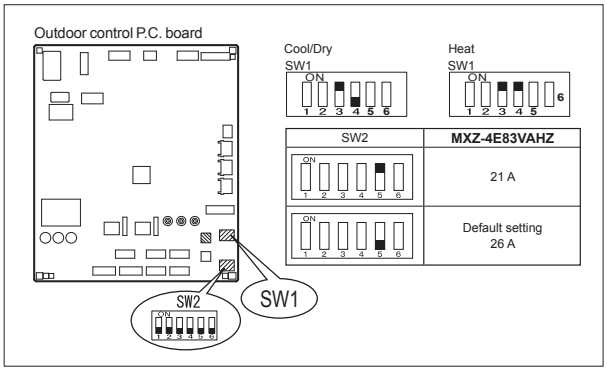

## Night Mode

When Night Mode is activated using the wireless remote controller, it will switch to the settings described below.

- The brightness of the operation indicator lamp will become dimmer.
- The beeping sound will be disabled.
- The outdoor operating noise will drop to 3dB lower than the rated specification operating noise.

*The cooling/heating capacity may drop.

## Low-noise Operation (Outdoor Unit)

System operation can be adjusted to prioritise less noise from the outdoor unit over air conditioning performance.

## On/Off Operation Timer

Use the remote controller to set the times of turning the air conditioner On/Off.

## Built-in Weekly Timer Function

Easily set desired temperatures and operation ON/OFF times to match lifestyle patterns. Reduce wasted energy consumption by using the timer to prevent forgetting to turn off the unit and eliminate temperature setting adjustments.

**■ Example Operation Pattern (Winter/Heating mode)**

| | Mon. | Tues. | Wed. | Thurs. | Fri. | Sat. | Sun. |
|---|---|---|---|---|---|---|---|
| 6:00 | ON 20°C | ON 20°C | ON 20°C | ON 20°C | ON 20°C | ON 20°C | ON 20°C |
| 8:00 | Automatically changes to high-power operation at wake-up time | | | | | | |
| 10:00 | OFF | OFF | OFF | OFF | OFF | ON 18°C | ON 18°C |
| 12:00 | Automatically turned off during work hours | | | | | Midday is warmer, so the temperature is set lower | |
| 14:00 | | | | | | | |
| 16:00 | | | | | | | |
| 18:00 | ON 22°C | ON 22°C | ON 22°C | ON 22°C | ON 22°C | ON 22°C | ON 22°C |
| 20:00 | Automatically turns on, synchronized with arrival at home | | | | | Automatically raises temperature setting to match time when outside-air temperature is low | |
| 22:00 | | | | | | | |
| (during sleeping hours) | ON 18°C | ON 18°C | ON 18°C | ON 18°C | ON 18°C | ON 18°C | ON 18°C |
| | Automatically lowers temperature at bedtime for energy-saving operation at night | | | | | | |

**Settings**

**Pattern Settings:** Input up to four settings for each day

**Settings:** •Start/Stop operation •Temperature setting ✻The operation mode cannot be set.

### ■ Easy set-up using dedicated buttons

The remote controller is equipped with buttons that are used exclusively for setting the Weekly Timer. Setting operation patterns is easy and quick.

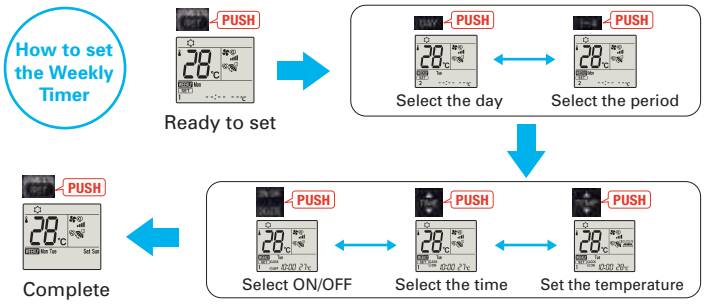


- Start by pushing the "SET" button and follow the instructions to set the desired patterns. Once all of the desired patterns are input, point the top end of the remote controller at the indoor unit and push the "SET" button one more time. (Push the "SET" button only after inputting all of the desired patterns into the remote controller memory. Pushing the "CANCEL" button will end the set-up process without sending the operation patterns to the indoor unit).
- It takes a few seconds to transmit the Weekly Timer operation patterns to the indoor unit. Please continue to point the remote controller at the indoor unit until all data has been sent.

## Back Light Remote Controller

Not only the indoor units, but the wireless remote controllers come in four colours as well. Each remote controller matches the indoor unit. Even the textures are the same.

The setting can be easily checked in the dark.

# INSTALLATION & MAINTENANCE

## INSTALLATION

### Cleaning-free Pipe Reuse

It is possible to reuse the same piping. It allows cleaning-free renewal of air conditioning systems that use R22 or R410 refrigerant.

### Wiring Reuse — Reuse of Existing Wiring

**Wiring recycling problem solved! Compatible with other wiring connection methods***

The wiring method has been improved, making it possible to use methods different from that utilized for control and power supply. Units are compatible with the dual harness control line/power line method and the separate power supply method. Using a power supply terminal kit, wire can be efficiently reused at the time of system renewal regardless of the method the existing system uses.

* Optional. Usage may be limited due to wiring type diameter.

**Single Harness Control/Power Line Method (Current method)**

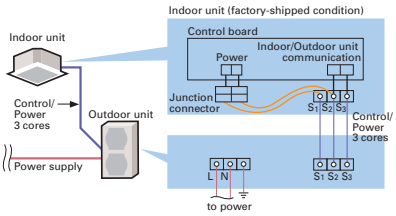


**Dual Harness Control Line/Power Line Method**

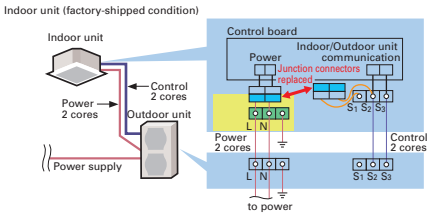


**Separate Power Supply Method**

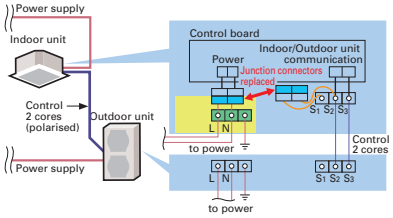


### Wiring Correction — Wiring/Piping Correction Function*

The push of a single button is all that is required to confirm that piping and wiring are properly connected. Corrections are made automatically if a wiring error is detected, eliminating the need for complicated wiring confirmation work when expanding the number of rooms served.

* This function cannot be used when the outdoor temperature is below 0°C.
The correction process requires 10–20 minutes, and only works when the unit is set to the Cooling mode.

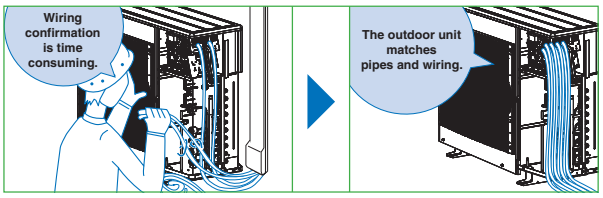


### Drain Lift Up — Drain Pump

A built-in drain pump enables drain piping to be raised.

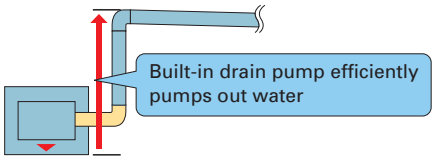


### Flare connection — Flare Connection

Flare connection to cooling pipe work is possible.

### Pump Down — Pump Down Switch

Enables smooth and easy recovery of refrigerant. Simply press the "Pump Down" switch before moving or changing the unit.

Outdoor unit control circuit board

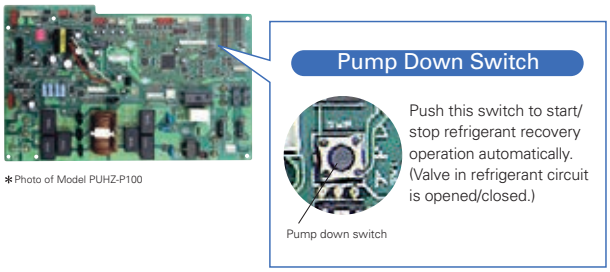


* Photo of Model PUHZ-P100

# MAINTENANCE

## Self-Diagnostic Function (Check Code Display)

Check codes are displayed on the remote controller or the operation indicator to inform the user of malfunctions detected.

## Failure Recall Function

Operation failures are recorded, allowing confirmation when needed.

# SYSTEM CONTROL

## SYSTEM CONTROL

### PAR-40MAA/PAC-YT52CRA/PAC-CT01MAA

Units are compatible for use with the PAR-40MAA, PAC-YT52CRA or PAC-CT01MAA remote controller, which has a variety of management functions.

### COMPO (Simultaneous Multi-unit Operation)

Multiple indoor units can be connected to a single outdoor unit. (Depending on the unit combination, connection of up to four units is possible; however, all indoor units must operate at the same settings.)

### System Group Control

The same remote controller is capable of controlling the operational status of up to 16 refrigerant systems.

### MXZ Connection

Connection to the MXZ multi-split outdoor unit is possible.

### M-NET Connection

Units can be connected to MELANS system controllers (M-NET controllers) such as the AG-150A.

### MELCloud (Wi-Fi interface)

**MELCloud for fast, easy remote control and monitoring**

MELCloud is a Cloud-based solution for controlling air-conditioner either locally or remotely by computer, tablet or smartphone via the Internet. Setting up and remotely operating via MELCloud is simple and straight forward. All you need is wireless computer connectivity in your home or the building where the air-conditioner is installed and an Internet connection on your mobile or fixed terminal. To set up the system, the router and the Wi-Fi interface must be paired, and this is done simply and quickly using the WPS button found on all mainstream routers.
You can control and check air-conditioner via MELCloud from virtually anywhere an Internet connection is available.
That means, thanks to MELCloud, you can use much more easily and conveniently.

**Key control and monitoring features**

1. **Turn system on/off**
2. **See status of operating & adjust set point**
3. **Live weather feed from your location**
   Schedule timer - Set 7 day weekly schedule
   Error status
4. **Energy Consumption Monitoring**

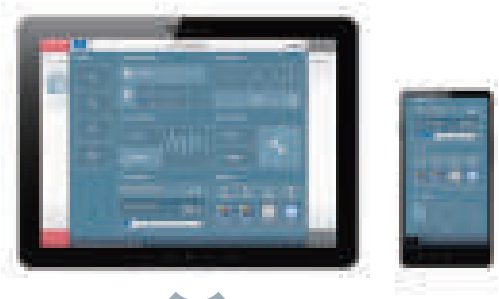

MELCloud™

MELCloud uses the MAC-567IF-E interface

**Connecting the Wi-Fi interface**

The new Wi-Fi interface MAC-567IF-E can be mounted on the wall or on the outer side of the indoor unit.
For LN Series, there is a built-in Wi-Fi interface inside the indoor unit.

## When mounting on the wall

The interface can be mounted simply by affixing the holder to the wall on either side of the unit and inserting the interface unit into the holder.

*When mounting on the right side of the unit

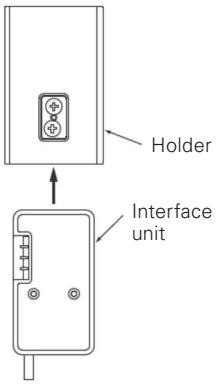


## When mounting on the outer side of the unit

The interface can be mounted on the right side, left side, bottom right, or bottom left of the indoor unit. After inserting the clip into the holder, slip the clip over the edge of the corner box.

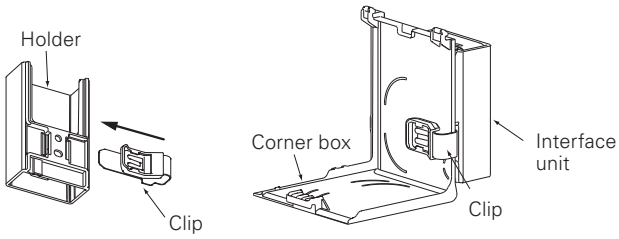

Right side

Bottom right

Left side

Bottom left

# CONTROL TECHNOLOGIES

PAR-40MAA

## User-friendly Deluxe Remote Controller with Excellent Operability and Visibility

Easy To Read & Easy To Use

### Inverted display screen

The screen background color can be set to black to suit the atmosphere of the installation location.

### Full Dot Liquid-crystal Display Adopted

Easier to read thanks to use of a full dot liquid-crystal display with backlight, and easier to use owing to adopting a menu format that has reduced the number of operating buttons.

Display Example [Operation Mode]

Full Dot LCD

### Multi-language Display

Multi-language

**Control panel operation in fourteen different languages**

Choose the desired language, among the following languages.

| | | | |
|---|---|---|---|
| English | Spanish | Italian | Turkish |
| French | Greek | Portuguese | Swedish |
| German | Russian | Polish | Czech |
| Hangarian | Dutch | | |

### Temperature Control

Dual Set Point

**Two preset temperatures**

When the operation mode is set to the Auto (Dual Set Point) mode, two preset temperatures (one each for cooling and heating) can be set. Depending on the room temperature, indoor unit will automatically operate in either the COOL or HEAT mode and keep the room temperature within the preset range.

**Operation pattern during Auto (Dual Set Point) mode**

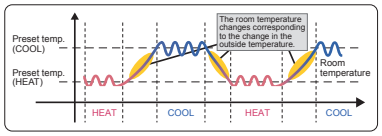


*Please refer to the function list on pages 193-200 for the combination of the available units.

Energy-efficient Control

### Operation Control Functions

Energy-saving Schedule

**Precise control of power consumption**

The amount of power consumed in each time period is managed so that the demand value is not exceeded. The demand control function can be set to start and finish in 5-minute units. Additionally, the level can be adjusted to 0, 50, 60, 70, 80 or 90% of maximum capacity, and up to 4 patterns can be set per day. Air-conditioning operation is automatically controlled to ensure that electricity in excess of the contracted volume is not consumed.

■Setting pattern example

| Start time | | Finish time | Capacity savings |
|---|---|---|---|
| 8:15 | → | 12:00 | 80% |
| 12:00 | → | 13:00 | 50% |
| 13:00 | → | 17:00 | 90% |
| 17:00 | → | 21:00 | 50% |

## Auto-return

### Prevents wasteful operation by automatically returning to the preset temperature after specified operating time

After adjusting the temperature for initial heating in winter or cooling on a hot summer day, it is easy to forget to return the temperature setting to its original value. The Auto-return function automatically resets the temperature back to the original setting after a specified period of time, thereby preventing overheating/overcooling. The Auto-return activation time can be set in 10-minute units, in a range between 30 and 120 minutes.

*Auto-return cannot be used when Temperature Range Restrictions is in use.

## Auto-off Timer

### Turns heating/cooling off automatically after preset time elapses

When using Auto-off Timer, even if one forgets to turn off the unit, operation stops automatically after the preset time elapses, thereby preventing wasteful operation. Auto-off Timer can be set in 10-minute units, in a range between 30 minutes and 4 hours. Eliminates all anxiety about forgetting to turn off the unit.

Recommended for: Meeting room, Changing room

## Night Setback

### Keep desired room temperatures automatically

This function monitors the room temperature and automatically activates the heating mode when the temperature drops below the preset minimal temperature setting. It has the same function for cooling, automatically activating the cooling mode when the temperature rises above the preset maximum temperature setting.

## Operation Lock

### Fixed temperature setting promotes energy savings

In addition to operation start/stop, the operation mode, temperature setting and airflow direction can be locked. Unwanted adjustment of temperature settings is prevented and an appropriate temperature is constantly maintained, leading to energy savings. This feature is also useful in preventing erroneous operation or tampering.

Recommended for: Office, School, Public hall, Hospital, Computer server facility

## Temperature Range Restriction

### Temperature Range Restriction prevents overheating/overcooling

Using a temperature that is 1°C lower/higher for heating/cooling results in a 10% reduction in power consumption.* Temperature Range Restriction limits the maximum and minimum temperature settings, contributing to the prevention of overheating/overcooling.

*In-house calculations

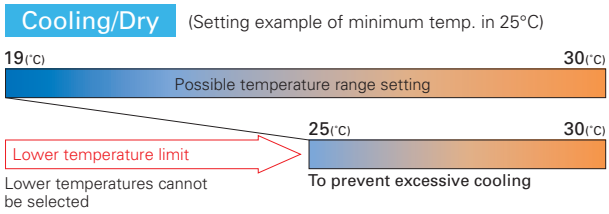


Recommended for: Office, Restaurant

## Weekly Timer

### Weekly Timer with Two Types of Settings

Weekly schedule timer can save two different settings which can be easily switched according to different seasons.
In addition, it offers eight different pattern setting per day. (on, off and temperature setting)

*Weekly Timer cannot be used when On/Off Timer is in use.

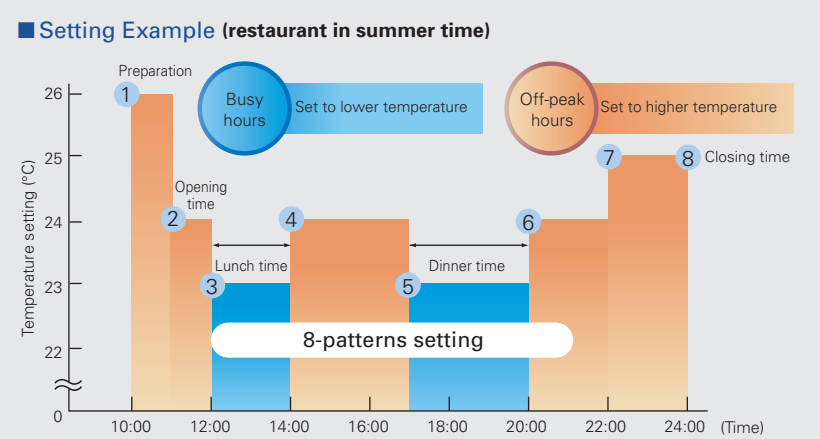


Necessary to change temperature settings for cooling/heating times.
*Joint research conducted with Japan Facility Solutions, Inc.

# CONTROL TECHNOLOGIES

## Installation/Maintenance Support Functions

### Smooth Maintenance

**Outdoor unit data accessed immediately, enabling fast maintenance (only PUZ/PUHZ type)**

Using the Stable Operation Control (fixed frequency) of the Smooth Maintenance function, the operating status of the inverter can be checked easily via the screen on the remote controller.

■ Smooth Maintenance Function Operating Procedure

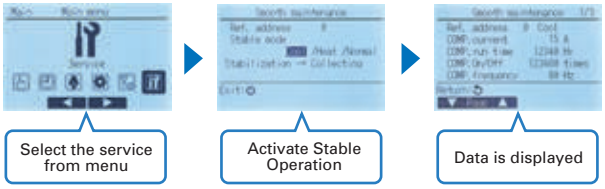


**Display information (11 items)**

| Compressor | | | |
|---|---|---|---|
| ① | COMP. current (A) | ⑥ | OU TH4 temp. (°C) |
| ② | COMP. run time (Hr) | ⑦ | OU TH6 temp. (°C) |
| ③ | COMP. ON/OFF (times) | ⑧ | OU TH7 temp. (°C) |
| ④ | COMP. frequency (Hz) | **Indoor Unit** | |
| **Outdoor Unit** | | ⑨ | IU air temp. (°C) |
| | | ⑩ | IU HEX temp. (°C) |
| ⑤ | Sub cool (°C) | ⑪ | IU filter operating time* (Hr) |

*IU filter operating time is the time elapsed since filter was reset.

**Inspection Guidelines**

The computed temperature difference is plotted as in the graph below and operating status is determined.

| | | Item |
|---|---|---|
| Cooling | Temp. difference | (⑥ OU TH4 temp.) – (⑦ OU TH6 temp.) |
| | | (⑨ IU air temp.) – (⑩ IU HEX temp.) |
| Heating | | (⑥ OU TH4 temp.) – (⑩ IU HEX temp.) |
| | | (⑩ IU HEX temp.) – (⑨ IU air temp.) |

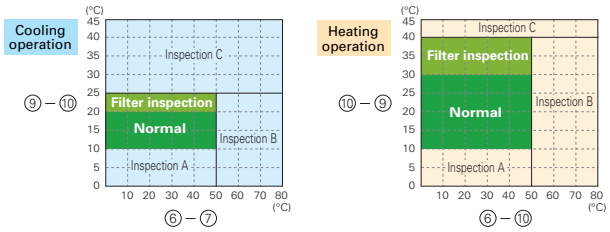


**Result**

| | |
|---|---|
| **Normal** | Normal operating status. |
| **Filter inspection** | Filter may be blocked.*1 |
| Inspection A | Capacity is reduced. Detailed inspection is necessary. |
| Inspection B | Refrigerant level is low. |
| Inspection C | Filter or indoor unit heat exchanger is blocked. |

*1: Due to indoor and outdoor temperatures, "Filter inspection" may be displayed even if the filter is not blocked.

* The above graphs are based on trial data. Results may vary depending on installation/temperature conditions.

- Stable operation may not be possible under the following temperature conditions:
  a) In cooling mode when the outdoor induction temperature is over 40°C or the indoor induction temperature is below 23°C.
  b) In heating mode when the outdoor induction temperature is over 20°C or when the indoor induction temperature is over 25°C.
- If the above temperature conditions do not apply and stable operation is not achieved after 30 minutes has passed, please inspect the units.
- The operating status may change due to frost on the outdoor heat exchanger.

### Manual Vane Angle Setting (4-way ceiling cassette)

**Direction of vertical airflow for each vane can be set**

Setting the vertical airflow direction for each individual vane can be performed simply via illustrated display. Seasonal settings such as switching between cooling and heating are easily changed as well.

### Auto-descending Panel Operation

**Easily raise/lower panels using the remote controller**

Auto-descending panel operation is available as an option. Panels can be raise/lower using a button on the wired remote controller. Filter cleaning can be performed easily.

### Silent Mode

**Three outdoor noise level setting**

The outdoor noise level can be reduced on demand according to the surrounding environment. Select from three setting mode: standard mode (rated), silent mode and ultra-silent mode.

### Initial Password Setting

**Password for initial settings**

A password is required (default setting is "0000") for initial settings such as time and display language.

## Rotation Back-up Rotation*, Back-up* and 2nd Stage Cut-in Functions* (PAR-40MAA)

**(1) Rotation and Back-up Functions**

Function Outline

- Main and sub units take turns operating according to a rotation interval setting.
- If one unit malfunctions, the other unit automatically begins operation (Back-up function)

*PUZ/PUHZ only

System Image

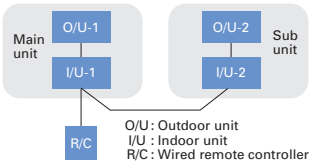


**(2) 2nd Stage Cut-in Function**

Function Outline

- Number of units operating is based on room temperature and predetermined settings.
- When room temperature rises above the desired setting, the standby unit starts (2-unit operation).
- When the room temperature falls 4°C below the predetermined setting, the standby unit stops (1-unit operation).

System Constraint

- This function is only available for rotation operation and when the back-up function is in cooling mode.

*PUZ/PUHZ only

Operation Pattern

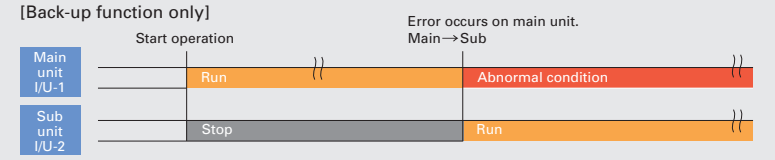


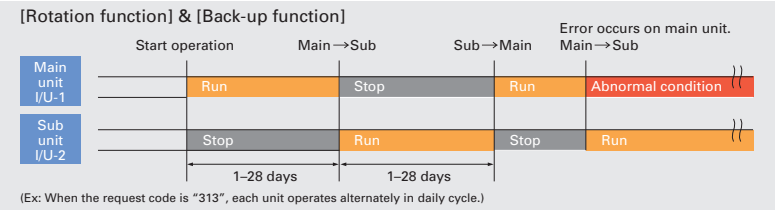


Operation Pattern

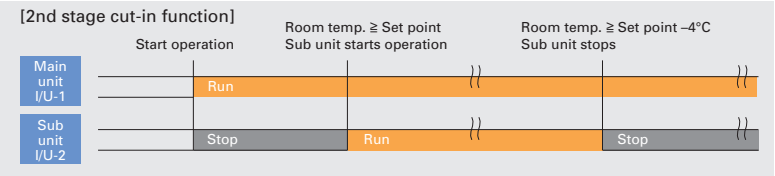


# Simple MA Remote Controller
# PAC-YT52CRA

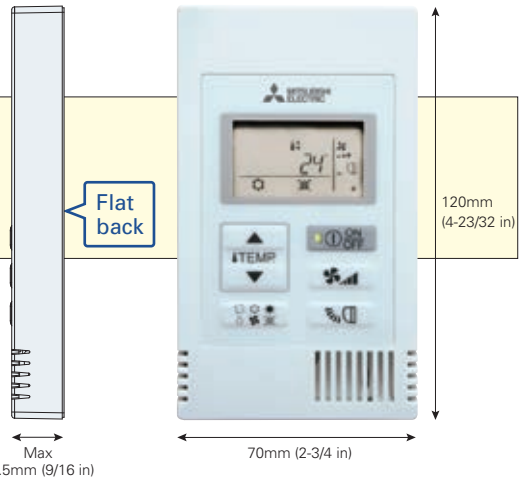


## Backlit LCD

Features a liquid-crystal display (LCD) with backlight for operation in dark conditions.

## Flat Back

The slim and flat-back shape makes installation easier without requiring a hole in the wall. Thickness is 14.5mm or less.

## Vane Angle Setting

The vane button has been added to allow users to change the airflow direction (ceiling-cassette and wall-mounted units).

Pressing the button will switch the vane direction.

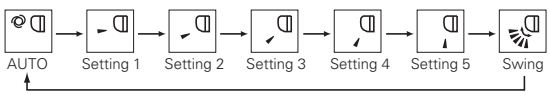


## Dual Set Point

### Two preset temperatures

When the operation mode is set to the Auto (Dual Set Point) mode, two preset temperatures (one each for cooling and heating) can be set. Depending on the room temperature, indoor unit will automatically operate in either the COOL or HEAT mode and keep the room temperature within the preset range.

**Operation pattern during Auto (Dual Set Point) mode**

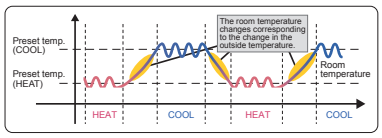


*Please refer to the function list on pages 193-200 for the combination of the available units.

* The settable vane directions vary depending on the indoor unit model to be connected.
* If the unit has no vane function, the vane direction cannot be set. In this case, the vane icon flashes when the button is pressed.

# CONTROL TECHNOLOGIES

## MAT Touch Remote Controller
## PAC-CT01MAA-SB
## PAR-CT01MAA-PB

PAC-CT01MAA-SB

PAR-CT01MAA-PB

## User-friendly
Visible big size icons on the full color touch panel display.

**Full color touch panel display**

Touch Panel

3.5 inch/HVGA Full Color LCD

**Operation panels**

Temperature setting

Operation mode

Fan speed

Vane control

Ventilation

Louver control

## Flexibility
Customized display, color on parameter and background, editable parameter, logo image on the initial display.

**Multiple color pattern**

180 color patterns can be selected for control parameters or background on the display.

Control parameter customize

Users can customize the panel todisplay the selected parameters only.

● Control parameter customize

Simple operation panel is liked by users, especially in hotels. It is available to display only ON/OFF, set temp., fan speed.

Logo image customization

Logo image can be displayed on the initial screen.

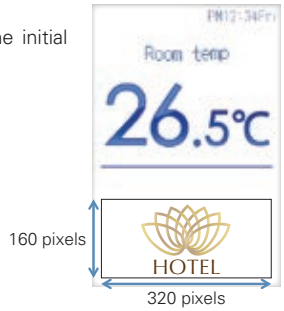


**Available in a wide variety of colors to suit the decor of any room.**

## Expandability Smartphone / tablet App is available for setting, customize, and control.

### Bluetooth® low energy technology

Remote controller can communicate with smartphone or tablet device via Bluetooth Low Energy (BLE). Operation & Setting App are available on the App store.

*The Bluetooth® word mark is trademark of Bluetooth SIG, Inc., USA.
*Contact the sales company for information on "Bluetooth" function.

**<App screen image>**

User App

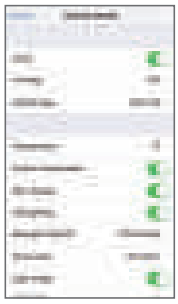

Setting App

### Convenient BLE transmission functions for installation contractors

Initial setup for the remote controller can be easily performed using BLE transmission via a smartphone.

● Previous model

Previously, initial setup (selecting function parameters) was onlyavailable via the remote controller installed each room.

● New model

The initial setup (selecting function parameters) can now be performed in advance on a smartphone, with the settings transmitted to the remote controller by enabling BLE transmission upon entry to the room.

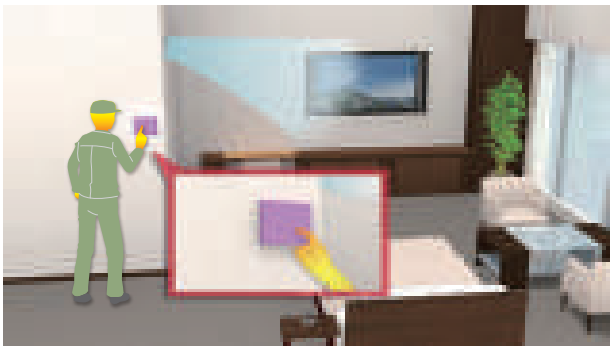

### Convenient BLE transmission functions for guests

The remote controller has been further upgraded with hotels in mind, to allow smartphone connectivity and multilingual support.

Smartphone connectivity

For example, hotel guests can operate the air conditioner via their smartphones, without getting out of bed.

Multilingual support

The smartphone app can be displayed in the language that the guest's smartphone is set to.

# CONTROL TECHNOLOGIES

## Wireless Remote Controller
## PAR-SL100A-E

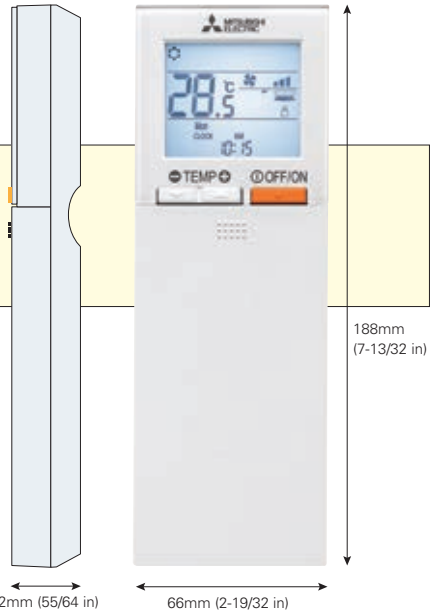


### Weekly Timer

The Weekly Timer enables the setting of operation start and finish times and adjusting the temperature as standard features. Up to 4 patterns per day can be set, providing operation that matches the varying conditions of each period, such as the number of customers in the store.

**■ Example Operation Pattern (Winter/Heating mode)**

| | Mon. | Tues. | Wed. | Thurs. | Fri. | Sat. | Sun. |
|---|---|---|---|---|---|---|---|
| 6:00 | ON 20°C | ON 20°C | ON 20°C | ON 20°C | ON 20°C | ON 20°C | ON 20°C |
| 8:00 | Automatically changes to high-power operation at wake-up time | | | | | | |
| 10:00 | OFF | OFF | OFF | OFF | OFF | ON 18°C | ON 18°C |
| 12:00 | Automatically turned off during work hours | | | | | Midday is warmer, so the temperature is set lower | |
| 14:00 | | | | | | | |
| 16:00 | | | | | | | |
| 18:00 | ON 20°C | ON 20°C | ON 20°C | ON 20°C | ON 20°C | ON 20°C | ON 20°C |
| 20:00 | Automatically turns on, synchronized with arrival at home | | | | | Automatically raises temperature setting to match time when outside-air temperature is low | |
| 22:00 (during sleeping hours) | ON 18°C | ON 18°C | ON 18°C | ON 18°C | ON 18°C | ON 18°C | ON 18°C |
| | Automatically lowers temperature at bedtime for energy-saving operation at night | | | | | | |

*Weekly Timer cannot be used when On/Off Timer is in use.
*Only for SLZ-KF25/35/50/60VA2, PLA-ZP/RP35/50/60/71/100/125/140EA

### Backlight

Backlight function incorporated, making screen easy to read in the dark. Even in dimly lit rooms, the screen can be seen clearly for trouble-free remote controller operation.

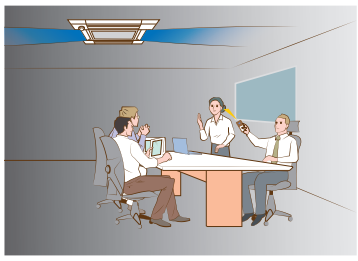

### Individual Vane Settings

The airflow directions of the four vanes can each be adjusted independently. Easily set the optimum airflow according to the room setting.

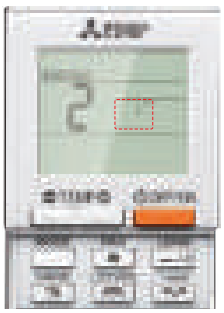

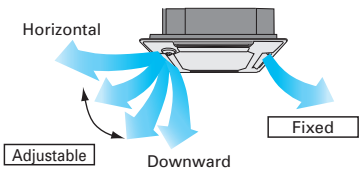


### Dual Set Point

When the operation mode is set to the Auto (Dual Set Point) mode, two preset temperatures (one each for cooling and heating) can be set. Depending on the room temperature, the indoor unit will automatically operate in either the COOL or HEAT mode and keep the room temperature within the preset range.

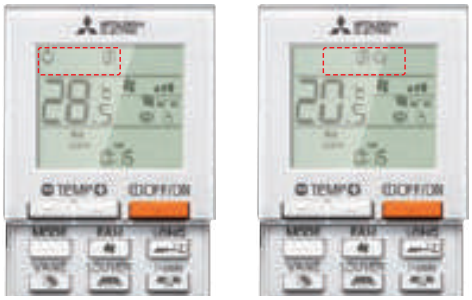

**Operation pattern during Auto (Dual Set Point) mode**

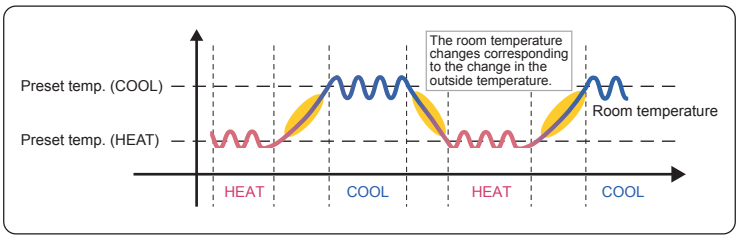


* Only available for compatible models.

## Battery Replacement Sign

Previous wireless remote controllers were not easy to read, understand or use sometimes because the battery was low. Beginning with the PAR-SL100A-E, a battery charge indicator that shows the charge status is included in the LCD so it can be seen when the battery is low and needs to be changed.

## 3D i-see Sensor (Direct/Indirect Airflow)

Pressing the i-see button enables direct or indirect setting of all vanes.

**Direct**

**Indirect**

| | Vane setting | |
|---|---|---|
| | Direct | Indirect |
| Cooling | horizontal → swing | keep horizontal |
| Heating | keep downward | downward → horizontal |

**Direct Airflow**

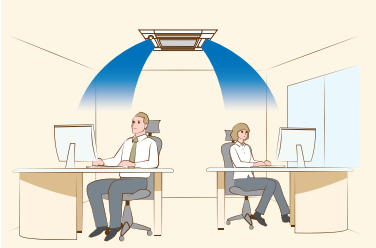

**Indirect Airflow**

*Only available for models equipped with 3D i-see Sensor.

## Basic Functions

| Functions | Button | Liquid crystal |
|---|---|---|
| OFF / ON | OFF/ON | |
| Preset temperature | TEMP | 88.5 °C |
| Mode | MODE | Cool, Dry, Heat, Fan, Auto, Dual set point *Dual Set Point function not operational first use. |
| Fan speed | FAN | 4-Speed, Auto |
| Vane angle | VANE | 5-step, Swing, Auto |
| 3D i-see Sensor | i-see | Direct, Indirect |
| Send sign | | |
| Battery replacement sign | | |
| Function setting | | FUNCTION |
| Test run | | TEST |
| Self check | | CHECK |
| Not available | | N/A |

*This remote controller is only compatible with the following models: SLZ-M15/25/35/50/60FA, PLFY-P15/20/25/32/40/50VFM-E1, PLA-ZM/RP35/50/60/71/100/125/140EA, PLFY-P20/25/32/40/50/63/80/100/125VEM-E

*Functions available vary according to the model.

# SYSTEM CONTROL

Versatile system controls can be realised using optional parts, relay circuits, control panels, etc.

## MAJOR SYSTEM CONTROL

| | System Examples | | |
|---|---|---|---|
| **Indoor Unit** | M Series Indoor Unit | S Series & P Series Indoor Unit | P Series Indoor Unit |
| **Outdoor Unit** | M Series and MXZ Series Outdoor | S Series and MXZ Series Outdoor | P Series Outdoor |
| PAR-40MAA Control<br>PAC-YT52CRA Control | 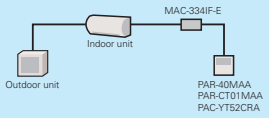 | 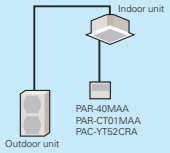 | |
| Details | • Wired remote controller can be connected to indoor unit | Standard equipment (for indoor units compatible with wired remote controllers) | |
| Major Optional Parts Required | • MAC-334IF-E (Interface)<br>• PAR-40MAA (Wired remote controller)<br>• PAR-CT01MAA (Wired remote controller)<br>• PAC-YT52CRA (Wired remote controller) | • PAR-40MAA (Wired remote controller)<br>• PAR-CT01MAA (Wired remote controller)<br>• PAC-YT52CRA (Wired remote controller) | |
| System Group Control | 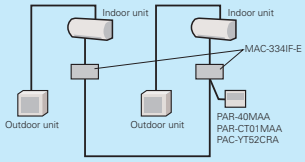 | 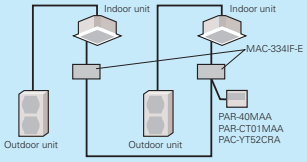 | 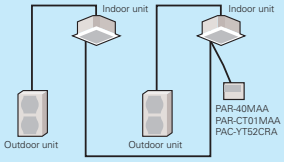 |
| Details | • One remote controller can control plural air conditioners with the same settings simultaneously.<br>• One remote controller can control up to 16 refrigerant systems. (When connected to a MXZ unit, MAC-334IF-E is counted as one system.)<br>• Up to two remote controller can be connected.<br>• PAR-SL100A cannot be used when connected through the MAC-334IF-E or when group control is used. | | |
| Major Optional Parts Required | • MAC-334IF-E (Interface)<br>• PAR-40MAA (Wired remote controller)<br>• PAR-CT01MAA (Wired remote controller)<br>• PAC-YT52CRA (Wired remote controller) | | • PAR-40MAA (Wired remote controller)<br>• PAR-CT01MAA (Wired remote controller)<br>• PAC-YT52CRA (Wired remote controller) |
| M-NET Connections | 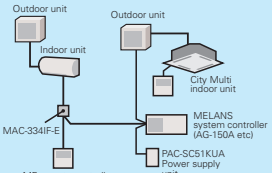 | 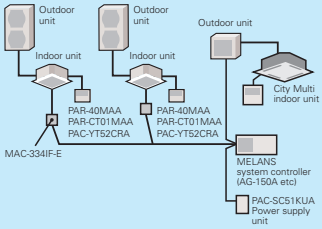 | 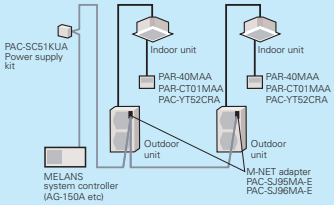 |
| Details | • Group of air conditioners can be controlled by MELANS system controller (M-NET). | | |
| Major Optional Parts Required | • MAC-334IF-E (M-NET Interface)<br>• MELANS System controller<br>• PAC-SC51KUA (power supply unit) | | • PAC-SJ95MA-E or PAC-SJ96MA-E (M-NET converter)<br>• MELANS System controller<br>• PAC-SC51KUA (power supply unit) |

# OTHERS

## For M Series Indoor Units (New A-control Models Only)

| | System Examples | Connection Details | Control Details | Major Optional Parts Required |
|---|---|---|---|---|
| **1 Remote On/Off Operation**<br>• Air conditioner can be started/stopped remotely.<br>(1 and 2 can be used in combination) | 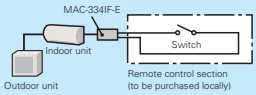 | Connect the interface to the air conditioner. Then connect the locally purchased remote controller to the terminal in the interface. | On/Off operation is possible from a remote location. | • **MAC-334IF-E** (Interface)<br>• Parts for circuit such as relay box, lead wire, etc. (to be purchased locally) |
| **2 Remote Display of Operation Status**<br>• The On/Off status of air conditioners can be confirmed remotely.<br>(1 and 2 can be used in combination) | 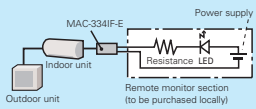 | Connect the interface to the air conditioner. Then connect the locally purchased remote controller to the terminal in the interface. | The operation status (On/Off) or error signals can be monitored from a remote location. | • **MAC-334IF-E** (Interface)<br>• Parts for circuit to be purchased locally (DC power source needed)<br>• External power source (12V DC) is required when using MAC-334IF-E. |

## For P Series and S Series Indoor Units

| | System Examples | | Details | Major Optional Parts Required |
|---|---|---|---|---|
| | Wired remote controller | Wireless remote controller | | |
| **A 2-remote Controller Control**<br>With two remote controllers, control can be performed locally and remotely from two locations. | 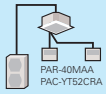 <br>* Set "Main" and "Sub" remote controllers.<br>(Example of 1 : 1 system) | 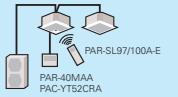 <br>* When using wired and wireless remote controllers<br>(Example of Simultaneous Twin) | • Up to two remote controllers can be connected to one group.<br>• Both wired and wireless remote controllers can be used in combination. | • Wired Remote Controller<br>**PAR-40MAA**<br>**PAC-YT52CRA**<br>(for PKA, **PAC-SH29TC-E** is required)<br>• Wireless Remote Controller<br>**PAR-SL97A-E / PAR-SL100A-E**<br>(only for SLZ)<br>• Wireless Remote Controller Kit for PCA<br>**PAR-SL94B-E** |
| **B Operation Control by Level Signal**<br>Air conditioner can be started/stopped remotely. In addition, On/Off operation by local remote controller can be prohibited/permitted. | 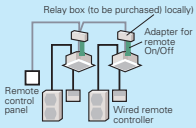 <br>(Example of 1 : 1 system x 2) | 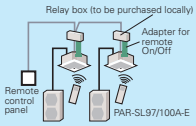 <br>(Example of 1 : 1 system x 2) | • Operation other than On/Off (e.g., adjustment of temperature, fan speed, and airflow) can be performed even when remote controller operation is prohibited.<br>• Timer control is possible with an external timer. | • Adapter for remote On/Off<br>**PAC-SE55RA-E**<br>• Relay box (to be purchased locally)<br>• Remote control panel (to be purchased locally) |
| **C Operation Control by Pulse Signal** | 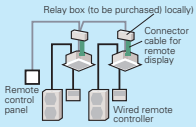 <br>(Example of 1 : 1 system x 2) | 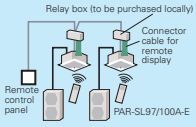 <br>(Example of 1 : 1 system x 2) | • The pulse signal can be turned On/Off.<br>• Operation/emergency signal can be received at a remote location. | • Connector cable for remote display<br>**PAC-SA88HA-E / PAC-725AD**<br>**(10 pcs. x PAC-SA88HA-E)**<br>• Relay box (to be purchased locally)<br>• Remote control panel (to be purchased locally) |
| **D Remote Display of Operating Status**<br>Operating status can be displayed at a remote location. | 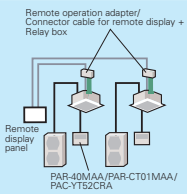 <br>(Example of 1 : 1 system) | 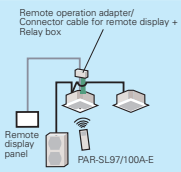 <br>(Example of Simultaneous Twin) | • Operation/emergency signal can be received at a remote location (when channeled through the **PAC-SF40RM-E** → no-voltage signal, when channeled through the **PAC-SA88HA-E** → DC 12V signal). | • Remote display panel (to be purchased locally)<br>• Connector cable for remote display<br>**PAC-SA88HA-E / PAC-725AD**<br>**(10 pcs. x PAC-SA88HA-E)**<br>• Relay box (to be purchased locally)<br>• Remote operation adapter<br>**PAC-SF40RM-E**<br>*Unable to use with wireless remote controller |
| **E Timer Operation**<br>Allows On/Off operation with timer<br>*For control by an external timer, refer to B Operation Control by Level Signal. | 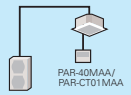 <br>(Example of 1 : 1 system) | | • **Weekly Timer:**<br>On/Off and up to 8 pattern temperatures can be set for each calendar day. (Initial setting)<br>• **On/Off Timer:**<br>On/Off can be set once each within 72 hr in intervals of 5-minute units.<br>• **Auto-off Timer:**<br>Operation will be switched off after a certain time elapse. Set time can be changed from 30 min. to 4 hr. at 10 min. intervals.<br>*Simple Timer and Auto-off Timer cannot be used at the same time. | Standard functions of<br>**PAR-40MAA / PAR-CT01MAA** |

# FUNCTION LIST (1)

| Category | | Icon | | M SERIES | | | | | | |
|---|---|---|---|---|---|---|---|---|---|---|
| | | | Combination: Indoor unit | MSZ-LN18/25/35/50/60VG2(W)(V)(R)(B) | MSZ-AP20/25/35/42/50/60/71VG | MSZ-FH25/35/50VE2 | MSZ-EF18/22/25/35/42/50VG(W)(B)(S) | MSZ-SF25/35/42/50VE3 | MSZ-GF60/71VE2 | MSZ-BT20/25/35/50VG |
| | | | Combination: Outdoor unit | MUZ-LN | MUZ-AP | MUZ-FH | MUZ-EF | MUZ-SF | MUZ-GF | MUZ-BT |
| Technology | | DC Inverter | | ● | ● | ● | ● | ● | ● | ● |
| | | Joint Lap DC Motor | | ● | ● | ● | ● | ● | ● | ● |
| | | Reluctance DC Rotary Compressor | | | | | | | | |
| | | Heating Caulking (Compressor) | | ● | ● | ● | ● | ● | | ● |
| | | DC Fan Motor | | ● | ● | ● | ● | ● | ● | ● |
| | | PAM (Pulse Amplitude Modulation) | | ● | ● | ● | ● | ● | ● | ● |
| | | Power Receiver and Twin LEV Control | | | | | | | | |
| | | Grooved Piping | | ● | ● | ● | ● | ● | ● | ● |
| Functions | i-see Sensor | Felt Temperature Control (3D i-see Sensor) | | ● | | ● | | | | |
| | | AREA Temperature Monitor | | ● | | ● | | | | |
| | Energy Saving | Econo Cool Energy-saving Feature | | ● | ● | ● | ● | ● | ● | ● |
| | | Standby Power Consumption Cut | | ● | ● | ● | ● | ● | ● | ● |
| | Air Quality | Plasma Quad Plus | | ● | | | | | | |
| | | Plasma Quad | | | | ● | | | | |
| | | Dual Barrier Coating | | ● | | | | | | |
| | | Silver-ionized Air Purifier Filter | | Opt | Opt | ● | ● | Opt | Opt | Opt |
| | | Air Purifying Filter | | | ● | | ● | ● | ● | ● |
| | Air Distribution | Double Vane | | ● | | ● | | | | |
| | | Horizontal Vane | | ● | ● | ● | ● | ● | ● | ● |
| | | Vertical Vane | | ● | ● | ● | | ● | | |
| | | High Ceiling Mode | | | | | | | | |
| | | Auto Fan Speed Mode | | ● | ● | ● | ● | ● | | ● |
| | Convenience | On/off Operation Timer | | ● | ● | ● | ● | ● | ● | ● |
| | | "i save" Mode | | ● | ● | ● | ● | ● | ● | ● |
| | | Auto Changeover | | ● | ● | ● | ● | ● | ● | ● |
| | | Auto Restart | | ● | ● | ● | ● | ● | ● | ● |
| | | Low-temperature Cooling | | ● | ● | ● | ● | ● | ● | ● |
| | | 10°C Heating | | ● | ● | | | | | ● |
| | | Low-noise Operation (Outdoor Unit) | | | | | | | | |
| | | Night Mode | | ● | ● | | | | | ● |
| | | Ampere Limit Adjustment | | | | | | | | |
| | | Operation Lock (Indoor) | | ● | ● | | | | | ● |
| | | Operation Lock (Outdoor) | | | | | | | | |
| | | Built-in Weekly Timer Function | | ● | ● | ● | ● | ● | ● | |
| | System Control | PAR-40MAA Control *3 | | Opt | Opt | Opt | Opt | Opt | Opt | Opt |
| | | PAR-CT01MAA Control *3 | | Opt | Opt | Opt | Opt | Opt | Opt | Opt |
| | | PAC-YT52CRA Control *3 | | Opt | Opt | Opt | Opt | Opt | Opt | Opt |
| | | Centralised On/Off Control *3 | | Opt | Opt | Opt | Opt | Opt | Opt | Opt |
| | | System Group Control *3 | | Opt | Opt | Opt | Opt | Opt | Opt | Opt |
| | | M-NET Connection *3 | | Opt | Opt | Opt | Opt | Opt | Opt | Opt |
| | | Wi-Fi Interface | | ● | Opt | Opt | Opt | Opt | Opt | Opt |
| | | Energy Consumption Monitoring through MELCloud | | | | | | | | |
| | | MXZ Connection | | | | | | | | |
| | Installation | Cleaning-free Pipe Reuse | | ● | ● | ● | ● | ● | ● | ● |
| | | Wiring/Piping Correction Function | | | | | | | | |
| | | Drain Pump | | | | | | | | |
| | | Flare Connection | | ● | ● | ● | ● | ● | ● | ● |
| | Maintenance | Self-Diagnosis Function (Check Code Display) | | ● | ● | ● | ● | ● | ● | ● |
| | | Failure Recall Function | | ● | ● | ● | ● | ● | ● | ● |

*1 When multiple indoor units connected to an MXZ outdoor unit are running at the same time, simultaneous cooling and heating is not possible.
*2 For the possible connectivity of MXZ outdoor units and indoor units, please refer to the list on pages 113-114 for details.
*3 Please refer to "System Control" on pages for details.
*4 When connected to MXZ outdoor units, the outdoor operating sound will not change.

| M SERIES | | | | | | | | |
|---|---|---|---|---|---|---|---|---|
| MSZ-WN25/35VA | MSZ-DM25/35VA | MSZ-HJ25/35/50VA | MSZ-HJ60/71VA | MSZ-HR25/35/42/50/60/71VF | MFZ-KJ25/35/50VE2 | MFZ-KT25/35/50/60VG | MLZ-KP25/35/50VF |
| MUZ-WN | MUZ-DM | MUZ-HJ | MUZ-HJ | MUZ-HR | MUFZ-KJ | SUZ-M | SUZ-M |
| ● | ● | ● | ● | ● | ● | ● | ● |
| ● | ● | ● | ● | ● | ● | ● | ● |
| | | | | | | | |
| ● | ● | ● | ● | ● | ● | ● | ● |
| ● | ● | | ● | | ● | ● | ● |
| ● | ● | ● | ● | ● | ● | ● | ● |
| | | | | | | | |
| ● | ● | ● | ● | ● | ● | ● | ● |
| | | | | | | | |
| | | | | | | | |
| ● | ● | ● | ● | ● | ● | ● | ● |
| | | | | | ● | ● | |
| | | | | | | | |
| | | | | | | | |
| | | | | | | | |
| | | | | Opt | ● | ● | Opt |
| | | | | | | | |
| | | | | | | | |
| ● | ● | ● | ● | ● | ● | ● | ● |
| | | | | | | | ● |
| | | | | | | | ● |
| ● | ● | ● | ● | ● | ● | ● | ● |
| ● | ● | ● | ● | ● | ● | ● | ● |
| | | | | ● | ● | ● | ● |
| | | | | ●*1 | ●*1 | ●*1 | ● |
| ● | ● | ● | ● | ● | ● | ● | ● |
| | | | | ● | ● | ● | ● |
| | | | | ● | | | |
| | | | | | | | |
| | | | | | | | |
| | | | | | | | |
| | | | | ● | | | |
| | | | | | | | |
| | | | | | ● | ● | ● |
| Opt | Opt | | | Opt | Opt | Opt | Opt |
| Opt | Opt | | | Opt | Opt | Opt | Opt |
| | Opt | | | Opt | Opt | Opt | Opt |
| | Opt | | | Opt | Opt | Opt | Opt |
| | Opt | | | Opt | Opt | Opt | Opt |
| | Opt | | | Opt | Opt | Opt | Opt |
| Opt | Opt | | | Opt | Opt | Opt | Opt |
| | | | | | | | |
| | | | | | | | |
| ● | ● | ● | ● | ● | ● | ● | ● |
| | | | | | | | ● |
| | | | | | | | ● |
| ● | ● | ● | ● | ● | ● | ● | ● |
| ● | ● | ● | ● | ● | ● | ● | ● |
| ● | ● | ● | ● | ● | ● | ● | ● |

• The figures listed in the table are “only when combined with an outdoor unit with the appropriate capacity range”.
• Opt: Separate parts must be purchased.

# FUNCTION LIST (2)

| Category | | Icon | | S SERIES | | | | | |
|---|---|---|---|---|---|---|---|---|---|
| | | | Indoor unit | SLZ-M15/25/35/50/60FA *4 | | | | SEZ-M25/35/50/60/71DA(L) | |
| | | | Outdoor unit | SUZ-M | SUZ-KA | PUZ-ZM | PUHZ-ZRP | SUZ-M | SUZ-KA |
| Technology | | DC Inverter | | ● | ● | ● | ● | ● | ● |
| | | Joint Lap DC Motor | | ● | ● | | | ● | ● |
| | | Magnetic Flux Vector Sine Wave Drive | | | | ● | ● | | |
| | | Reluctance DC Rotary Compressor | | ● | ● | | | ● | ● |
| | | Highly Efficient DC Scroll Compressor | | | | ● | ● | | |
| | | Heating Caulking (Compressor) | | ● | ● | | | ● | ● |
| | | DC Fan Motor | | ● | ● | ● | ● | ● | ● |
| | | Vector-Wave Eco Inverter | | | | ● | ● | | |
| | | PAM (Pulse Amplitude Modulation) | | ● | ● | ● | ● | ● | ● |
| | | Power Receiver and Twin LEV Control | | | | ● | ● | | |
| | | Grooved Piping | | ● | ● | ● | ● | ● | ● |
| Functions | i-see Sensor | Felt Temperature Control (3D i-see Sensor) | | Opt | Opt | Opt | Opt | | |
| | | AREA Temperature Monitor | | Opt | Opt | Opt | Opt | | |
| | Energy Saving | Demand Function | | | | | | | |
| | Attractive | Pure White | | ● | ● | ● | ● | | |
| | | Auto Vane | | ● | ● | ● | ● | | |
| | Air Quality | Fresh-air Intake | | ● | ● | ● | ● | | |
| | | High-efficiency Filter | | | | | | | |
| | | Oil Mist Filter | | | | | | | |
| | | Long-life Filter | | ● | ● | ● | ● | | |
| | | Filter Check Signal | | ● | ● | ● | ● | | |
| | Air Distribution | Horizontal Vane | | ● | ● | ● | ● | | |
| | | Vertical Vane | | | | | | | |
| | | High Ceiling Mode | | ● | ● | ● | ● | | |
| | | Low Ceiling Mode | | | | | | | |
| | | Auto Fan Speed Mode | | ● | ● | ● | ● | ● | ● |
| | Convenience | On/off Operation Timer | | ● | ● | ● | ● | ● | ● |
| | | Auto Changeover | | ● | ● | ● | ● | ● | ● |
| | | Auto Restart | | ● | ● | ● | ● | ● | ● |
| | | Low-temperature Cooling | | ● | ● | ● | ● | ● | ● |
| | | Low-noise Operation (Outdoor Unit) | | | | ● | ● | | |
| | | Ampere Limit Adjustment | | | | 60-140V | 60-140V | | |
| | | Operation Lock | | | | | | | |
| | | Rotation, Back-up and 2nd Stage Cut-in Functions | | | | ● | ● | | |
| | | Dual Set Point *3 | | | | ● | ● | | |
| | System Control | PAR-40MAA Control *1 | | Opt | Opt | Opt | Opt | Opt | Opt |
| | | PAR-CT01MAA Control *1 | | Opt | Opt | Opt | Opt | Opt | Opt |
| | | PAC-YT52CRA Control *1 | | Opt | Opt | Opt | Opt | Opt | Opt |
| | | Centraliesd On/Off Control *1 | | Opt | Opt | Opt | Opt | Opt | Opt |
| | | System Group Control *1 | | Opt | Opt | Opt | Opt | Opt | Opt |
| | | M-NET Connection *1 | | Opt | Opt | | | Opt | Opt |
| | | COMPO *2 | | | | 71-140 | 71-140 | | |
| | | Energy Consumption Monitoring through MELCloud | | | | | | | |
| | | MXZ Connection | | | | | | | |
| | Installation | Cleaning-free Pipe Reuse | | ● | ● | ● | ● | ● | ● |
| | | Reuse of Existing Wiring | | | | | | | |
| | | Wiring/Piping Correction Function | | | | | | | |
| | | Drain Pump | | ● | ● | ● | ● | Opt | Opt |
| | | Pump Down Switch | | | | | | | |
| | | Flare Connection | | ● | ● | ● | ● | ● | ● |
| | Maintenance | Self-Diagnosis Function (Check Code Display) | | ● | ● | ● | ● | ● | ● |
| | | Failure Recall Function | | ● | ● | ● | ● | ● | ● |

*1 Please refer to "System Control" on pages for details.
*2 Please refer to page 57 for details.
*3 This function is only available with PAR-40MAA, PAC-YT52CRA.
*4 SLZ-M15 can be connected with R32 MXZ only.

• If a numerical figure is listed, the feature is only available with the outdoor unit of that capacity.
• Opt: Optional parts must be purchased.

| Category | | Icon | | P SERIES | | | | | | | | | |
|---|---|---|---|---|---|---|---|---|---|---|---|---|---|
| | | | Combination Indoor unit | PLA-ZM35/50/60/71/100/125/140EA | | | PLA-M35/50/60/71/100/125/140EA | | | | | | |
| | | | Combination Outdoor unit | PUHZ-SHW | PUZ-ZM | PUHZ-ZRP | PUHZ-SHW | PUZ-ZM | PUHZ-ZRP | SUZ-M | SUZ-KA | PUZ-M | PUHZ-P |
| Technology | | DC Inverter | | ● | ● | ● | ● | ● | ● | ● | ● | ● | ● |
| | | Joint Lap DC Motor | | | 35-71 | 35-71 | | 35-71 | 35-71 | ● | ● | 100 | 100 |
| | | Magnetic Flux Vector Sine Wave Drive | | ● | ● | ● | ● | ● | ● | | | ● | ● |
| | | Reluctance DC Rotary Compressor | | | 35-71 | 35-71 | | 35-71 | 35-71 | ● | ● | 100-140 | 100-140 |
| | | Highly Efficient DC Scroll Compressor | | ● | 100-250 | 100-250 | ● | 100-250 | 100-250 | | | 200-250 | 200-250 |
| | | Heating Caulking (Compressor) | | | 35-71 | 35-71 | | 35-71 | 35-71 | ● | ● | 100 | 100 |
| | | DC Fan Motor | | ● | ● | ● | ● | ● | ● | ● | ● | ● | ● |
| | | Vector-Wave Eco Inverter | | ● | ● | ● | ● | ● | ● | | | ● | ● |
| | | PAM (Pulse Amplitude Modulation) | | ● | 35-140 | 35-140 | ● | 35-140 | 35-140 | ● | ● | 100-140V | 100-140V |
| | | Power Receiver and Twin LEV Control | | ● | 35-250 | 35-140 | ● | 35-250 | 35-140 | | | 100-250 | 100-140 |
| | | Grooved Piping | | ● | ● | ● | ● | ● | ● | ● | ● | ● | ● |
| Functions | i-see Sensor | Felt Temperature Control (3D i-see Sensor) | | Opt | Opt | Opt | Opt | Opt | Opt | Opt | Opt | Opt | Opt |
| | | AREA Temperature Monitor | | Opt | Opt | Opt | Opt | Opt | Opt | Opt | Opt | Opt | Opt |
| | Energy Saving | Demand Function | | Opt | Opt | Opt | Opt | Opt | Opt | | | Opt | Opt |
| | Attractive | Pure White | | ● | ● | ● | ● | ● | ● | ● | ● | ● | ● |
| | | Auto Vane | | ● | ● | ● | ● | ● | ● | ● | ● | ● | ● |
| | Air Quality | Fresh-air Intake | | ● | ● | ● | ● | ● | ● | ● | ● | ● | ● |
| | | High-efficiency Filter | | Opt | Opt | Opt | Opt | Opt | Opt | Opt | Opt | Opt | Opt |
| | | Oil Mist Filter | | | | | | | | | | | |
| | | Long-life Filter | | ● | ● | ● | ● | ● | ● | ● | ● | ● | ● |
| | | Filter Check Signal | | ● | ● | ● | ● | ● | ● | ● | ● | ● | ● |
| | Air Distribution | Horizontal Vane | | ● | ● | ● | ● | ● | ● | ● | ● | ● | ● |
| | | Vertical Vane | | | | | | | | | | | |
| | | High Ceiling Mode | | ● | ● | ● | ● | ● | ● | ● | ● | ● | ● |
| | | Low Ceiling Mode | | ● | ● | ● | ● | ● | ● | ● | ● | ● | ● |
| | | Auto Fan Speed Mode | | ● | ● | ● | ● | ● | ● | ● | ● | ● | ● |
| | Convenience | On/off Operation Timer | | ● | ● | ● | ● | ● | ● | ● | ● | ● | ● |
| | | Auto Changeover | | ● | ● | ● | ● | ● | ● | ● | ● | ● | ● |
| | | Auto Restart | | ● | ● | ● | ● | ● | ● | ● | ● | ● | ● |
| | | Low-temperature Cooling | | ● | ● | ● | ● | ● | ● | ● | ● | ● | ● |
| | | Low-noise Operation (Outdoor Unit) | | ● | ● | ● | ● | ● | ● | | | ● | ● |
| | | Ampere Limit Adjustment | | 112/140 | 60-140V 200/250 | 60-140V 200/250 | 112/140 | 60-140V 200/250 | 60-140V 200/250 | | | | |
| | | Operation Lock | | | | | | | | | | | |
| | | Rotation, Back-up and 2nd Stage Cut-in Functions | | ● | ● | ● | ● | ● | ● | | | ● | ● |
| | | Dual Set Point *4 | | | ● | ● | | ● | ● | | | ● | ● |
| | System Control | PAR-40MAA Control *1 | | Opt | Opt | Opt | Opt | Opt | Opt | Opt | Opt | Opt | Opt |
| | | PAR-CT01MAA Control *1 | | Opt | Opt | Opt | Opt | Opt | Opt | Opt | Opt | Opt | Opt |
| | | PAC-YT52CRA Control *1 | | Opt | Opt | Opt | Opt | Opt | Opt | Opt | Opt | Opt | Opt |
| | | Centraliesd On/Off Control *1 | | Opt | Opt | Opt | Opt | Opt | Opt | Opt | Opt | Opt | Opt |
| | | System Group Control *1 | | ● | ● | ● | ● | ● | ● | Opt | Opt | ● | ● |
| | | M-NET Connection *1 | | Opt | Opt | Opt | Opt | Opt | Opt | Opt | Opt | Opt | Opt |
| | | COMPO *2 | | ● | 71-250 | 71-250 | ● | 71-250 | 71-250 | | | ● | ● |
| | | Energy Consumption Monitoring through MELCloud | | | | | | | | | | | |
| | | MXZ Connection | | | | | | | | | | | |
| | Installation | Cleaning-free Pipe Reuse | | ● | ● | ● | ● | ● | ● | ● | ● | ● | ● |
| | | Reuse of Existing Wiring | | Opt | Opt | Opt | Opt | Opt | Opt | | | Opt | Opt |
| | | Wiring/Piping Correction Function | | | | | | | | | | | |
| | | Drain Pump | | ●*3 | ●*3 | ●*3 | ●*3 | ●*3 | ●*3 | ●*3 | ●*3 | ●*3 | ●*3 |
| | | Pump Down Switch | | ● | ● | ● | ● | ● | ● | | | ● | ● |
| | | Flare Connection | | ● | ● | ● | ● | ● | ● | ● | ● | ● | ● |
| | Maintenance | Self-Diagnosis Function (Check Code Display) | | ● | ● | ● | ● | ● | ● | ● | ● | ● | ● |
| | | Failure Recall Function | | ● | ● | ● | ● | ● | ● | ● | ● | ● | ● |

*1 Please refer to "System Control" on pages for details.
*2 Please refer to page 64 for details.
*3 PEAD-M JAL are not equipped with a drain pump.
*4 This function is only available with PAR-40MAA, PAC-YT52CRA.

• If a numerical figure is listed, the feature is only available with the outdoor unit of that capacity.
• Opt: Optional parts must be purchased.

# FUNCTION LIST (2)

| Category | | Icon | | P SERIES | | | | | | | | | | | | |
|---|---|---|---|---|---|---|---|---|---|---|---|---|---|---|---|---|
| | | | Combination: Indoor unit | PEAD-M35/50/60/71/100/125/140JA(L) | | | | | | PEAD-M35/50/60/71/JA(L) | PEA-RP200/250 WKA | | PKA-M35/50HA(L) | | | |
| | | | Combination: Outdoor unit | PUHZ -SHW | PUZ -ZM | PUHZ -ZRP | PUZ -M | PUHZ -P | SUZ -M | SUZ -KA | PUHZ -ZRP | PUHZ -P | PUZ -ZM | PUHZ -ZRP | PUZ -M | PUHZ -P |
| Technology | | DC Inverter | | ● | ● | ● | ● | ● | ● | ● | ● | ● | ● | ● | ● | ● |
| | | Joint Lap DC Motor | | | 35-71 | 35-71 | 100 | 100 | ● | ● | | | 35-71 | 35-71 | 100 | 100 |
| | | Magnetic Flux Vector Sine Wave Drive | | ● | ● | ● | ● | ● | | | ● | ● | ● | ● | ● | ● |
| | | Reluctance DC Rotary Compressor | | | 35-71 | 35-71 | 100-140 | 100-140 | ● | ● | | | 35-71 | 35-71 | ● | 100-140 |
| | | Highly Efficient DC Scroll Compressor | | ● | 100-250 | 100-250 | 200/250 | 200/250 | | | ● | ● | 100-200 | 100-200 | | 200 |
| | | Heating Caulking (Compressor) | | | 35-71 | 35-71 | 100 | 100 | ● | ● | | | 35-71 | 35-71 | | |
| | | DC Fan Motor | | ● | ● | ● | ● | ● | ● | ● | ● | ● | ● | ● | ● | ● |
| | | Vector-Wave Eco Inverter | | ● | ● | ● | ● | ● | | | ● | ● | ● | ● | ● | ● |
| | | PAM (Pulse Amplitude Modulation) | | ● | 35-140 | 35-140 | 100-140V | 100-140V | ● | ● | | | 35-140 | 35-140 | 100V-140V | 100V-140V |
| | | Power Receiver and Twin LEV Control | | ● | 35-250 | 35-140 | 100-250 | 100-140 | | | | | 35-250 | 35-140 | 100-140 | 100-140 |
| | | Grooved Piping | | ● | ● | ● | ● | ● | ● | ● | ● | ● | ● | ● | ● | ● |
| Functions | i-see Sensor | Felt Temperature Control (3D i-see Sensor) | | | | | | | | | | | | | | |
| | | AREA Temperature Monitor | | | | | | | | | | | | | | |
| | Energy Saving | Demand Function | | Opt | Opt | Opt | Opt | Opt | | | Opt | Opt | Opt | Opt | Opt | Opt |
| | Attractive | Pure White | | | | | | | | | | | ● | ● | ● | ● |
| | | Auto Vane | | | | | | | | | | | ● | ● | ● | ● |
| | Air Quality | Fresh-air Intake | | | | | | | | | | | | | | |
| | | High-efficiency Filter | | | | | | | | | | | | | | |
| | | Oil Mist Filter | | | | | | | | | | | | | | |
| | | Long-life Filter | | ● | ● | ● | ● | ● | ● | ● | | | | | | |
| | | Filter Check Signal | | ● | ● | ● | ● | ● | ● | ● | | | Opt | Opt | Opt | Opt |
| | Air Distribution | Horizontal Vane | | | | | | | | | | | ● | ● | ● | ● |
| | | Vertical Vane | | | | | | | | | | | | | | |
| | | High Ceiling Mode | | | | | | | | | | | | | | |
| | | Low Ceiling Mode | | | | | | | | | | | | | | |
| | | Auto Fan Speed Mode | | ● | ● | ● | ● | ● | ● | ● | | | ● | ● | ● | ● |
| | Convenience | On/off Operation Timer | | ● | ● | ● | ● | ● | ● | ● | ● | ● | ● | ● | ● | ● |
| | | Auto Changeover | | ● | ● | ● | ● | ● | ● | ● | ● | ● | ● | ● | ● | ● |
| | | Auto Restart | | ● | ● | ● | ● | ● | ● | ● | ● | ● | ● | ● | ● | ● |
| | | Low-temperature Cooling | | ● | ● | ● | ● | ● | ● | ● | ● | ● | ● | ● | ● | ● |
| | | Low-noise Operation (Outdoor Unit) | | ● | ● | ● | ● | ● | | | ● | ● | ● | ● | ● | ● |
| | | Ampere Limit Adjustment | | 112/140 | 60-140V 200/250 | 60-140V 200/250 | | | | | ● | | 60-140V 200/250 | 60-140V 200/250 | | |
| | | Operation Lock | | | | | | | | | | | | | | |
| | | Rotation, Back-up and 2nd Stage Cut-in Functions | | ● | ● | ● | ● | ● | | | | | ● | ● | ● | ● |
| | | Dual Set Point *4 | | | ● | ● | ● | ● | | | ● | ● | ● | ● | ● | ● |
| | System Control | PAR-40MAA Control *1 | | Opt | Opt | Opt | Opt | Opt | Opt | Opt | Opt | Opt | Opt | Opt | Opt | Opt |
| | | PAR-CT01MAA Control *1 | | Opt | Opt | Opt | Opt | Opt | Opt | Opt | Opt | Opt | Opt | Opt | Opt | Opt |
| | | PAC-YT52CRA Control *1 | | Opt | Opt | Opt | Opt | Opt | Opt | Opt | Opt | Opt | Opt | Opt | Opt | Opt |
| | | Centraliesd On/Off Control *1 | | Opt | Opt | Opt | Opt | Opt | Opt | Opt | | | Opt | Opt | Opt | Opt |
| | | System Group Control *1 | | ● | ● | ● | ● | ● | Opt | Opt | ● | ● | Opt | Opt | Opt | Opt |
| | | M-NET Connection *1 | | Opt | Opt | Opt | Opt | Opt | Opt | Opt | Opt | Opt | Opt | Opt | Opt | Opt |
| | | COMPO *2 | | ● | 71-250 | 71-250 | ● | ● | | | | | 71-250 | 71-250 | ● | ● |
| | | Energy Consumption Monitoring through MELCloud | | | | | | | | | | | | | | |
| | | MXZ Connection | | | | | | | | | | | | | | |
| | Installation | Cleaning-free Pipe Reuse | | ● | ● | ● | ● | ● | ● | ● | ● | ● | ● | ● | ● | ● |
| | | Reuse of Existing Wiring | | Opt | Opt | Opt | Opt | Opt | | | | | Opt | Opt | Opt | Opt |
| | | Wiring/Piping Correction Function | | | | | | | | | | | | | | |
| | | Drain Pump | | ●*3 | ●*3 | ●*3 | ●*3 | ●*3 | ●*3 | ●*3 | | | Opt | Opt | Opt | Opt |
| | | Pump Down Switch | | ● | ● | ● | ● | ● | | | ● | ● | ● | ● | ● | ● |
| | | Flare Connection | | ● | ● | ● | ● | ● | ● | ● | ● | ● | ● | ● | ● | ● |
| | Maintenance | Self-Diagnosis Function (Check Code Display) | | ● | ● | ● | ● | ● | ● | ● | ● | ● | ● | ● | ● | ● |
| | | Failure Recall Function | | ● | ● | ● | ● | ● | ● | ● | ● | ● | ● | ● | ● | ● |

*1 Please refer to "System Control" on pages for details.
*2 Please refer to page 64 for details.
*3 PEAD-M JAL are not equipped with a drain pump.
*4 This function is only available with PAR-40MAA, PAC-YT52CRA.

| P SERIES | | | | | | | | | | | | | | |
|---|---|---|---|---|---|---|---|---|---|---|---|---|---|---|
| PKA-M60/71/100KA(L) | | | | | PCA-M35/50/60/71/100/125/140KA | | | | | | PCA-M71HA | | PSA-RP71/100/125/140KA | |
| PUHZ-SHW | PUZ-ZM | PUHZ-ZRP | PUZ-M | PUHZ-P | PUZ-ZM | PUHZ-ZRP | PUZ-M | PUHZ-P | SUZ-M | SUZ-KA | PUZ-ZM | PUHZ-ZRP | PUHZ-ZRP | PUHZ-P |
| ● | ● | ● | ● | ● | ● | ● | ● | ● | ● | ● | ● | ● | ● | ● |
| | 60/71 | 60/71 | 100 | 100 | 35-71 | 35-71 | 100 | 100 | ● | ● | 71 | 71 | 71 | 100 |
| ● | ● | ● | ● | ● | ● | ● | ● | ● | | | ● | ● | ● | ● |
| | 60/71 | 60/71 | 100-140 | 100-140 | 35-71 | 35-71 | 100-140 | 100-140 | ● | ● | 71 | 71 | 71 | 100-140 |
| ● | 100-250 | 100-250 | 200/250 | 200/250 | 100-250 | 100-250 | 200/250 | 200/250 | | | 100-250 | 100-250 | 100-250 | 200/250 |
| | 60/71 | 60/71 | 100 | 100 | 35-71 | 35-71 | 100 | 100 | ● | ● | 71 | 71 | 71 | 100 |
| ● | ● | ● | ● | ● | ● | ● | ● | ● | ● | ● | ● | ● | ● | ● |
| ● | ● | ● | ● | ● | ● | ● | ● | ● | | | ● | ● | ● | ● |
| ● | 60-140 | 60-140 | 100-140V | 100-140V | 35-140 | 35-140 | 100-140V | 100-140V | ● | ● | 71-140 | 71-140 | 71-140 | 100-140V |
| ● | 60-250 | 60-140 | 100-250 | 100-140 | 35-250 | 35-140 | 100-250 | 100-140 | | | 71-250 | 71-140 | 71-140 | 100-140 |
| ● | ● | ● | ● | ● | ● | ● | ● | ● | ● | ● | ● | ● | ● | ● |
| | | | | | | | | | | | | | | |
| | | | | | | | | | | | | | | |
| Opt | Opt | Opt | Opt | Opt | Opt | Opt | Opt | Opt | | | Opt | Opt | Opt | Opt |
| ● | ● | ● | ● | ● | ● | ● | ● | ● | ● | ● | | | ● | ● |
| ● | ● | ● | ● | ● | ● | ● | ● | ● | ● | ● | | | | |
| | | | | | ● | ● | ● | ● | ● | ● | ● | ● | | |
| | | | | | Opt | Opt | Opt | Opt | Opt | Opt | | | | |
| | | | | | | | | | | | ● | ● | | |
| | | | | | ● | ● | ● | ● | ● | ● | | | ● | ● |
| Opt | Opt | Opt | Opt | Opt | ● | ● | ● | ● | ● | ● | ● | ● | ● | ● |
| ● | ● | ● | ● | ● | ● | ● | ● | ● | ● | ● | | | | |
| | | | | | | | | | | | | | ● | ● |
| | | | | | ● | ● | ● | ● | ● | ● | | | | |
| | | | | | ● | ● | ● | ● | ● | ● | | | | |
| ● | ● | ● | ● | ● | ● | ● | ● | ● | ● | ● | | | ● | ● |
| ● | ● | ● | ● | ● | ● | ● | ● | ● | ● | ● | ● | ● | ● | ● |
| ● | ● | ● | ● | ● | ● | ● | ● | ● | ● | ● | ● | ● | ● | ● |
| ● | ● | ● | ● | ● | ● | ● | ● | ● | ● | ● | ● | ● | ● | ● |
| ● | ● | ● | ● | ● | ● | ● | ● | ● | ● | ● | ● | ● | ● | ● |
| ● | ● | ● | ● | ● | ● | ● | ● | ● | | | ● | ● | ● | ● |
| 112/140 | 60-140V 200/250 | 60-140V 200/250 | | | 60-140V 200/250 | 60-140V 200/250 | | | | | | 71-140V 200/250 | 71-140V 200/250 | |
| | | | | | | | | | | | | | | |
| ● | ● | ● | ● | ● | ● | ● | ● | ● | | | ● | ● | | |
| | ● | ● | ● | ● | ● | ● | ● | ● | | | | | | |
| Opt | Opt | Opt | Opt | Opt | Opt | Opt | Opt | Opt | Opt | Opt | Opt | Opt | | |
| Opt | Opt | Opt | Opt | Opt | Opt | Opt | Opt | Opt | Opt | Opt | Opt | Opt | | |
| Opt | Opt | Opt | Opt | Opt | Opt | Opt | Opt | Opt | Opt | Opt | Opt | Opt | | |
| Opt | Opt | Opt | Opt | Opt | Opt | Opt | Opt | Opt | Opt | Opt | Opt | Opt | Opt | Opt |
| Opt | Opt | Opt | Opt | Opt | ● | ● | ● | ● | Opt | Opt | ● | ● | Opt | Opt |
| Opt | Opt | Opt | Opt | Opt | Opt | Opt | Opt | Opt | Opt | Opt | Opt | Opt | Opt | Opt |
| ● | 71-250 | 71-250 | ● | ● | 71-250 | 71-250 | ● | ● | | | 71-250 | 71-250 | 71-250 | ● |
| | | | | | | | | | | | | | | |
| | | | | | | | | | | | | | | |
| ● | ● | ● | ● | ● | ● | ● | ● | ● | ● | ● | ● | ● | ● | ● |
| Opt | Opt | Opt | Opt | Opt | Opt | Opt | Opt | Opt | | | Opt | Opt | Opt | Opt |
| | | | | | | | | | | | | | | |
| Opt | Opt | Opt | Opt | Opt | Opt | Opt | Opt | Opt | Opt | Opt | | | | |
| ● | ● | ● | ● | ● | ● | ● | ● | ● | | | ● | ● | ● | ● |
| ● | ● | ● | ● | ● | ● | ● | ● | ● | ● | ● | ● | ● | ● | ● |
| ● | ● | ● | ● | ● | ● | ● | ● | ● | ● | ● | ● | ● | ● | ● |
| ● | ● | ● | ● | ● | ● | ● | ● | ● | ● | ● | ● | ● | ● | ● |

• If a numerical figure is listed, the feature is only available with the outdoor unit of that capacity.
• Opt: Optional parts must be purchased.

# FUNCTION LIST (2)

| Category | | Icon | MXZ SERIES | | | | | | | | | | | | | |
|---|---|---|---|---|---|---|---|---|---|---|---|---|---|---|---|---|
| | | Series | Std | | | | | Lo-std | | H2i | | Std | | | Lo-std | |
| | | Outdoor unit | MXZ-VA(2) | | | | | MXZ-VA | | MXZ-VA | | MXZ-VF | | | MXZ-VF | |
| | | | 2D | 3E | 4E | 5E | 6D | 2DM | 3DM | 2E | 4E | 2F | 3F | 4F | 2HA | 3HA |
| Technology | | DC Inverter | ● | ● | ● | ● | ● | ● | ● | ● | ● | ● | ● | ● | ● | ● |
| | | Joiint Lap DC Motor | ● | ● | ● | ● | | ● | ● | ● | | ● | ● | ● | ● | ● |
| | | Magnetic Flux Vector Sine Wave Drive | | | | | | | | | | | | | | |
| | | Reluctance DC Rotary Comperssor | | | 83 | ● | ● | | | | | | | | | |
| | | Highly Efficient DC Scroll Compressor | | | | | | | | | | | | | | |
| | | Heating Caulking (Compressor) | ● | ● | ● | ● | ● | ● | ● | ● | ● | ● | ● | ● | ● | ● |
| | | DC Fan Motor | ● | ● | ● | ● | ● | ● | ● | ● | ● | ● | ● | ● | ● | ● |
| | | Vector-Wave Eco Inverter | | | | | | | | | | | | | | |
| | | PAM (Pulse Amplitude Modulation) | ● | ● | ● | ● | ● | ● | ● | ● | ● | ● | ● | ● | ● | ● |
| | | Power Receiver and Twin LEV Control | | ● | 72 | | | | ● | | | | ● | ● | | ● |
| | | Grooved Piping | ● | ● | ● | ● | ● | ● | ● | ● | ● | ● | ● | ● | ● | ● |
| Functions | i-see Sensor | Felt Temperature Control (3D i-see) | | | | | | | | | | | | | | |
| | | AREA Temperature Monitor | | | | | | | | | | | | | | |
| | Energy Saving | Demand Function | | | | | | | | | | | | | | |
| | Attractive | Pure White | | | | | | | | | | | | | | |
| | | Auto Vane | | | | | | | | | | | | | | |
| | Air Quality | Fresh-air Intake | | | | | | | | | | | | | | |
| | | High-efficiency Filter | | | | | | | | | | | | | | |
| | | Oil Mist Filter | | | | | | | | | | | | | | |
| | | Filter Check Signal | | | | | | | | | | | | | | |
| | Air Distribution | Horizontal Vane | | | | | | | | | | | | | | |
| | | Vertical vane | | | | | | | | | | | | | | |
| | | High Ceiling Mode | | | | | | | | | | | | | | |
| | | Auto Fan Speed Mode | | | | | | | | | | | | | | |
| | Convenience | On/off Operation Timer | | | | | | | | | | | | | | |
| | | Auto Changeover | ● | ● | ● | ● | ● | ● | ● | ● | ● | ● | ● | ● | ● | ● |
| | | Auto Restart | ● | ● | ● | ● | ● | ● | ● | ● | ● | ● | ● | ● | ● | ● |
| | | Low- temperature Cooling | ● | ● | ● | ● | ● | ● | ● | ● | ● | ● | ● | ● | ● | ● |
| | | 10°C Heating | ●*1 | ●*1 | ●*1 | ●*1 | ●*1 | | | ●*1 | ●*1 | ●*1 | ●*1 | ●*1 | | |
| | | Low-noise Operation (Outdoor) | ● | ● | ● | ● | ● | ● | ● | ● | ● | ● | ● | ● | ● | ● |
| | | Night Mode | | | | | | | | | | | | | | |
| | | Ampere Linit Adjustment | | | 83 | ● | ● | | | ● | ● | | | | | |
| | | Operation Lock (Indoor) | | | | | | | | | | | | | | |
| | | Operation Lock (Outdoor) | ● | ● | ● | ● | ● | ● | ● | ● | ● | ● | ● | ● | ● | ● |
| | | Built-in Weekly Timer Function | | | | | | | | | | | | | | |
| | | Rotation, Back-up abd 2nd Stage Cut-in Functions | | | | | | | | | | | | | | |
| | | Dual Set Point | | | | | | | | | | | | | | |
| | System Control | PAR-40MAA Control | Opt | Opt | Opt | Opt | Opt | Opt | Opt | Opt | Opt | Opt | Opt | Opt | Opt | Opt |
| | | PAR-CT01MAA Cotrol | Opt | Opt | Opt | Opt | Opt | Opt | Opt | Opt | Opt | Opt | Opt | Opt | Opt | Opt |
| | | PAC-YT52CRA Control | Opt | Opt | Opt | Opt | Opt | Opt | Opt | Opt | Opt | Opt | Opt | Opt | Opt | Opt |
| | | Centralised On/off Control | Opt | Opt | Opt | Opt | Opt | Opt | Opt | Opt | Opt | Opt | Opt | Opt | Opt | Opt |
| | | System Group Control | Opt | Opt | Opt | Opt | Opt | Opt | Opt | Opt | Opt | Opt | Opt | Opt | Opt | Opt |
| | | M-NET Connection | | | Opt (83) | Opt | Opt | | | Opt | Opt | | | | | |
| | | Wi-Fi Interface | | | | | | | | | | | | | | |
| | | Energy/Consumption Monitaring trouth MEL Cloud | | | | | | | | | | | | | | |
| | | COMPO | | | | | | | | | | | | | | |
| | | MXZ Connection | ●*2 | ●*2 | ●*2 | ●*2 | ●*2 | ●*2 | ●*2 | ●*2 | ●*2 | ●*2 | ●*2 | ●*2 | ●*2 | ●*2 |
| | Installation | Cleaning-free Pipe Reuse | | | | | | | | | | ●*3 | | | ●*3 | ●*3 |
| | | Reuse of Existing Wiring | | | | | | | | | | | | | | |
| | | Wiring/Piping Correction Function | ● | ● | ● | ● | ● | ● | ● | ● | ● | ● | ● | ● | ● | ● |
| | | Drain Pump | | | | | | | | | | | | | | |
| | | Pump Down Switch | | ● | ● | ● | ● | | ● | | ● | | ● | ● | | ● |
| | | Flare Connection | ● | ● | ● | ● | ● | ● | ● | ● | ● | ● | ● | ● | ● | ● |
| | Maintenance | Self-Diagnosis Function (Check Code Display) | ● | ● | ● | ● | ● | ● | ● | ● | ● | ● | ● | ● | ● | ● |
| | | Failure Recall Function | ● | ● | ● | ● | ● | ● | ● | ● | ● | ● | ● | ● | ● | ● |

*1 When multiple indoor units connected to an MXZ outdoor unit are running at the same time, simultaneous cooling and heating is not possible.
*2 For the possible connectivity of MXZ outdoor units and indoor units, please refer to the list on pages 113 for details.
*3 Please refer to “System Control” on pages for details.

| MXZ SERIES | | | | | |
|---|---|---|---|---|---|
| Std | | | | | |
| MXZ-VF2 | | | MXZ-VF3 | | |
| 2F | 3F | 4F | 2F | 3F | 4F |
| ● | ● | ● | ● | ● | ● |
| ● | ● | ● | ● | ● | ● |
| | | | | | |
| | | | | | |
| | | | | | |
| ● | ● | ● | ● | ● | ● |
| ● | ● | ● | ● | ● | ● |
| | | | | | |
| ● | ● | ● | ● | ● | ● |
| | ● | ● | | ● | ● |
| ● | ● | ● | ● | ● | ● |
| | | | | | |
| | | | | | |
| | | | | | |
| | | | | | |
| | | | | | |
| | | | | | |
| | | | | | |
| | | | | | |
| | | | | | |
| | | | | | |
| | | | | | |
| | | | | | |
| | | | | | |
| | | | | | |
| | | | | | |
| ● | ● | ● | ● | ● | ● |
| ● | ● | ● | ● | ● | ● |
| ● | ● | ● | ● | ● | ● |
| ●*1 | ●*1 | ●*1 | ●*1 | ●*1 | ●*1 |
| ● | ● | ● | ● | ● | ● |
| | | | | | |
| | | | | | |
| | | | | | |
| ● | ● | ● | ● | ● | ● |
| | | | | | |
| | | | | | |
| | | | | | |
| Opt | Opt | Opt | Opt | Opt | Opt |
| Opt | Opt | Opt | Opt | Opt | Opt |
| Opt | Opt | Opt | Opt | Opt | Opt |
| Opt | Opt | Opt | Opt | Opt | Opt |
| Opt | Opt | Opt | Opt | Opt | Opt |
| | | | | | |
| | | | | | |
| | | | | | |
| | | | | | |
| ●*2 | ●*2 | ●*2 | ●*2 | ●*2 | ●*2 |
| ●*3 | ●*3 | ● 3 | ●*3 | ●*3 | ●*3 |
| | | | | | |
| ● | ● | ● | ● | ● | ● |
| | | | | | |
| | ● | ● | | ● | ● |
| ● | ● | ● | ● | ● | ● |
| ● | ● | ● | ● | ● | ● |
| ● | ● | ● | ● | ● | ● |

- The figures listed in the table are “only when combined with an outdoor unit with the appropriate capacity range”.
- Opt: Separate parts must be purchased.

# Major Optional Parts

| Part Name | Description |
|---|---|
| **Deodorising Filter**<br>Captures small foul-smelling substances in the air. | 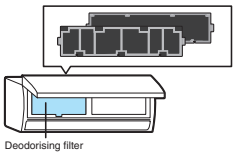 |
| **Air-cleaning Filter**<br>Removes fine dust particles from the air by means of static electricity. | 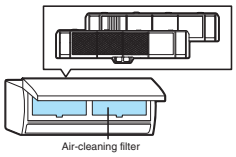 |
| **Silver-ionized Air Purifier Filter**<br>Captures the bacteria, pollen and other allergens in the air and neutralises them. | 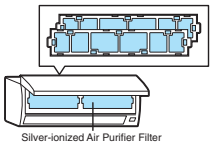 |
| **Oil Mist Filter Element**<br>Filter element (12 pieces) that blocks the oil mist for ceiling-suspended models used in professional kitchens. | 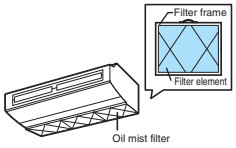 |
| **High-efficiency Filter Element**<br>Element for high-efficiency filter. Removes fine dust particles from the air. | 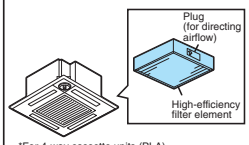 <br>*For 4-way cassette units (PLA) |
| **3D i-see Sensor Corner Panel for SLZ**<br>Corner panel holding the 3D i-see Sensor. | 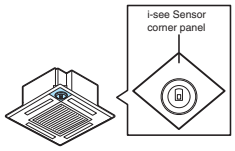 |
| **3D i-see Sensor Corner Panel for PLA**<br>Corner panel holding the 3D i-see Sensor. | 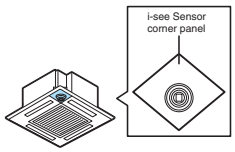 |
| **Shutter Plate**<br>Plate for blocking an air outlet of the 4-way cassette (PLA) indoor unit. | 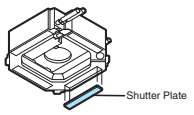 |
| **Multi-functional Casement**<br>Casement for fresh-air intake and attaching the high-efficiency filter element (optional). | 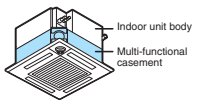 |
| **Fresh-air Intake Duct Flange**<br>Flange attachment for adding a duct to take in fresh air from outside. | <br>*For 4-way cassette units (PLA) |
| **Space Panel**<br>Decorative cover for the installation when the ceiling height is low. | 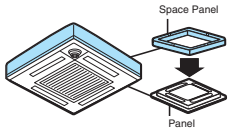 |

| Part Name | Description |
|---|---|
| **Drain Pump**<br>Pumps drain water to a point higher than that where the unit is installed. | 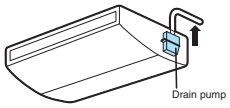 <br>*for ceiling-suspended units |
| **Decorative Cover**<br>To be attached to the upper section of ceiling-suspended models for professional kitchen use. Helps prevent dust accumulation. | 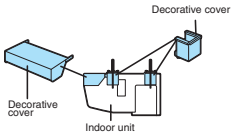 |
| **MA & Contact Terminal Interface**<br>Interface for connecting with the PAR-40MAA remote controller and PAC-YT52CRA, and to relay operation signals. | 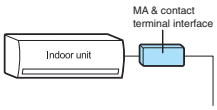 |
| **System Control Interface**<br>Interface to connect with M-NET controllers. | 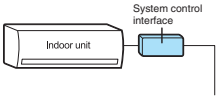 |
| **Wi-Fi Interface**<br>Interface enabling users to control air conditioners and check operating status via devices such as personal computers, tablets and smartphones. | 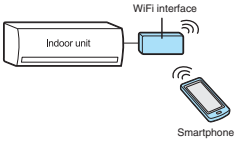 |
| **Connector Cable**<br>This product is an adaptor which inputs the incoming signals from an open/close switch to the air conditioner and outputs the on/off signals from the air conditioner to the back-up heater. | 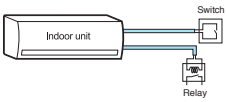 |
| **Power Supply Terminal Kit**<br>Terminal bed to change the power supply from outdoor power supply to separate indoor/outdoor power supplies. | 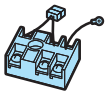 |
| **Wired Remote Controller**<br>Advanced deluxe remote controller with full-dot liquid-crystal display and backlight.<br>Equipped with convenient functions like night-setback. | |
| **MA Touch Remote Controller**<br>Remote controller with the full color touch display. Smartphone/Tublet App is available for setting, customize and control. | |
| **Simple Wired Remote Controller**<br>Remote controller with liquid-crystal display, and backlight function for operation in dark location. | |
| **Remote Controller Terminal Block Kit for PKA**<br>The terminal block is used as a relay to wire an indoor unit and to two remote controllers or to wire a remote controller and multiple indoor units in order to perform group control. | 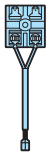 |

| Part Name | Description |
|---|---|
| **Wireless Remote Controller Signal Sender**<br>Handheld unit for sending operation signals to the indoor unit. | 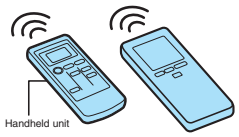 |
| **Wireless Remote Controller Signal Receiver**<br>Receives operation signals from the wireless remote controller handheld unit. | 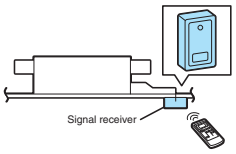 |
| **Wireless Remote Controller Kit (Sender & Receiver)**<br>Remote controller handheld unit (signal sender) and receiver (signal receiver) for ceiling-suspended units. | 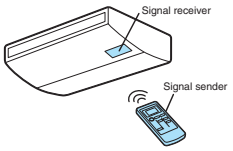 |
| **Control Holder**<br>Holder for storing the remote controller. | 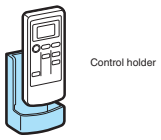 |
| **Remote Sensor**<br>Sensor to detect the room temperature at remote positions. | 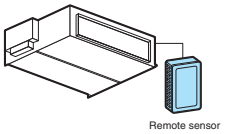 |
| **Remote On/Off Adapter**<br>Connector for receiving signals from the local system to control the on/off function. | 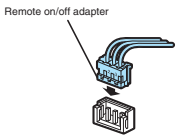 |
| **Remote Operation Adapter**<br>Adapter to display the operation status and control on/off function from a distance. | 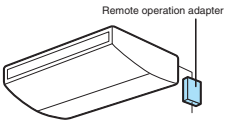 |
| **Connector Cable for Remote Display**<br>Connector used to display the operation status and control on/off function from a distance. | 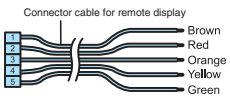 |
| **Distribution Pipe**<br>Branch pipe for P Series simultaneous multi-system use, or to connect two branch boxes for PUMY. | 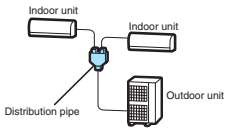 <br>*P Series with 2 indoor units |
| **Joint Pipe**<br>Part for connecting refrigerant pipes of different diametres. | 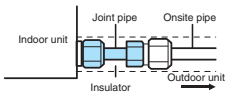 |
| **Liquid Refrigerant Dryer**<br>Removes water and minute particles from refrigerant pipes. | 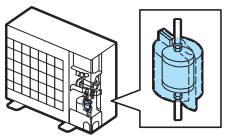 |
| **Branch Box Outer Cover**<br>Casement for branch boxes. | 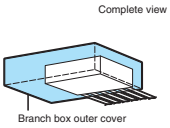 |

| Part Name | Description |
|---|---|
| **Air Discharge Guide**<br>Changes the direction of air being exhausted from the outdoor unit. | 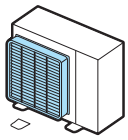 |
| **Air Protection Guide**<br>Protects the outdoor unit from the wind. | 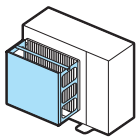 |
| **Drain Socket**<br>A set of caps to cover unnecessary holes at the bottom of the outdoor unit, and a socket to guide drain water to the local drain pipe. | 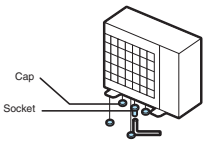 |
| **Centralised Drain Pan**<br>Catches drain water generated by the outdoor unit. | 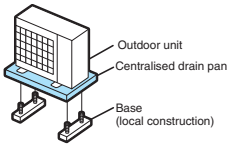 |
| **M-NET Converter**<br>Used to connect P Series A-control models to M-NET controllers. | 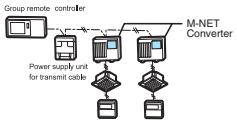 |
| **Control/Service Tool**<br>Monitoring tool to display operation and self-diagnosis data. | 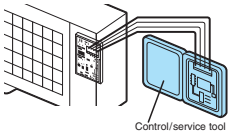 |
| **Step Interface**<br>Interface for adjusting the capacity of inverter-equipped outdoor units. | 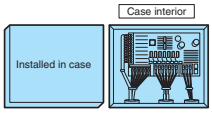 |
| **High-static Fan Motor**<br>Static pressure enhanced up to +30pa. | 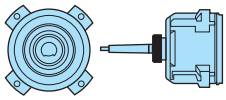 |

# Optional Parts List <Indoor>

| Indoor Unit \ Option | | | Filter: Silver-ionized Air Purifier Filter | | | | Filter: Deodorising Filter | | Softdry cloth | System Control Interface | MA & Contact Terminal Interface | Wi-Fi Interface | Connector Cable | | Wired Remote Controller: Controller | | | Wired Remote Controller: Controller Holder |
|---|---|---|---|---|---|---|---|---|---|---|---|---|---|---|---|---|---|---|
| | | | MAC-2360 FT | MAC-2370 FT | MAC-2380 FT | MAC-2390 FT | MAC-3000 FT-E | MAC-3010 FT-E | MAC-1001 CL-E | MAC-334IF-E | MAC-397IF-E | MAC-567IF-E | MAC-1702RA-E | MAC-1710RA-E | PAR-40MAA | PAR-CT01MAA | PAC-YT52CRA | MAC-1200RC |
| M SERIES | Wall-mounted | MSZ-LN18VG2(W)(V)(R)(B) | | | | ● | | ● | ● | ● | ● | | ● | ● | ●*1 | ●*1 | ●*1 | |
| | | MSZ-LN25VG2(W)(V)(R)(B) | | | | ● | | ● | ● | ● | ● | | ● | ● | ●*1 | ●*1 | ●*1 | |
| | | MSZ-LN35VG2(W)(V)(R)(B) | | | | ● | | ● | ● | ● | ● | | ● | ● | ●*1 | ●*1 | ●*1 | |
| | | MSZ-LN50VG2(W)(V)(R)(B) | | | | ● | | ● | ● | ● | ● | | ● | ● | ●*1 | ●*1 | ●*1 | |
| | | MSZ-LN60VG2(W)(V)(R)(B) | | | | ● | | ● | ● | ● | ● | | ● | ● | ●*1 | ●*1 | ●*1 | |
| | | MSZ-AP15VG | | | | | | | | ● | ● | ● | | | ●*1 | ●*1 | ●*1 | |
| | | MSZ-AP20VG | | | | | | | | ● | ● | ● | | | ●*1 | ●*1 | ●*1 | |
| | | MSZ-AP25VG | | ● | | | | | | ● | ● | ● | | | ●*1 | ●*1 | ●*1 | |
| | | MSZ-AP35VG | | ● | | | | | | ● | ● | ● | | | ●*1 | ●*1 | ●*1 | |
| | | MSZ-AP42VG | | ● | | | | | | ● | ● | ● | | | ●*1 | ●*1 | ●*1 | |
| | | MSZ-AP50VG | | ● | | | | | | ● | ● | ● | | | ●*1 | ●*1 | ●*1 | |
| | | MSZ-AP60VG | | ● | | | | | | ● | ● | ● | ● | ● | ●*1 | ●*1 | ●*1 | |
| | | MSZ-AP71VG | | ● | | | | | | ● | ● | ● | ● | ● | ●*1 | ●*1 | ●*1 | |
| | | MSZ-FH25VE2 | | | ● | | ● | | | ● | ● | ● | ● | ● | ●*1 | ●*1 | ●*1 | |
| | | MSZ-FH35VE2 | | | ● | | ● | | | ● | ● | ● | ● | ● | ●*1 | ●*1 | ●*1 | |
| | | MSZ-FH50VE2 | | | ● | | ● | | | ● | ● | ● | ● | ● | ●*1 | ●*1 | ●*1 | |
| | | MSZ-EF18VG(W)(B)(S) | | ● | | | | | ● | ● | ● | ● | | | ●*1 | ●*1 | ●*1 | |
| | | MSZ-EF22VG(W)(B)(S) | | ● | | | | | ● | ● | ● | ● | | | ●*1 | ●*1 | ●*1 | |
| | | MSZ-EF25VG(W)(B)(S) | | ● | | | | | ● | ● | ● | ● | | | ●*1 | ●*1 | ●*1 | |
| | | MSZ-EF35VG(W)(B)(S) | | ● | | | | | ● | ● | ● | ● | | | ●*1 | ●*1 | ●*1 | |
| | | MSZ-EF42VG(W)(B)(S) | | ● | | | | | ● | ● | ● | ● | | | ●*1 | ●*1 | ●*1 | |
| | | MSZ-EF50VG(W)(B)(S) | | ● | | | | | ● | ● | ● | ● | | | ●*1 | ●*1 | ●*1 | |
| | | MSZ-SF15VA | | | | | | | | ● | ● | ● | | | ●*1 | ●*1 | ●*1 | |
| | | MSZ-SF20VA | | | | | | | | ● | ● | ● | | | ●*1 | ●*1 | ●*1 | |
| | | MSZ-SF25VE3 | | ● | | | | | | ● | ● | ● | | | ●*1 | ●*1 | ●*1 | |
| | | MSZ-SF35VE3 | | ● | | | | | | ● | ● | ● | | | ●*1 | ●*1 | ●*1 | |
| | | MSZ-SF42VE3 | | ● | | | | | | ● | ● | ● | | | ●*1 | ●*1 | ●*1 | |
| | | MSZ-SF50VE3 | | ● | | | | | | ● | ● | ● | | | ●*1 | ●*1 | ●*1 | |
| | | MSZ-GF60VE2 | ● | | | | | | | ● | ● | ● | | | ●*1 | ●*1 | ●*1 | |
| | | MSZ-GF71VE2 | ● | | | | | | | ● | ● | ● | | | ●*1 | ●*1 | ●*1 | |
| | | MSZ-BT20VG | | ● | | | | | | ● | ● | ● | ● | ● | ●*1 | ●*1 | ●*1 | |
| | | MSZ-BT25VG | | ● | | | | | | ● | ● | ● | ● | ● | ●*1 | ●*1 | ●*1 | |
| | | MSZ-BT35VG | | ● | | | | | | ● | ● | ● | ● | ● | ●*1 | ●*1 | ●*1 | |
| | | MSZ-BT50VG | | ● | | | | | | ● | ● | ● | ● | ● | ●*1 | ●*1 | ●*1 | |
| | | MSZ-WN25VA | | ● | | | | | | ● | ● | ● | ● | ● | ● | ● | ● | |
| | | MSZ-WN35VA | | ● | | | | | | ● | ● | ● | ● | ● | ● | ● | ● | |
| | | MSY-TP35VF | | ● | | | | | | ● | ● | ● | ● | ● | ● | ● | ● | |
| | | MSY-TP50VF | | ● | | | | | | ● | ● | ● | ● | ● | ● | ● | ● | |
| | | MSZ-DM25VA | | ● | | | | | | ● | ● | ● | ● | ● | ●*1 | ●*1 | ●*1 | |
| | | MSZ-DM35VA | | ● | | | | | | ● | ● | ● | ● | ● | ●*1 | ●*1 | ●*1 | |
| | | MSZ-HJ25VA | | ● | | | | | | | | | ● | ● | | | | ● |
| | | MSZ-HJ35VA | | ● | | | | | | | | | ● | ● | | | | ● |
| | | MSZ-HJ50VA | | ● | | | | | | | | | ● | ● | | | | ● |
| | | MSZ-HJ60VA | | ● | | | | | | | | | ● | ● | | | | ● |
| | | MSZ-HJ71VA | | ● | | | | | | | | | ● | ● | | | | ● |
| | | MSZ-HR25VF | | ● | | | | | | ● | ● | ● | ● | ● | ● | ● | ● | ● |
| | | MSZ-HR35VF | | ● | | | | | | ● | ● | ● | ● | ● | ● | ● | ● | ● |
| | | MSZ-HR42VF | | ● | | | | | | ● | ● | ● | ● | ● | ● | ● | ● | ● |
| | | MSZ-HR50VF | | ● | | | | | | ● | ● | ● | ● | ● | ● | ● | ● | ● |
| | | MSZ-HR60VF | | ● | | | | | | ● | ● | ● | | | ●*1 | ●*1 | ●*1 | |
| | | MSZ-HR71VF | | ● | | | | | | ● | ● | ● | | | ●*1 | ●*1 | ●*1 | |
| | Floor-standing | MFZ-KJ25VE2 | | ● | | | | | | ● | ● | ● | ● | ● | ●*1 | ●*1 | ●*1 | |
| | | MFZ-KJ35VE2 | | ● | | | | | | ● | ● | ● | ● | ● | ●*1 | ●*1 | ●*1 | |
| | | MFZ-KJ50VE2 | | ● | | | | | | ● | ● | ● | ● | ● | ●*1 | ●*1 | ●*1 | |
| | | MFZ-KT25VG | | ● | | | | | | ● | ● | ● | ● | ● | ●*1 | ●*1 | ●*1 | |
| | | MFZ-KT35VG | | ● | | | | | | ● | ● | ● | ● | ● | ●*1 | ●*1 | ●*1 | |
| | | MFZ-KT50VG | | ● | | | | | | ● | ● | ● | ● | ● | ●*1 | ●*1 | ●*1 | |
| | | MFZ-KT60VG | | ● | | | | | | ● | ● | ● | ● | ● | ●*1 | ●*1 | ●*1 | |
| | 1-way cassette | MLZ-KP25VF | | ● | | | | | | ● | ● | ● | ● | ● | ●*1 | ●*1 | ●*1 | |
| | | MLZ-KP35VF | | ● | | | | | | ● | ● | ● | ● | ● | ●*1 | ●*1 | ●*1 | |
| | | MLZ-KP50VF | | ● | | | | | | ● | ● | ● | ● | ● | ●*1 | ●*1 | ●*1 | |

*1 MAC-334IF-E or MAC-397IF-E is required.

# Optional Parts List <Indoor>

| Indoor Unit \ Option | | | Filter: Oil Mist Filter Element | Filter: High-efficiency Filter Element | | | | Filter: Filter Box | | | | 3D i-see Sensor Corner Panel | | Shutter Plate | Multi-functional Casement | Fresh-air Intake Duct Flange | | Space Panel | Drain Pump | | | | | | Decorative Cover | | System Control Interface |
|---|---|---|---|---|---|---|---|---|---|---|---|---|---|---|---|---|---|---|---|---|---|---|---|---|---|---|---|
| | | | PAC-SG38KF-E | PAC-SH59KF-E | PAC-SH88KF-E | PAC-SH89KF-E | PAC-SH90KF-E | PAC-KE92TB-E | PAC-KE93TB-E | PAC-KE94TB-E | PAC-KE95TB-E | PAC-SF1ME-E | PAC-SE1ME-E | PAC-SJ37SP-E | PAC-SJ41TM-E | PAC-SH65OF-E | PAC-SF28OF-E | PAC-SJ65AS-E | PAC-SH94DM-E | PAC-SH75DM-E | PAC-SJ92DM-E | PAC-SJ93DM-E | PAC-SJ94DM-E | PAC-KE07DM-E | PAC-SF81KC-E | PAC-SF82KC-E | MAC-334IF-E |
| S SERIES | 4-way cassette | SLZ-M15FA | | | | | | | | | | ● | | | | | | | | | | | | | | | ● |
| | | SLZ-M25FA | | | | | | | | | | ● | | | | | | | | | | | | | | | ● |
| | | SLZ-M35FA | | | | | | | | | | ● | | | | | | | | | | | | | | | ● |
| | | SLZ-M50FA | | | | | | | | | | ● | | | | | | | | | | | | | | | ● |
| | | SLZ-M60FA | | | | | | | | | | ● | | | | | | | | | | | | | | | ● |
| | Ceiling - conceald | SEZ-M25DA(L) | | | | | | | | | | | | | | | | | | | | | | ● | | | ● |
| | | SEZ-M35DA(L) | | | | | | | | | | | | | | | | | | | | | | ● | | | ● |
| | | SEZ-M50DA(L) | | | | | | | | | | | | | | | | | | | | | | ● | | | ● |
| | | SEZ-M60DA(L) | | | | | | | | | | | | | | | | | | | | | | ● | | | ● |
| | | SEZ-M71DA(L) | | | | | | | | | | | | | | | | | | | | | | ● | | | ● |
| P SERIES | 4-way Cassette | PLA-ZM35EA | | ● | | | | | | | | | ● | ● | ● | ● | | ● | | | | | | | | | ●*1 |
| | | PLA-ZM50EA | | ● | | | | | | | | | ● | ● | ● | ● | | ● | | | | | | | | | ●*1 |
| | | PLA-ZM60EA | | ● | | | | | | | | | ● | ● | ● | ● | | ● | | | | | | | | | ●*1 |
| | | PLA-ZM71EA | | ● | | | | | | | | | ● | ● | ● | ● | | ● | | | | | | | | | ●*1 |
| | | PLA-ZM100EA | | ● | | | | | | | | | ● | ● | ● | ● | | ● | | | | | | | | | ●*1 |
| | | PLA-ZM125EA | | ● | | | | | | | | | ● | ● | ● | ● | | ● | | | | | | | | | ●*1 |
| | | PLA-ZM140EA | | ● | | | | | | | | | ● | ● | ● | ● | | ● | | | | | | | | | ●*1 |
| | | PLA-M35EA | | ● | | | | | | | | | ● | ● | ● | ● | | ● | | | | | | | | | ●*1 |
| | | PLA-M50EA | | ● | | | | | | | | | ● | ● | ● | ● | | ● | | | | | | | | | ●*1 |
| | | PLA-M60EA | | ● | | | | | | | | | ● | ● | ● | ● | | ● | | | | | | | | | ●*1 |
| | | PLA-M71EA | | ● | | | | | | | | | ● | ● | ● | ● | | ● | | | | | | | | | ●*1 |
| | | PLA-M100EA | | ● | | | | | | | | | ● | ● | ● | ● | | ● | | | | | | | | | ●*1 |
| | | PLA-M125EA | | ● | | | | | | | | | ● | ● | ● | ● | | ● | | | | | | | | | ● |
| | | PLA-M140EA | | ● | | | | | | | | | ● | ● | ● | ● | | ● | | | | | | | | | ● |
| | Ceiling - conceald | PEAD-M35JA(L) | | | | | | ● | | | | | | | | | | | | | | | | | | | ●*1 |
| | | PEAD-M50JA(L) | | | | | | ● | | | | | | | | | | | | | | | | | | | ●*1 |
| | | PEAD-M60JA(L) | | | | | | | ● | | | | | | | | | | | | | | | | | | ●*1 |
| | | PEAD-M71JA(L) | | | | | | | ● | | | | | | | | | | | | | | | | | | ●*1 |
| | | PEAD-M100JA(L) | | | | | | | | ● | | | | | | | | | | | | | | | | | ●*1 |
| | | PEAD-M125JA(L) | | | | | | | | ● | | | | | | | | | | | | | | | | | ●*1 |
| | | PEAD-M140JA(L) | | | | | | | | | ● | | | | | | | | | | | | | | | | ●*1 |
| | | PEA-RP200WKA | | | | | | | | | | | | | | | | | | | | | | | | | ●*1 |
| | | PEA-RP250WKA | | | | | | | | | | | | | | | | | | | | | | | | | ●*1 |
| | Wall - mounted | PKA-M35HA(L) | | | | | | | | | | | | | | | | | | ● | | | | | | | ●*1 |
| | | PKA-M50HA(L) | | | | | | | | | | | | | | | | | | ● | | | | | | | ●*1 |
| | | PKA-M60KA(L) | | | | | | | | | | | | | | | | | ● | | | | | | | | ●*1 |
| | | PKA-M71KA(L) | | | | | | | | | | | | | | | | | ● | | | | | | | | ●*1 |
| | | PKA-M100KA(L) | | | | | | | | | | | | | | | | | ● | | | | | | | | ●*1 |
| | Ceiling - suspended | PCA-M35KA | | | ● | | | | | | | | | | | | | | | | ● | | | | | | ●*1 |
| | | PCA-M50KA | | | ● | | | | | | | | | | | | | | | | ● | | | | | | ●*1 |
| | | PCA-M60KA | | | | ● | | | | | | | | | | | | | | | | | ● | | | | ●*1 |
| | | PCA-M71KA | | | | ● | | | | | | | | | | | | | | | | ● | | | | | ●*1 |
| | | PCA-M100KA | | | | | ● | | | | | | | | | | | | | | | ● | | | | | |
| | | PCA-M125KA | | | | | ● | | | | | | | | | | | | | | | ● | | | | | |
| | | PCA-M140KA | | | | | ● | | | | | | | | | | | | | | | ● | | | | | |
| | | PCA-M71HA | ● | | | | | | | | | | | | | | ● | | | | | | | | ● | | |
| | Floor - standing | PSA-RP71KA | | | | | | | | | | | | | | | | | | | | | | | | | |
| | | PSA-RP100KA | | | | | | | | | | | | | | | | | | | | | | | | | |
| | | PSA-RP125KA | | | | | | | | | | | | | | | | | | | | | | | | | |
| | | PSA-RP140KA | | | | | | | | | | | | | | | | | | | | | | | | | |

*1 P Series indoor units can be used in combination with SUZ or MXZ outdoor units.
*2 Unable to use with wireless remote controller.
*3 PAC-SH29TC-E is required.
*4 Group control cannot be used.

| | MA & Contact Terminal Interface | Wi-Fi Interface | Power Supply Terminal Kit | | | | Wired Remote Controller | | | | Wireless Remote Controller | | | | | | Remote Sensor | Remote On/Off Adapter | Remote Operation Adapter | Connector Cable for Remote Display |
|---|---|---|---|---|---|---|---|---|---|---|---|---|---|---|---|---|---|---|---|---|
| | | | | | | | Controller | | | Terminal Block kit for PKA | Signal Sender | | Signal Receiver | | | Controller Kit (Sender & Receiver) | | | | |
| | MAC-397IF-E | MAC-567IF-E | PAC-SG94HR-E | PAC-SG96HR-E | PAC-SG97HR-E | PAC-SJ39HR-E | PAR-40MAA | PAR-CT01MAA | PAC-YT52CRA | PAC-SH29TC-E | PAR-SL97A-E | PAR-SL100A-E | PAR-SA9CA-E | PAR-SF9FA | PAR-SE9FA-E | PAR-SL94B-E | PAC-SE41TS-E | PAC-SE55RA-E | PAC-SF40RM-E | PAC-SA88HA-E |
| | ● | ● | | | | | ● | ● | ● | | ● | ●*4 | | ● | | | ● | ● | ●*2 | ● |
| | ● | ● | | | | | ● | ● | ● | | ● | ●*4 | | ● | | | ● | ● | ●*2 | ● |
| | ● | ● | | | | | ● | ● | ● | | ● | ●*4 | | ● | | | ● | ● | ●*2 | ● |
| | ● | ● | | | | | ● | ● | ● | | ● | ●*4 | | ● | | | ● | ● | ●*2 | ● |
| | ● | ● | | | | | ● | ● | ● | | ● | ●*4 | | ● | | | ● | ● | ●*2 | ● |
| | ● | ● | | | | | DA | DA | DA | | ● | | ● | | | | ● | ● | ●*2 | ● |
| | ● | ● | | | | | DA | DA | DA | | ● | | ● | | | | ● | ● | ●*2 | ● |
| | ● | ● | | | | | DA | DA | DA | | ● | | ● | | | | ● | ● | ●*2 | ● |
| | ● | ● | | | | | DA | DA | DA | | ● | | ● | | | | ● | ● | ●*2 | ● |
| | ● | ● | | | | | DA | DA | DA | | ● | | ● | | | | ● | ● | ●*2 | ● |
| | ●*1 | ● | | | | ● | ● | ● | ● | | ● | ●*4 | | | ● | | ● | ● | ●*2 | ● |
| | ●*1 | ● | | | | ● | ● | ● | ● | | ● | ●*4 | | | ● | | ● | ● | ●*2 | ● |
| | ●*1 | ● | | | | ● | ● | ● | ● | | ● | ●*4 | | | ● | | ● | ● | ●*2 | ● |
| | ●*1 | ● | | | | ● | ● | ● | ● | | ● | ●*4 | | | ● | | ● | ● | ●*2 | ● |
| | ●*1 | ● | | | | ● | ● | ● | ● | | ● | ●*4 | | | ● | | ● | ● | ●*2 | ● |
| | ●*1 | ● | | | | ● | ● | ● | ● | | ● | ●*4 | | | ● | | ● | ● | ●*2 | ● |
| | ●*1 | ● | | | | ● | ● | ● | ● | | ● | ●*4 | | | ● | | ● | ● | ●*2 | ● |
| | ●*1 | ● | | | | ● | ● | ● | ● | | ● | ●*4 | | | ● | | ● | ● | ●*2 | ● |
| | ●*1 | ● | | | | ● | ● | ● | ● | | ● | ●*4 | | | ● | | ● | ● | ●*2 | ● |
| | ●*1 | ● | | | | ● | ● | ● | ● | | ● | ●*4 | | | ● | | ● | ● | ●*2 | ● |
| | ●*1 | ● | | | | ● | ● | ● | ● | | ● | ●*4 | | | ● | | ● | ● | ●*2 | ● |
| | ●*1 | ● | | | | ● | ● | ● | ● | | ● | ●*4 | | | ● | | ● | ● | ●*2 | ● |
| | ●*1 | ● | | | ● | | ● | ● | ● | | ● | | ● | | | | ● | ● | ●*2 | ● |
| | ●*1 | ● | | | ● | | ● | ● | ● | | ● | | ● | | | | ● | ● | ●*2 | ● |
| | ●*1 | ● | | | ● | | ● | ● | ● | | ● | | ● | | | | ● | ● | ●*2 | ● |
| | ●*1 | ● | | | ● | | ● | ● | ● | | ● | | ● | | | | ● | ● | ●*2 | ● |
| | ●*1 | ● | | | ● | | ● | ● | ● | | ● | | ● | | | | ● | ● | ●*2 | ● |
| | ●*1 | ● | | | ● | | ● | ● | ● | | ● | | ● | | | | ● | ● | ●*2 | ● |
| | ●*1 | ● | | | ● | | ● | ● | ● | | ● | | ● | | | | ● | ● | ●*2 | ● |
| | ●*1 | ● | | | ● | | ● | ● | ● | | | | | | | | ● | ● | ●*2 | ● |
| | ●*1 | ● | ● | | | | ●*3 | ●*3 | ●*3 | ● | ● | | | | | | ● | ● | | ● |
| | ●*1 | ● | ● | | | | ●*3 | ●*3 | ●*3 | ● | ● | | | | | | ● | ● | | ● |
| | ●*1 | ● | ● | | | | ●*3 | ●*3 | ●*3 | ● | ● | | | | | | ● | ● | | ● |
| | ●*1 | ● | ● | | | | ●*3 | ●*3 | ●*3 | ● | ● | | | | | | ● | ● | | ● |
| | ●*1 | ● | ● | | | | ●*3 | ●*3 | ●*3 | ● | ● | | | | | | ● | ● | | ● |
| | ●*1 | ● | | ● | | | ● | ● | ● | | ● | | | | | ● | ● | ● | ●*2 | ● |
| | ●*1 | ● | | ● | | | ● | ● | ● | | ● | | | | | ● | ● | ● | ●*2 | ● |
| | ●*1 | ● | | ● | | | ● | ● | ● | | ● | | | | | ● | ● | ● | ●*2 | ● |
| | ●*1 | ● | | ● | | | ● | ● | ● | | ● | | | | | ● | ● | ● | ●*2 | ● |
| | | ● | | ● | | | ● | ● | ● | | ● | | | | | ● | ● | ● | ●*2 | ● |
| | | ● | | ● | | | ● | ● | ● | | ● | | | | | ● | ● | ● | ●*2 | ● |
| | | ● | | ● | | | ● | ● | ● | | ● | | | | | ● | ● | ● | ●*2 | ● |
| | | | | | ● | | ● | ● | ● | | ● | | | | | | ● | ● | ●*2 | ● |
| | | ● | | ● | | | | | | | | | | | | | ● | ● | ●*2 | ● |
| | | ● | | ● | | | | | | | | | | | | | ● | ● | ●*2 | ● |
| | | ● | | ● | | | | | | | | | | | | | ● | ● | ●*2 | ● |
| | | ● | | ● | | | | | | | | | | | | | ● | ● | ●*2 | ● |

# Optional Parts List <Outdoor>

| Outdoor Unit | | Option | Distribution Pipe | | | | | | Joint Pipe | | | | | | | | Liquid Refrigerant Dryer | | |
|---|---|---|---|---|---|---|---|---|---|---|---|---|---|---|---|---|---|---|---|
| | | | For Twin (50:50) | | For Triple (33:33:33) | | For Quadruple (25:25:25:25) | | Unit ø6.35 --> Pipe ø9.52 | Unit ø9.52 --> Pipe ø12.7 | Unit ø15.88 --> Pipe ø19.05 | Unit ø9.52 --> Pipe ø15.88 | Unit ø6.35 --> Pipe ø9.52 | Unit ø9.52 --> Pipe ø12.7 | Unit ø12.7 --> Pipe ø9.52 | Unit ø12.7 --> Pipe ø15.88 | For pipe ø6.35 | For pipe ø9.52 | For pipe ø12.7 |
| | | | | | | | | | | | | | | Flare | | | | | |
| | | | MSDD-50TR-E | MSDD-50WR-E | MSDT-111R-E | MSDT-111R3-E | MSDF-1111R-E | MSDF-1111R2-E | PAC-SG72RJ-E | PAC-SG73RJ-E | PAC-SG75RJ-E | PAC-SG76RJ-E | PAC-493PI | MAC-A454JP-E | MAC-A455JP-E | MAC-A456JP-E | PAC-SG81DR-E | PAC-SG82DR-E | PAC-SG85DR-E |
| M SERIES | L Series | MUZ-LN25VG | | | | | | | | | | | | | | | | | |
| | | MUZ-LN25VGHZ | | | | | | | | | | | | | | | | | |
| | | MUZ-LN35VG | | | | | | | | | | | | | | | | | |
| | | MUZ-LN35VGHZ | | | | | | | | | | | | | | | | | |
| | | MUZ-LN50VG | | | | | | | | | | | | | | | | | |
| | | MUZ-LN50VGHZ | | | | | | | | | | | | | | | | | |
| | | MUZ-LN60VG | | | | | | | | | | | | | | | | | |
| | A Series | MUZ-AP20VG | | | | | | | | | | | | | | | | | |
| | | MUZ-AP25VG | | | | | | | | | | | | | | | | | |
| | | MUZ-AP25VGH | | | | | | | | | | | | | | | | | |
| | | MUZ-AP35VG | | | | | | | | | | | | | | | | | |
| | | MUZ-AP35VGH | | | | | | | | | | | | | | | | | |
| | | MUZ-AP42VG | | | | | | | | | | | | | | | | | |
| | | MUZ-AP42VGH | | | | | | | | | | | | | | | | | |
| | | MUZ-AP50VG | | | | | | | | | | | | | | | | | |
| | | MUZ-AP50VGH | | | | | | | | | | | | | | | | | |
| | | MUZ-AP60VG | | | | | | | | | | | | | | | | | |
| | | MUZ-AP71VG | | | | | | | | | | | | | | | | | |
| | F Series | MUZ-FH25VE | | | | | | | | | | | | | | | | | |
| | | MUZ-FH25VEHZ | | | | | | | | | | | | | | | | | |
| | | MUZ-FH35VE | | | | | | | | | | | | | | | | | |
| | | MUZ-FH35VEHZ | | | | | | | | | | | | | | | | | |
| | | MUZ-FH50VE | | | | | | | | | | | | | | | | | |
| | | MUZ-FH50VEHZ | | | | | | | | | | | | | | | | | |
| | E Series | MUZ-EF25VE | | | | | | | | | | | | | | | | | |
| | | MUZ-EF25VEH | | | | | | | | | | | | | | | | | |
| | | MUZ-EF35VE | | | | | | | | | | | | | | | | | |
| | | MUZ-EF35VEH | | | | | | | | | | | | | | | | | |
| | | MUZ-EF42VE | | | | | | | | | | | | | | | | | |
| | | MUZ-EF50VE | | | | | | | | | | | | | | | | | |
| | S Series | MUZ-SF25VE | | | | | | | | | | | | | | | | | |
| | | MUZ-SF25VEH | | | | | | | | | | | | | | | | | |
| | | MUZ-SF35VE | | | | | | | | | | | | | | | | | |
| | | MUZ-SF35VEH | | | | | | | | | | | | | | | | | |
| | | MUZ-SF42VE | | | | | | | | | | | | | | | | | |
| | | MUZ-SF42VEH | | | | | | | | | | | | | | | | | |
| | | MUZ-SF50VE | | | | | | | | | | | | | | | | | |
| | | MUZ-SF50VEH | | | | | | | | | | | | | | | | | |
| | G Series | MUZ-GF60VE | | | | | | | | | | | | | | | | | |
| | | MUZ-GF71VE | | | | | | | | | | | | | | | | | |
| | BT Series | MUZ-BT20VG | | | | | | | | | | | | | | | | | |
| | | MUZ-BT25VG | | | | | | | | | | | | | | | | | |
| | | MUZ-BT35VG | | | | | | | | | | | | | | | | | |
| | | MUZ-BT50VG | | | | | | | | | | | | | | | | | |
| | W Series | MUZ-WN25VA | | | | | | | | | | | | | | | | | |
| | | MUZ-WN35VA | | | | | | | | | | | | | | | | | |
| | TP Series | MUY-TP35VF | | | | | | | | | | | | | | | | | |
| | | MUY-TP50VF | | | | | | | | | | | | | | | | | |
| | D Series | MUZ-DM25VA | | | | | | | | | | | | | | | | | |
| | | MUZ-DM35VA | | | | | | | | | | | | | | | | | |
| | H Series | MUZ-HJ25VA | | | | | | | | | | | | | | | | | |
| | | MUZ-HJ35VA | | | | | | | | | | | | | | | | | |
| | | MUZ-HJ50VA | | | | | | | | | | | | | | | | | |
| | | MUZ-HJ60VA | | | | | | | | | | | | | | | | | |
| | | MUZ-HJ71VA | | | | | | | | | | | | | | | | | |
| | HR Series | MUZ-HR25VF | | | | | | | | | | | | | | | | | |
| | | MUZ-HR35VF | | | | | | | | | | | | | | | | | |
| | | MUZ-HR42VF | | | | | | | | | | | | | | | | | |
| | | MUZ-HR50VF | | | | | | | | | | | | | | | | | |
| | | MUZ-HR60VF | | | | | | | | | | | | | | | | | |
| | | MUZ-HR71VF | | | | | | | | | | | | | | | | | |
| | Compact floor | MUFZ-KJ25VE | | | | | | | | | | | | | | | | | |
| | | MUFZ-KJ25VEHZ | | | | | | | | | | | | | | | | | |
| | | MUFZ-KJ35VE | | | | | | | | | | | | | | | | | |
| | | MUFZ-KJ35VEHZ | | | | | | | | | | | | | | | | | |
| | | MUFZ-KJ50VE | | | | | | | | | | | | | | | | | |
| | | MUFZ-KJ50VEHZ | | | | | | | | | | | | | | | | | |
| S SERIES (R32) | | SUZ-M25VA | | | | | | | | | | | | | | | | | |
| | | SUZ-M35VA | | | | | | | | | | | | | ● | | | | |
| | | SUZ-M50VA | | | | | | | | | | | | | | | | | |
| | | SUZ-M60VA | | | | | | | | | | | | | | | | | |
| | | SUZ-M71VA | | | | | | | | | | | | | | | | | |
| S SERIES (R410A) | | SUZ-KA25VA6 | | | | | | | | | | | | | | | | | |
| | | SUZ-KA35VA6 | | | | | | | | | | | | | ● | | | | |
| | | SUZ-KA50VA6 | | | | | | | | | | | | | | | | | |
| | | SUZ-KA60VA6 | | | | | | | | | | | | | | | | | |
| | | SUZ-KA71VA6 | | | | | | | | | | | | | | | | | |

| Air Outlet Guide | | | | | | | | | Air Protection Guide | | | Drain Socket | | | Freeze-prevention Heater (for Drain Pan) | | | Centralized Drain Pan | | | M-NET Adapter | M-NET Converter | | Control/ Service Tool | Step Interface 1 PC board w/attach-ment kit | Insulation for Accumlator | | High Static Fan Motor |
|---|---|---|---|---|---|---|---|---|---|---|---|---|---|---|---|---|---|---|---|---|---|---|---|---|---|---|---|---|
| MAC-889SG | MAC-881SG | MAC-882SG | MAC-856SG | MAC-886SG-E | MAC-883SG | PAC-SJ07SG-E | PAC-SG59SG-E | PAC-SH96SG-E | PAC-SJ06AG-E | PAC-SH63AG-E | PAC-SH95AG-E | PAC-SJ08DS-E | PAC-SG60DS-E | PAC-SG61DS-E | MAC-643BH-E | MAC-644BH-E | MAC-646BH-E | PAC-SG63DP-E | PAC-SG64DP-E | PAC-SH97DP-E | PAC-IF01MNT-E | PAC-SJ96MA-E | PAC-SJ95MA-E | PAC-SK52ST | PAC-IF012B-E | MAC-892INS-E | MAC-893INS-E | PAC-SJ71FM-E |
| ● | ● | | | | | | | | | | | | | | | | | | | | | | | | | | | |
| ● | ● | | | | | | | | | | | | | | | | | | | | | | | | | | | |
| ● | ● | | | | | | | | | | | | | | | | | | | | | | | | | | | |
| ● | ● | | | | | | | | | | | | | | | | | | | | | | | | | | | |
| | | ● | | | | | | | | | | | | | | | | | | | | | | | | | | |
| | | | | ● | | | | | | | | | | | | | | | | | | | | | | | | |
| | | | | ● | | | | | | | | | | | | | | | | | | | | | | | | |
| | | | | | | | | | | | | | | | | | | | | | | | | | | | | |
| ● | ● | | | | | | | | | | | | | | | | | | | | | | | | | | | |
| ● | ● | | | | | | | | | | | | | | | | | | | | | | | | | | | |
| ● | ● | | | | | | | | | | | | | | | | | | | | | | | | | | | |
| ● | ● | | | | | | | | | | | | | | | | | | | | | | | | | | | |
| ● | ● | | | | | | | | | | | | | | | | | | | | | | | | | | | |
| ● | ● | | | | | | | | | | | | | | | | | | | | | | | | | | | |
| | | | | ● | | | | | | | | | | | | | | | | | | | | | | | | |
| | | | | ● | | | | | | | | | | | | | | | | | | | | | | | | |
| | | | | | | | | | | | | | | | | | | | | | | | | | | | | |
| | | | | | | | | | | | | | | | | | | | | | | | | | | | | |
| ● | ● | | | | | | | | | | | | | | | | | | | | | | | | | | | |
| ● | ● | | | | | | | | | | | | | | | | | | | | | | | | | | | |
| ● | ● | | | | | | | | | | | | | | | | | | | | | | | | | | | |
| ● | ● | | | | | | | | | | | | | | | | | | | | | | | | | | | |
| | | | | ● | | | | | | | | | | | | | | | | | | | | | | | | |
| | | | | ● | | | | | | | | | | | | | | | | | | | | | | | | |
| ● | ● | | | | | | | | | | | | | | | | | | | | | | | | | | | |
| ● | ● | | | | | | | | | | | | | | | | | | | | | | | | | | | |
| ● | ● | | | | | | | | | | | | | | | | | | | | | | | | | | | |
| ● | ● | | | | | | | | | | | | | | | | | | | | | | | | | | | |
| ● | ● | | | | | | | | | | | | | | ● | | | | | | | | | | | | | |
| | | ● | | | | | | | | | | | | | | | ● | | | | | | | | | | | |
| ● | ● | | | | | | | | | | | | | | | | | | | | | | | | | | | |
| ● | ● | | | | | | | | | | | | | | | | | | | | | | | | | | | |
| ● | ● | | | | | | | | | | | | | | | | | | | | | | | | | | | |
| ● | ● | | | | | | | | | | | | | | | | | | | | | | | | | | | |
| ● | ● | | | | | | | | | | | | | | | | | | | | | | | | | | | |
| ● | ● | | | | | | | | | | | | | | | | | | | | | | | | | | | |
| | | | | ● | | | | | | | | | | | | | | | | | | | | | | | | |
| | | | | ● | | | | | | | | | | | | | | | | | | | | | | | | |
| | | | | ● | | | | | | | | | | | | | | | | | | | | | | | | |
| | | | | ● | | | | | | | | | | | | | | | | | | | | | | | | |
| | | | | | | | | | | | | | | | | | | | | | | | | | | | | |
| | | | | | | | | | | | | | | | | | | | | | | | | | | | | |
| | | | | | | | | | | | | | | | | | | | | | | | | | | | | |
| | | | | | | | | | | | | | | | | | | | | | | | | | | | | |
| | | | | | ● | | | | | | | | | | | | | | | | | | | | | | | |
| | | | | | ● | | | | | | | | | | | | | | | | | | | | | | | |
| ● | ● | | | | | | | | | | | | | | | | | | | | | | | | | | | |
| ● | ● | | | | | | | | | | | | | | | | | | | | | | | | | | | |
| | | | | | ● | | | | | | | | | | | | | | | | | | | | | | | |
| | | | | | ● | | | | | | | | | | | | | | | | | | | | | | | |
| | | | | | ● | | | | | | | | | | | | | | | | | | | | | | | |
| | | | | | ● | | | | | | | | | | | | | | | | | | | | | | | |
| ● | ● | | | | | | | | | | | | | | | | | | | | | | | | | | | |
| | | | | ● | | | | | | | | | | | | | | | | | | | | | | | | |
| | | | | ● | | | | | | | | | | | | | | | | | | | | | | | | |
| | | | | | ● | | | | | | | | | | | | | | | | | | | | | | | |
| | | | | | ● | | | | | | | | | | | | | | | | | | | | | | | |
| ● | ● | | | | | | | | | | | | | | | | | | | | | | | | | | | |
| ● | ● | | | | | | | | | | | | | | | | | | | | | | | | | | | |
| | | | | | | | | | | | | | | | | | | | | | | | | | | | | |
| | | | | | | | | | | | | | | | | | | | | | | | | | | | | |
| ● | ● | | | | | | | | | | | | | | | | | | | | | | | | | | | |
| ● | ● | | | | | | | | | | | | | | | | | | | | | | | | | | | |
| ● | ● | | | | | | | | | | | | | | | | | | | | | | | | | | | |
| ● | ● | | | | | | | | | | | | | | | | | | | | | | | | | | | |
| | | | | ● | | | | | | | | | | | | | | | | | | | | | | | | |
| | | | | ● | | | | | | | | | | | | | | | | | | | | | | | | |
| ● | ● | | | | | | | | | | | | | | | | | | | | | | | | | | | |
| ● | ● | | | | | | | | | | | | | | | | | | | | | | | | | | | |
| | | | | ● | | | | | | | | | | | | | | | | | | | | | | | | |
| | | | | ● | | | | | | | | | | | | | | | | | | | | | | | | |
| | | | | ● | | | | | | | | | | | | | | | | | | | | | | | | |
| ● | ● | | | | | | | | | | | | | | ● | | | | | | | | | | | | | |
| ● | ● | | | | | | | | | | | | | | ● | | | | | | | | | | | | | |
| | | | | ● | | | | | | | | | | | | ● | | | | | | | | | | | | |
| | | | | ● | | | | | | | | | | | | | | | | | | | | | | | | |
| | | | | ● | | | | | | | | | | | | | | | | | | | | | | | | |

# Optional Parts List <Outdoor>

| Outdoor Unit \ Option | | | Distribution Pipe | | | | | | | | Branch Pipe/Header (Joint) | | | | | Joint Pipe | | | | | | | | | | Liquid Refrigerant Dryer | | |
|---|---|---|---|---|---|---|---|---|---|---|---|---|---|---|---|---|---|---|---|---|---|---|---|---|---|---|---|---|
| | | | For Twin (50:50) | | | | For Triple (33:33:33) | | For Quadruple (25:25:25:25) | | In case of using 2-branch boxes | | Branch Pipe | Header | | Unit ø6.35 --> Pipe ø9.52 | | Unit ø9.52 --> Pipe ø12.7 | | Unit ø15.88 --> Pipe ø19.05 | Unit ø9.52 --> Pipe ø15.88 | Unit ø6.35 --> Pipe ø9.52 | Unit ø9.52 --> Pipe ø12.7 | Unit ø12.7 --> Pipe ø9.52 | Unit ø12.7 --> Pipe ø15.88 | For pipe ø6.35 | For pipe ø9.52 | For pipe ø12.7 |
| | | | | | | | | | | | Flare | Brazing | | | | | | | | | Flare | | | | | | | |
| | | | MSDD-50TR-E | MSDD-50TR2-E | MSDD-50WR-E | MSDD-50WR2-E | MSDT-111R-E | MSDT-111R3-E | MSDF-1111R-E | MSDF-1111R2-E | MSDD-50AR-E | MSDD-50BR-E | CMY-Y62-G-E | CMY-Y64-G-E | CMY-Y68-G-E | PAC-SG72RJ-E | PAC-SG87RJ-E | PAC-SG73RJ-E | PAC-SG88RJ-E | PAC-SG75RJ-E | PAC-SG76RJ-E | PAC-493PI | PAC-A454JP-E | PAC-A455JP-E | PAC-A456JP-E | PAC-SG81DR-E | PAC-SG82DR-E | PAC-SG85DR-E |
| P SERIES | Power Inverter (R32) | PUZ-ZM35VKA | | | | | | | | | | | | | | | ● | | | | | | | | | ● | | |
| | | PUZ-ZM50VKA | | | | | | | | | | | | | | | ● | | | | | | | | | ● | | |
| | | PUZ-ZM60VHA | | | | | | | | | | | | | | | | | ● | | | | | | | | ● | |
| | | PUZ-ZM71VHA | | ● | | | | | | | | | | | | | | | ● | | | | | | | | ● | |
| | | PUZ-ZM100VKA | | ● | | | | ● | | | | | | | | | | | ● | | | | | | | | ● | |
| | | PUZ-ZM100YKA | | ● | | | | ● | | | | | | | | | | | ● | | | | | | | | ● | |
| | | PUZ-ZM125VKA | | ● | | | | ● | | ● | | | | | | | | | ● | | | | | | | | ● | |
| | | PUZ-ZM125YKA | | ● | | | | ● | | ● | | | | | | | | | ● | | | | | | | | ● | |
| | | PUZ-ZM140VKA | | ● | | | | ● | | ● | | | | | | | | | ● | | | | | | | | ● | |
| | | PUZ-ZM140YKA | | ● | | | | ● | | ● | | | | | | | | | ● | | | | | | | | ● | |
| | | PUZ-ZM200YKA | | | | ● | | ● | | ● | | | | | | | | | | | | | | | | | | |
| | | PUZ-ZM250YKA | | | | ● | | ● | | ● | | | | | | | | | | | | | | | | | | |
| | Power Inverter (R410A) | PUHZ-ZRP35VKA2 | | | | | | | | | | | | | | ● | | | | | | | | | | ● | | |
| | | PUHZ-ZRP50VKA2 | | | | | | | | | | | | | | ● | | | | | | | | | | ● | | |
| | | PUHZ-ZRP60VHA2 | | | | | | | | | | | | | | | | ● | | ● | | | | | | | ● | |
| | | PUHZ-ZRP71VHA2 | ● | | | | | | | | | | | | | | | ● | | ● | | | | | | | ● | |
| | | PUHZ-ZRP100VKA3 | ● | | | | ● | | | | | | | | | | | ● | | ● | | | | | | | ● | |
| | | PUHZ-ZRP100YKA3 | ● | | | | ● | | | | | | | | | | | ● | | ● | | | | | | | ● | |
| | | PUHZ-ZRP125VKA3 | ● | | | | ● | | ● | | | | | | | | | ● | | ● | | | | | | | ● | |
| | | PUHZ-ZRP125YKA3 | ● | | | | ● | | ● | | | | | | | | | ● | | ● | | | | | | | ● | |
| | | PUHZ-ZRP140VKA3 | ● | | | | ● | | ● | | | | | | | | | ● | | ● | | | | | | | ● | |
| | | PUHZ-ZRP140YKA3 | ● | | | | ● | | ● | | | | | | | | | ● | | ● | | | | | | | ● | |
| | | PUHZ-ZRP200YKA3 | | | ● | | ● | | ● | | | | | | | | | ● | | | | | | | | | ● | |
| | | PUHZ-ZRP250YKA3 | | | ● | | ● | | ● | | | | | | | | | | | | | | | | | | | ● |
| | Standard Inverter (R32) | PUZ-M100VKA | | ● | | | | | | | | | | | | | | | | | | | | | | | ● | |
| | | PUZ-M125VKA | | ● | | | | | | | | | | | | | | | | | | | | | | | ● | |
| | | PUZ-M140VKA | | ● | | | | ● | | | | | | | | | | | | | | | | | | | ● | |
| | | PUZ-M100YKA | | ● | | | | | | | | | | | | | | | | | | | | | | | ● | |
| | | PUZ-M125YKA | | ● | | | | | | | | | | | | | | | | | | | | | | | ● | |
| | | PUZ-M140YKA | | ● | | | | ● | | | | | | | | | | | | | | | | | | | ● | |
| | | PUZ-M200YKA | | | | ● | | ● | | ● | | | | | | | | | | | | | | | | | ● | |
| | | PUZ-M250YKA | | | | ● | | ● | | ● | | | | | | | | | | | | | | | | | | ● |
| | Standard Inverter (R410A) | PUHZ-P100VKA | ● | | | | | | | | | | | | | | | | | | | | | | | | ● | |
| | | PUHZ-P125VKA | ● | | | | | | | | | | | | | | | | | | | | | | | | ● | |
| | | PUHZ-P140VKA | ● | | | | ● | | | | | | | | | | | | | | | | | | | | ● | |
| | | PUHZ-P100YKA | ● | | | | | | | | | | | | | | | | | | | | | | | | ● | |
| | | PUHZ-P125YKA | ● | | | | | | | | | | | | | | | | | | | | | | | | ● | |
| | | PUHZ-P140YKA | ● | | | | ● | | | | | | | | | | | | | | | | | | | | ● | |
| | | PUHZ-P200YKA3 | | | ● | | ● | | ● | | | | | | | | | | | | | | | | | | ● | |
| | | PUHZ-P250YKA3 | | | ● | | ● | | ● | | | | | | | | | | | | | | | | | | | ● |
| MXZ SERIES (R32) | | MXZ-2F33VF3 | | | | | | | | | | | | | | | | | | | | | | | | | | |
| | | MXZ-2F42VF3 | | | | | | | | | | | | | | | | | | | | | | | | | | |
| | | MXZ-2F53VF(H)3 | | | | | | | | | | | | | | | | | | | | | ● | | | | | |
| | | MXZ-3F54VF3 | | | | | | | | | | | | | | | | | | | | | ● | | | | | |
| | | MXZ-3F68VF3 | | | | | | | | | | | | | | | | | | | ● | ● | ● | | | | | |
| | | MXZ-4F72VF3 | | | | | | | | | | | | | | | | | | | ● | ● | ● | ● | ● | | | |
| | | MXZ-4F80VF3 | | | | | | | | | | | | | | | | | | | ● | ● | ● | ● | ● | | | |
| MXZ SERIES (R410A) | | MXZ-2D33VA | | | | | | | | | | | | | | | | | | | | | | | | | | |
| | | MXZ-2D42VA2 | | | | | | | | | | | | | | | | | | | | | | | | | | |
| | | MXZ-2D53VA(H)2 | | | | | | | | | | | | | | | | | | | | | ● | | | | | |
| | | MXZ-2E53VAHZ | | | | | | | | | | | | | | | | | | | | | ● | | | | | |
| | | MXZ-3E54VA | | | | | | | | | | | | | | | | | | | | | ● | | | | | |
| | | MXZ-3E68VA | | | | | | | | | | | | | | | | | | | ● | ● | ● | | | | | |
| | | MXZ-4E72VA | | | | | | | | | | | | | | | | | | | ● | ● | ● | ● | ● | | | |
| | | MXZ-4E83VA | | | | | | | | | | | | | | | | | | | ● | ● | ● | ● | ● | | | |
| | | MXZ-4E83VAHZ | | | | | | | | | | | | | | | | | | | ● | ● | ● | ● | ● | | | |
| | | MXZ-5E102VA | | | | | | | | | | | | | | | | | | | ● | ● | ● | ● | ● | | | |
| | | MXZ-6D122VA2 | | | | | | | | | | | | | | | | | | | ● | ● | ● | ● | ● | | | |
| | | MXZ-2DM40VA | | | | | | | | | | | | | | | | | | | | | | | | | | |
| | | MXZ-3DM50VA | | | | | | | | | | | | | | | | | | | | | ● | | | | | |
| | | MXZ-2HA40VF | | | | | | | | | | | | | | | | | | | | | | | | | | |
| | | MXZ-2HA50VF | | | | | | | | | | | | | | | | | | | | | | | | | | |
| | | MXZ-3HA50VF | | | | | | | | | | | | | | | | | | | | | | | | | | |
| PUMY Series (R410A) | | PUMY-SP112VKM(-BS) | | | | | | | | | ● | ● | ● | ● | ● | | | | | | | | | | | | | |
| | | PUMY-SP112YKM(-BS) | | | | | | | | | ● | ● | ● | ● | ● | | | | | | | | | | | | | |
| | | PUMY-SP125VKM(-BS) | | | | | | | | | ● | ● | ● | ● | ● | | | | | | | | | | | | | |
| | | PUMY-SP125YKM(-BS) | | | | | | | | | ● | ● | ● | ● | ● | | | | | | | | | | | | | |
| | | PUMY-SP140VKM(-BS) | | | | | | | | | ● | ● | ● | ● | ● | | | | | | | | | | | | | |
| | | PUMY-SP140YKM(-BS) | | | | | | | | | ● | ● | ● | ● | ● | | | | | | | | | | | | | |
| | | PUMY-P112VKM4(-BS) | | | | | | | | | ● | ● | ● | ● | ● | | | ● | | ● | | | | | | | | |
| | | PUMY-P112YKM(E)4(-BS) | | | | | | | | | ● | ● | ● | ● | ● | | | ● | | ● | | | | | | | | |
| | | PUMY-P125VKM4(-BS) | | | | | | | | | ● | ● | ● | ● | ● | | | ● | | ● | | | | | | | | |
| | | PUMY-P125YKM(E)4(-BS) | | | | | | | | | ● | ● | ● | ● | ● | | | ● | | ● | | | | | | | | |
| | | PUMY-P140VKM4(-BS) | | | | | | | | | ● | ● | ● | ● | ● | | | ● | | ● | | | | | | | | |
| | | PUMY-P140YKM(E)4(-BS) | | | | | | | | | ● | ● | ● | ● | ● | | | ● | | ● | | | | | | | | |
| | | PUMY-P200YKM2(-BS) | | | | | | | | | ● | ● | ● | ● | ● | | | ● | | ● | | | | | | | | |
| POWERFUL HEATING | | PUHZ-SHW112VHA | ● | | | | | | | | | | | | | | | | | | | | | | | | ● | |
| | | PUHZ-SHW112YHA | ● | | | | | | | | | | | | | | | | | | | | | | | | ● | |
| | | PUHZ-SHW140YHA | ● | | | | | | | | | | | | | | | | | | | | | | | | ● | |

| | Branch Box Outer Cover | Reactor Box | Different Diameter Joint | | | | | Different Diameter Joint For Brazing Model | | | | |
|---|---|---|---|---|---|---|---|---|---|---|---|---|
| | | | ø9.52-->ø12.7 | ø12.7-->ø9.52 | ø12.7-->ø15.88 | ø6.35-->ø9.52 | ø9.52-->ø15.88 | ø9.52-->ø12.7 | ø12.7-->ø9.52 | ø12.7-->ø15.88 | ø6.35-->ø9.52 | ø9.52-->ø15.88 |
| | PAC-AK350CVR-E | PAC-RB01BC | MAC-A454JP | MAC-A455JP | MAC-A456JP | PAC-493PI | PAC-SG76RJ-E | PAC-SG78RJB-E | PAC-SG79RJB-E | PAC-SG80RJB-E | PAC-SG77RJB-E | PAC-SG76RJB-E |
| PAC-MK33BC (Flare) | ● | ● | ● | ● | ● | ● | ● | | | | | |
| PAC-MK53BC (Flare) | ● | ● | ● | ● | ● | ● | ● | | | | | |
| PAC-MK33BCB (Brazing) | ● | ● | | | | | | ● | ● | ● | ● | ● |
| PAC-MK53BCB (Brazing) | ● | ● | | | | | | ● | ● | ● | ● | ● |

| Air Outlet Guide | | | Air Outlet Guide | | | | | | Air Protection Guide | | | Drain Socket | | | Freeze-prevention Heater (for Drain Pan) | | | | | | Centralized Drain Pan | | | M-NET Adapter | M-NET Converter | | Control/ Service Tool | Step Interface 1 PC board w/attach-ment kit | | Insulation for Accumlator | | Con-nection Kit | High Static Fan Motor |
|---|---|---|---|---|---|---|---|---|---|---|---|---|---|---|---|---|---|---|---|---|---|---|---|---|---|---|---|---|---|---|---|---|---|
| MAC-889SG | MAC-881SG | MAC-882SG | MAC-856SG | MAC-886SG-E | MAC-883SG | PAC-SJ07SG-E | PAC-SG59SG-E | PAC-SH96SG | PAC-SJ06AG-E | PAC-SH63AG-E | PAC-SH95AG-E | PAC-SJ08DS-E | PAC-SG60DS-E | PAC-SG61DS-E | MAC-643BH-E | MAC-644BH-E | PAC-645BH-E | PAC-646BH-E | PAC-SJ10BH-E | PAC-SJ20BH-E | PAC-SG63DP-E | PAC-SG64DP-E | PAC-SH97DP-E | PAC-IF01MNT-E | PAC-SJ96MA-E | PAC-SJ95MA-E | PAC-SK52ST | PAC-IF012B-E | PAC-(S)IF013B-E | MAC-892INS-E | MAC-893INS-E | PAC-LV11M-J | PAC-SJ71FM-E |
|  |  |  |  |  |  | ● |  |  | ● |  |  | ● |  |  |  |  |  |  |  |  | ● |  |  |  | ● |  | ● |  | ● |  |  |  |  |
|  |  |  |  |  |  | ● |  |  | ● |  |  | ● |  |  |  |  |  |  |  |  | ● |  |  |  | ● |  | ● |  | ● |  |  |  |  |
|  |  |  |  |  |  |  | ● |  |  | ● |  |  |  | ● |  |  |  |  |  |  |  | ● |  |  |  | ● | ● |  | ● |  |  |  |  |
|  |  |  |  |  |  |  | ● |  |  | ● |  |  |  | ● |  |  |  |  |  |  |  | ● |  |  |  | ● | ● |  | ● |  |  |  |  |
|  |  |  |  |  |  |  |  | ● |  |  | ● |  |  | ● |  |  |  |  |  |  |  |  | ● |  |  | ● | ● |  | ● |  |  |  | ● |
|  |  |  |  |  |  |  |  | ● |  |  | ● |  |  | ● |  |  |  |  |  |  |  |  | ● |  |  | ● | ● |  | ● |  |  |  | ● |
|  |  |  |  |  |  |  |  | ● |  |  | ● |  |  | ● |  |  |  |  |  |  |  |  | ● |  |  | ● | ● |  | ● |  |  |  | ● |
|  |  |  |  |  |  |  |  | ● |  |  | ● |  |  | ● |  |  |  |  |  |  |  |  | ● |  |  | ● | ● |  | ● |  |  |  | ● |
|  |  |  |  |  |  |  |  | ● |  |  | ● |  |  | ● |  |  |  |  |  |  |  |  | ● |  |  | ● | ● |  | ● |  |  |  | ● |
|  |  |  |  |  |  |  |  | ● |  |  | ● |  |  | ● |  |  |  |  |  |  |  |  | ● |  |  | ● | ● |  | ● |  |  |  | ● |
|  |  |  |  |  |  |  |  |  |  |  |  |  |  |  |  |  |  |  |  |  |  |  |  |  |  |  |  |  |  |  |  |  |  |
|  |  |  |  |  |  |  |  |  |  |  |  |  |  |  |  |  |  |  |  |  |  |  |  |  |  |  |  |  |  |  |  |  |  |
|  |  |  |  |  |  | ● |  |  | ● |  |  | ● |  |  |  |  |  |  |  |  | ● |  |  |  | ● |  | ● | ● | ● |  |  |  |  |
|  |  |  |  |  |  | ● |  |  | ● |  |  | ● |  |  |  |  |  |  |  |  | ● |  |  |  | ● |  | ● | ● | ● |  |  |  |  |
|  |  |  |  |  |  |  | ● |  |  | ● |  |  |  | ● |  |  |  |  |  |  |  | ● |  |  |  | ● | ● | ● | ● |  |  |  |  |
|  |  |  |  |  |  |  | ● |  |  | ● |  |  |  | ● |  |  |  |  |  |  |  | ● |  |  |  | ● | ● | ● | ● |  |  |  |  |
|  |  |  |  |  |  |  |  | ● |  |  | ● |  |  | ● |  |  |  |  |  |  |  |  | ● |  |  | ● | ● | ● | ● |  |  |  | ● |
|  |  |  |  |  |  |  |  | ● |  |  | ● |  |  | ● |  |  |  |  |  |  |  |  | ● |  |  | ● | ● | ● | ● |  |  |  | ● |
|  |  |  |  |  |  |  |  | ● |  |  | ● |  |  | ● |  |  |  |  |  |  |  |  | ● |  |  | ● | ● | ● | ● |  |  |  | ● |
|  |  |  |  |  |  |  |  | ● |  |  | ● |  |  | ● |  |  |  |  |  |  |  |  | ● |  |  | ● | ● | ● | ● |  |  |  | ● |
|  |  |  |  |  |  |  |  | ● |  |  | ● |  |  | ● |  |  |  |  |  |  |  |  | ● |  |  | ● | ● | ● | ● |  |  |  | ● |
|  |  |  |  |  |  |  |  | ● |  |  | ● |  |  | ● |  |  |  |  |  |  |  |  | ● |  |  | ● | ● | ● | ● |  |  |  | ● |
|  |  |  |  |  |  |  |  | ● |  |  | ● |  |  | ● |  |  |  |  |  |  |  |  | ● |  |  | ● | ● | ● | ● |  |  |  |  |
|  |  |  |  |  |  |  |  | ● |  |  | ● |  |  | ● |  |  |  |  |  |  |  |  | ● |  |  | ● | ● | ● | ● |  |  |  |  |
|  |  |  |  |  |  |  |  | ● |  |  | ● |  |  | ● |  |  |  |  |  |  |  |  | ● |  |  | ● | ● |  |  |  |  |  |  |
|  |  |  |  |  |  |  |  | ● |  |  | ● |  |  | ● |  |  |  |  |  |  |  |  | ● |  |  | ● | ● |  |  |  |  |  |  |
|  |  |  |  |  |  |  |  | ● |  |  | ● |  |  | ● |  |  |  |  |  |  |  |  | ● |  |  | ● | ● |  |  |  |  |  |  |
|  |  |  |  |  |  |  |  | ● |  |  | ● |  |  | ● |  |  |  |  |  |  |  |  | ● |  |  | ● | ● |  |  |  |  |  |  |
|  |  |  |  |  |  |  |  | ● |  |  | ● |  |  | ● |  |  |  |  |  |  |  |  | ● |  |  | ● | ● |  |  |  |  |  |  |
|  |  |  |  |  |  |  |  | ● |  |  | ● |  |  | ● |  |  |  |  |  |  |  |  | ● |  |  | ● | ● |  |  |  |  |  |  |
|  |  |  |  |  |  |  |  | ● |  |  | ● |  |  | ● |  |  |  |  |  |  |  |  | ● |  |  | ● | ● | ● | ● |  |  |  |  |
|  |  |  |  |  |  |  |  | ● |  |  | ● |  |  | ● |  |  |  |  |  |  |  |  | ● |  |  | ● | ● | ● | ● |  |  |  |  |
|  |  |  |  |  |  |  |  | ● |  |  | ● |  |  | ● |  |  |  |  |  |  |  |  | ● |  |  | ● | ● |  |  |  |  |  |  |
|  |  |  |  |  |  |  |  | ● |  |  | ● |  |  | ● |  |  |  |  |  |  |  |  | ● |  |  | ● | ● |  |  |  |  |  |  |
|  |  |  |  |  |  |  |  | ● |  |  | ● |  |  | ● |  |  |  |  |  |  |  |  | ● |  |  | ● | ● |  |  |  |  |  |  |
|  |  |  |  |  |  |  |  | ● |  |  | ● |  |  | ● |  |  |  |  |  |  |  |  | ● |  |  | ● | ● |  |  |  |  |  |  |
|  |  |  |  |  |  |  |  | ● |  |  | ● |  |  | ● |  |  |  |  |  |  |  |  | ● |  |  | ● | ● |  |  |  |  |  |  |
|  |  |  |  |  |  |  |  | ● |  |  | ● |  |  | ● |  |  |  |  |  |  |  |  | ● |  |  | ● | ● |  |  |  |  |  |  |
|  |  |  |  |  |  |  |  | ● |  |  | ● |  |  | ● |  |  |  |  |  |  |  |  | ● |  |  | ● | ● | ● | ● |  |  |  |  |
|  |  |  |  |  |  |  |  | ● |  |  | ● |  |  | ● |  |  |  |  |  |  |  |  | ● |  |  | ● | ● | ● | ● |  |  |  |  |
| ● | ● |  |  |  |  |  |  |  |  |  |  |  |  |  | ● |  |  |  |  |  |  |  |  |  |  |  |  |  |  |  |  |  |  |
| ● | ● |  |  |  |  |  |  |  |  |  |  |  |  |  | ● |  |  |  |  |  |  |  |  |  |  |  |  |  |  |  |  |  |  |
| ● | ● |  |  |  |  |  |  |  |  |  |  |  |  |  | ● |  |  |  |  |  |  |  |  |  |  |  |  |  |  |  |  |  |  |
|  |  |  | ● |  |  |  |  |  |  |  |  |  |  |  |  |  |  | ● |  |  |  |  |  |  |  |  |  |  |  |  |  |  |  |
|  |  |  | ● |  |  |  |  |  |  |  |  |  |  |  |  |  |  | ● |  |  |  |  |  |  |  |  |  |  |  |  |  |  |  |
|  |  |  | ● |  |  |  |  |  |  |  |  |  |  |  |  |  |  | ● |  |  |  |  |  |  |  |  |  |  |  |  |  |  |  |
|  |  |  | ● |  |  |  |  |  |  |  |  |  |  |  |  |  |  | ● |  |  |  |  |  |  |  |  |  |  |  |  |  |  |  |
| ● | ● |  |  |  |  |  |  |  |  |  |  |  |  |  | ● |  |  |  |  |  |  |  |  |  |  |  |  |  |  |  |  |  |  |
| ● | ● |  |  |  |  |  |  |  |  |  |  |  |  |  | ● |  |  |  |  |  |  |  |  |  |  |  |  |  |  |  |  |  |  |
| ● | ● |  |  |  |  |  |  |  |  |  |  |  |  |  | ● |  |  |  |  |  |  |  |  |  |  |  |  |  |  |  |  |  |  |
|  |  |  |  |  |  |  |  | ● |  |  |  |  |  |  |  |  |  |  |  |  |  |  |  | ● |  |  |  |  |  | ● |  |  |  |
|  |  |  | ● |  |  |  |  |  |  |  |  |  |  |  |  |  |  | ● |  |  |  |  |  |  |  |  |  |  |  |  |  |  |  |
|  |  |  | ● |  |  |  |  |  |  |  |  |  |  |  |  |  |  | ● |  |  |  |  |  |  |  |  |  |  |  |  |  |  |  |
|  |  |  | ● |  |  |  |  |  |  |  |  |  |  |  |  |  |  | ● |  |  |  |  |  |  |  |  |  |  |  |  |  |  |  |
|  |  |  |  |  |  |  |  | ● |  |  |  |  | ● |  |  |  | ● |  |  |  |  |  |  | ● |  |  |  |  |  |  |  |  |  |
|  |  |  |  |  |  |  |  | ● |  |  |  |  |  |  |  |  |  |  |  |  |  |  |  | ● |  |  |  |  |  |  | ● |  |  |
|  |  |  |  |  |  |  |  | ● |  |  |  |  | ● |  |  |  | ● |  |  |  |  |  |  | ● |  |  |  |  |  |  |  |  |  |
|  |  |  |  |  |  |  |  | ● |  |  |  |  | ● |  |  |  | ● |  |  |  |  |  |  | ● |  |  |  |  |  |  |  |  |  |
| ● | ● |  |  |  |  |  |  |  |  |  |  |  |  |  |  |  |  |  |  |  |  |  |  |  |  |  |  |  |  |  |  |  |  |
|  |  |  | ● |  |  |  |  |  |  |  |  |  |  |  |  |  |  |  |  |  |  |  |  |  |  |  |  |  |  |  |  |  |  |
| ● |  |  |  |  |  |  |  |  |  |  |  |  |  |  |  |  |  |  |  |  |  |  |  |  |  |  |  |  |  |  |  |  |  |
| ● |  |  |  |  |  |  |  |  |  |  |  |  |  |  |  |  |  |  |  |  |  |  |  |  |  |  |  |  |  |  |  |  |  |
|  |  |  | ● |  |  |  |  |  |  |  |  |  |  |  |  |  |  |  |  |  |  |  |  |  |  |  |  |  |  |  |  |  |  |
|  |  |  |  |  |  |  |  | ● |  |  | ● |  |  | ● |  |  |  |  | ● |  |  |  | ● |  |  |  |  |  |  |  |  | ● |  |
|  |  |  |  |  |  |  |  | ● |  |  | ● |  |  | ● |  |  |  |  | ● |  |  |  | ● |  |  |  |  |  |  |  |  | ● |  |
|  |  |  |  |  |  |  |  | ● |  |  | ● |  |  | ● |  |  |  |  | ● |  |  |  | ● |  |  |  |  |  |  |  |  | ● |  |
|  |  |  |  |  |  |  |  | ● |  |  | ● |  |  | ● |  |  |  |  | ● |  |  |  | ● |  |  |  |  |  |  |  |  | ● |  |
|  |  |  |  |  |  |  |  | ● |  |  | ● |  |  | ● |  |  |  |  | ● |  |  |  | ● |  |  |  |  |  |  |  |  | ● |  |
|  |  |  |  |  |  |  |  | ● |  |  | ● |  |  | ● |  |  |  |  | ● |  |  |  | ● |  |  |  |  |  |  |  |  | ● |  |
|  |  |  |  |  |  |  |  | ● |  |  | ● |  |  | ● |  |  |  |  |  | ● |  |  | ● |  |  |  |  |  |  |  |  | ● | ● |
|  |  |  |  |  |  |  |  | ● |  |  | ● |  |  | ● |  |  |  |  |  | ● |  |  | ● |  |  |  |  |  |  |  |  | ● | ● |
|  |  |  |  |  |  |  |  | ● |  |  | ● |  |  | ● |  |  |  |  |  | ● |  |  | ● |  |  |  |  |  |  |  |  | ● | ● |
|  |  |  |  |  |  |  |  | ● |  |  | ● |  |  | ● |  |  |  |  |  | ● |  |  | ● |  |  |  |  |  |  |  |  | ● | ● |
|  |  |  |  |  |  |  |  | ● |  |  | ● |  |  | ● |  |  |  |  |  | ● |  |  | ● |  |  |  |  |  |  |  |  | ● | ● |
|  |  |  |  |  |  |  |  | ● |  |  | ● |  |  | ● |  |  |  |  |  | ● |  |  | ● |  |  |  |  |  |  |  |  | ● | ● |
|  |  |  |  |  |  |  |  | ● |  |  | ● |  |  | ● |  |  |  |  |  | ● |  |  | ● |  |  |  |  |  |  |  |  | ● |  |
|  |  |  |  |  |  |  | ● |  |  | ● |  |  |  |  |  |  |  |  |  |  |  |  |  |  |  | ● | ● | ● | ● |  |  |  |  |
|  |  |  |  |  |  |  | ● |  |  | ● |  |  |  |  |  |  |  |  |  |  |  |  |  |  |  | ● | ● | ● | ● |  |  |  |  |
|  |  |  |  |  |  |  | ● |  |  | ● |  |  |  |  |  |  |  |  |  |  |  |  |  |  |  | ● | ● | ● | ● |  |  |  |  |

# External Dimensions

## M SERIES

Unit : mm

### MSZ-LN25VG2(W)(V)(R)(B) MSZ-LN35VG2(W)(V)(R)(B)
### MSZ-LN50VG2(W)(V)(R)(B) MSZ-LN60VG2(W)(V)(R)(B)

**INDOOR UNIT**

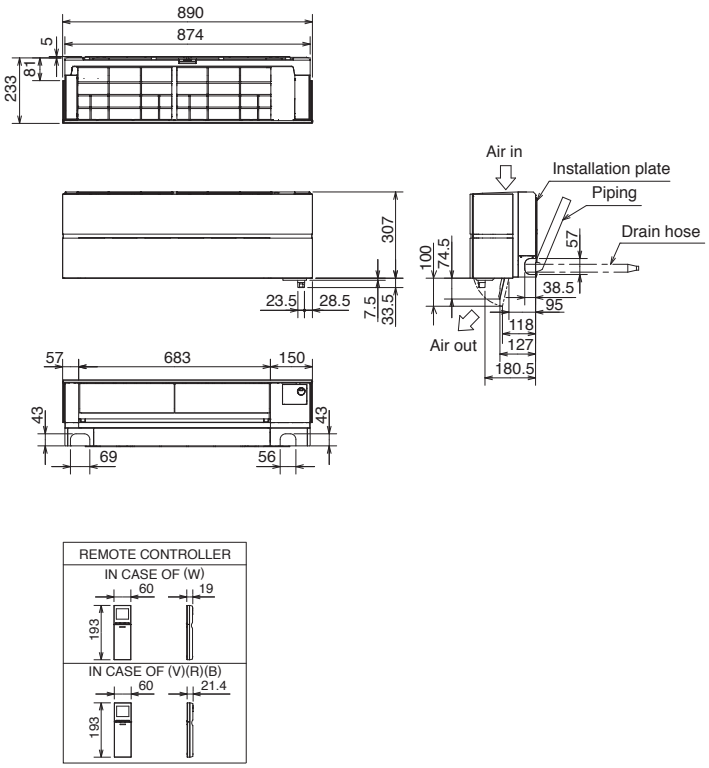


### MSZ-AP15VG MSZ-AP20VG

**INDOOR UNIT**

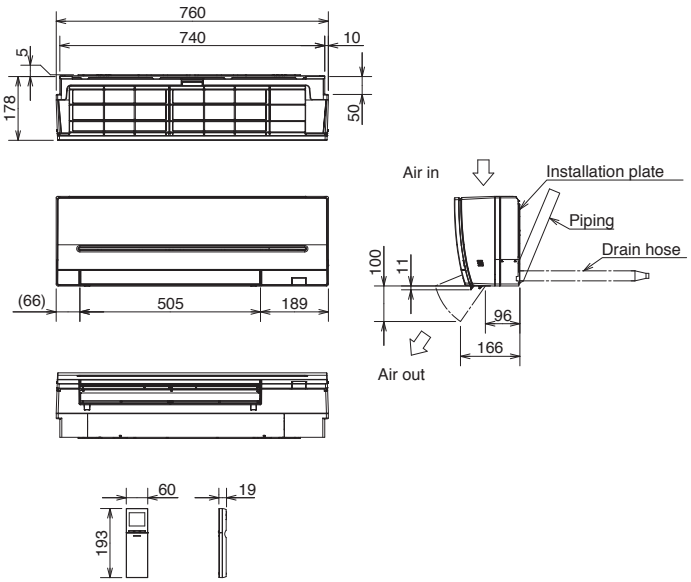


### MSZ-AP25VG MSZ-AP35VG MSZ-AP42VG MSZ-AP50VG
### MSZ-AP25VGK MSZ-AP35VGK MSZ-AP42VGK MSZ-AP50VGK

**INDOOR UNIT**

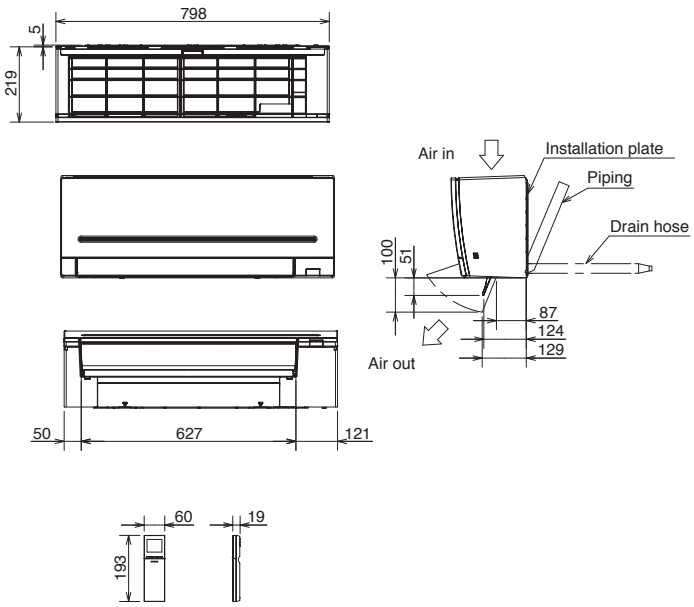


### MSZ-AP60VG MSZ-AP71VG
### MSZ-AP60VGK MSZ-AP71VGK

**INDOOR UNIT**

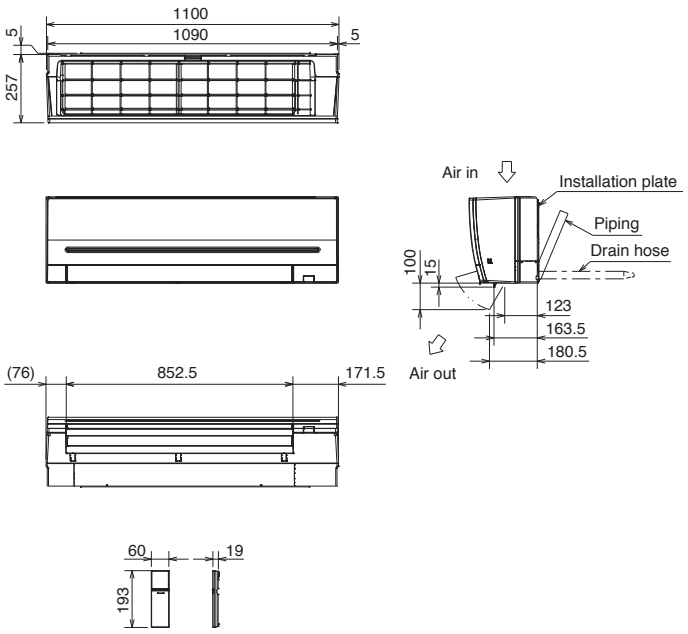

Unit : mm

## MSZ-FH25VE2 MSZ-FH35VE2 MSZ-FH50VE2

**INDOOR UNIT**

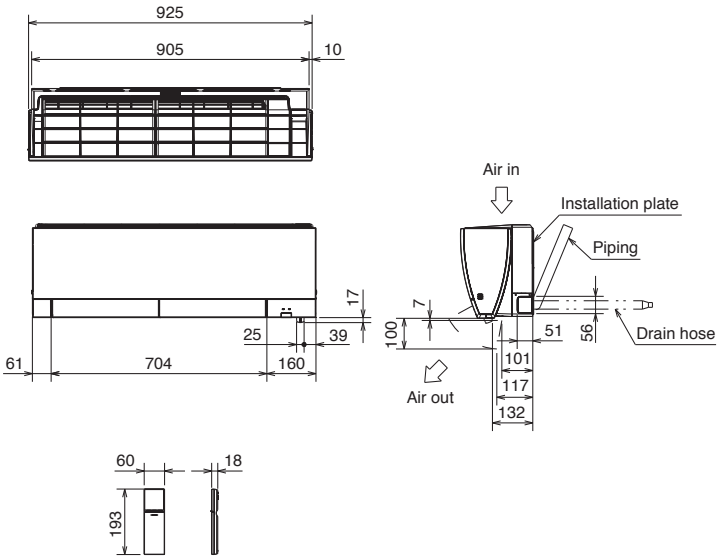


## MSZ-EF18VG(W)(B)(S) MSZ-EF22VG(W)(B)(S)
## MSZ-EF25VG(W)(B)(S) MSZ-EF35VG(W)(B)(S)
## MSZ-EF42VG(W)(B)(S) MSZ-EF50VG(W)(B)(S)
## MSZ-EF18VGK(W)(B)(S) MSZ-EF22VGK(W)(B)(S)
## MSZ-EF25VGK(W)(B)(S) MSZ-EF35VGK(W)(B)(S)
## MSZ-EF42VGK(W)(B)(S) MSZ-EF50VGK(W)(B)(S)

**INDOOR UNIT**

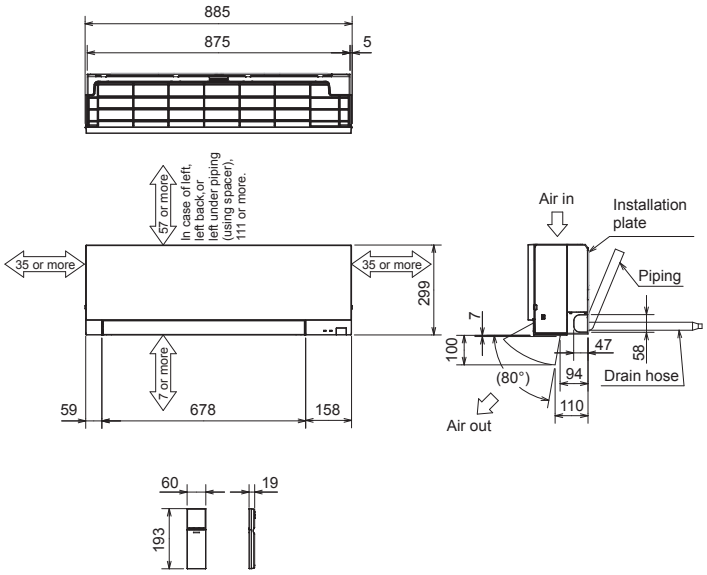


## MSZ-SF25VE3 MSZ-SF35VE3 MSZ-SF42VE3
## MSZ-SF50VE3

**INDOOR UNIT**

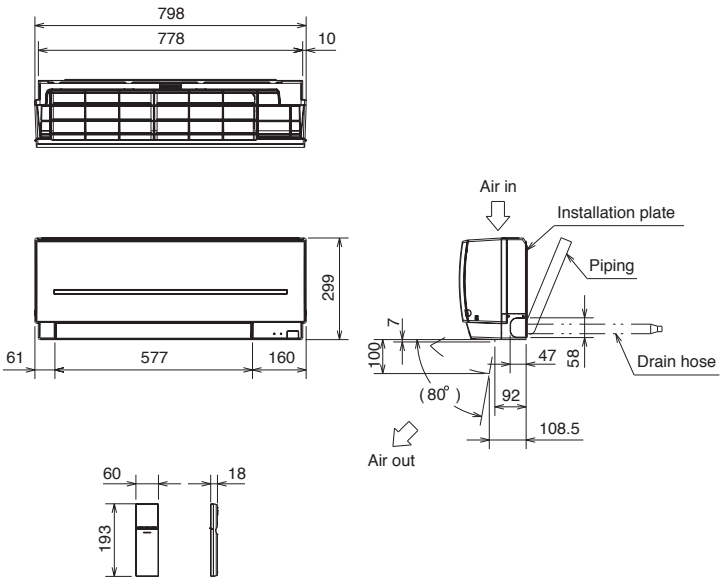


## MSZ-GF60VE2 MSZ-GF71VE2

**INDOOR UNIT**

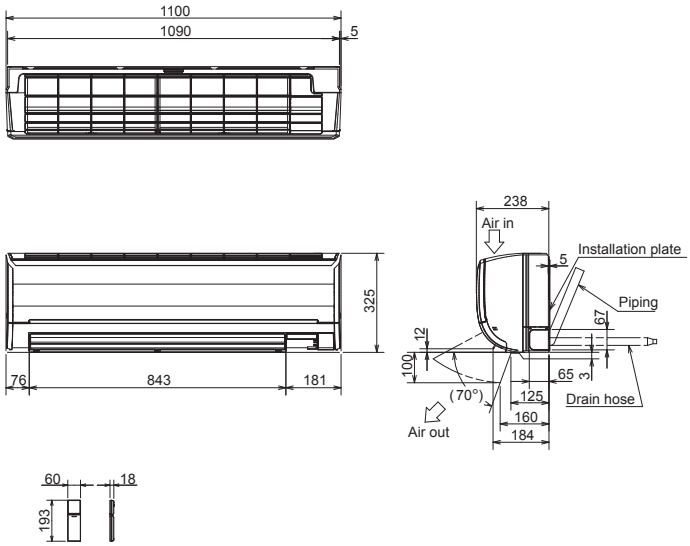

Unit : mm

## MSZ-BT20VG MSZ-BT25VG MSZ-BT35VG MSZ-BT50VG MSZ-BT20VGK MSZ-BT25VGK MSZ-BT35VGK MSZ-BT50VGK

**INDOOR UNIT**

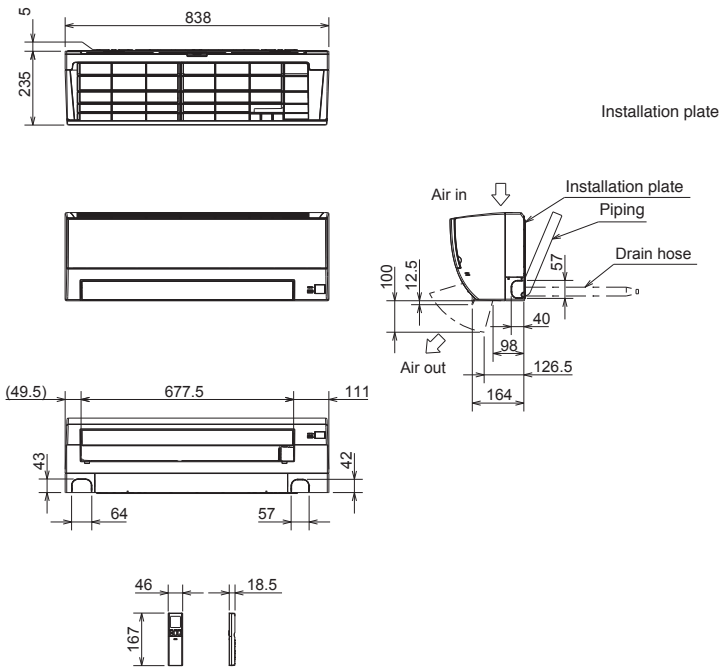


## MSZ-WN25VA MSZ-WN35VA

**INDOOR UNIT**

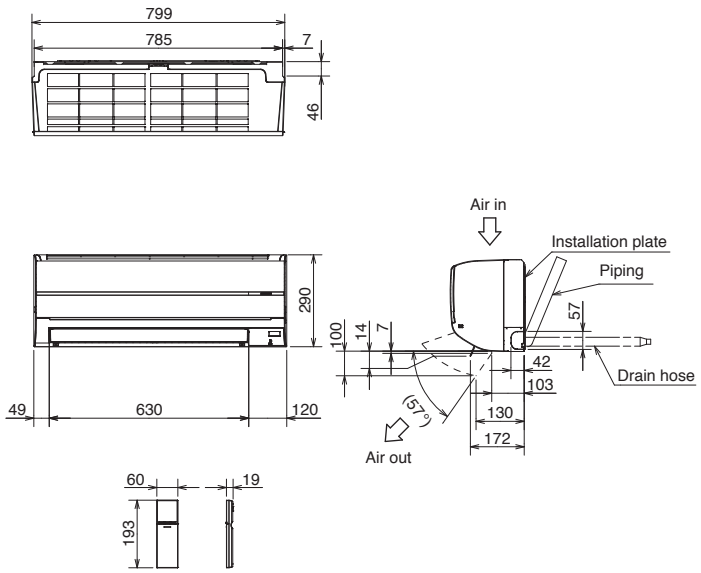


## MSZ-DM25VA MSZ-DM35VA

**INDOOR UNIT**

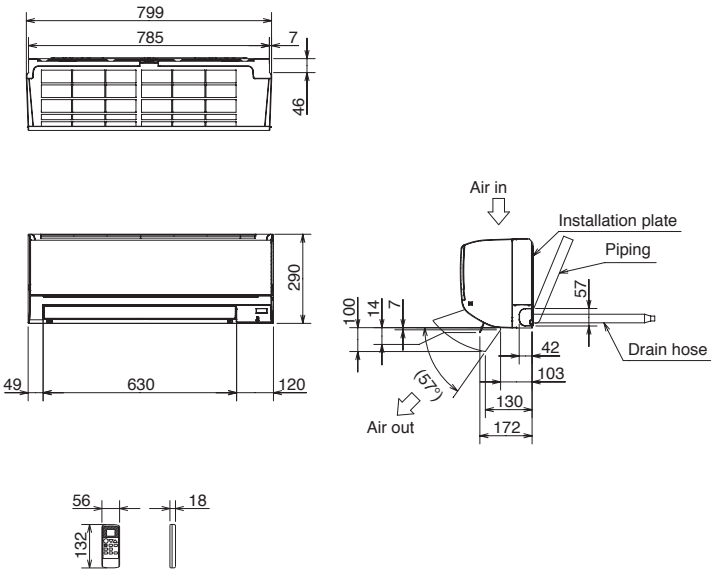


## MSZ-HJ25VA MSZ-HJ35VA MSZ-HJ50VA

**INDOOR UNIT**

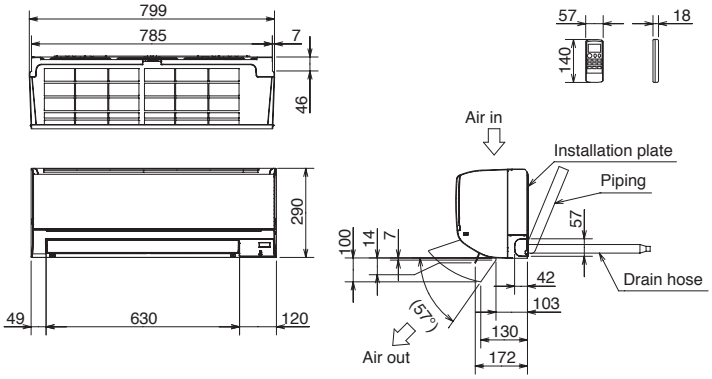


## MSZ-HJ60VA MSZ-HJ71VA MSY-TP35VF MSY-TP50VF

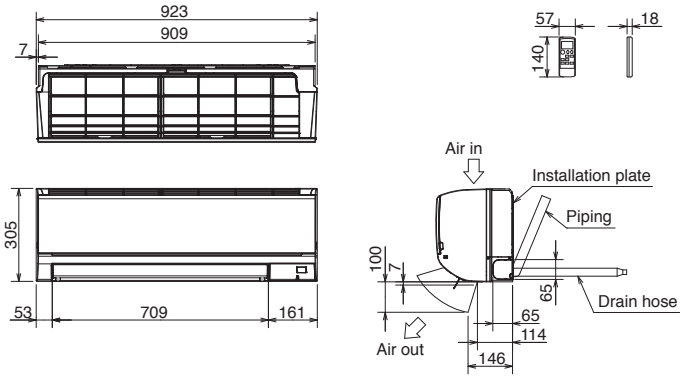

Unit : mm

## MSZ-SF15VA MSZ-SF20VA

### INDOOR UNIT

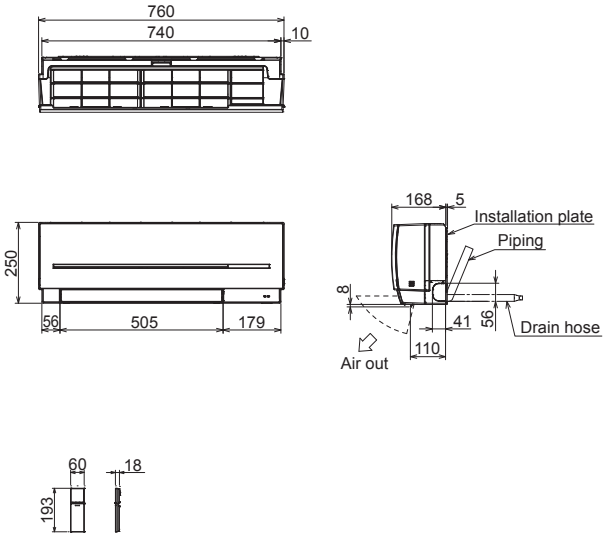


## MSZ-HR25VF MSZ-HR35VF MSZ-HR42VF MSZ-HR50VF

### INDOOR UNIT

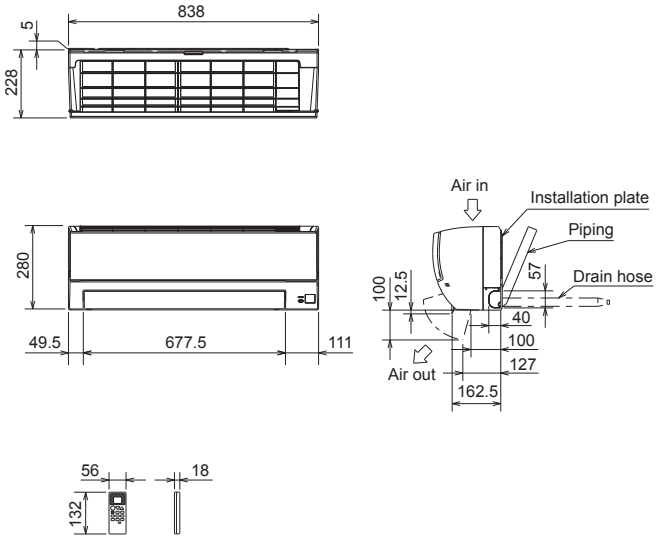


## MSZ-HR60VF MSZ-HR71VF

### INDOOR UNIT

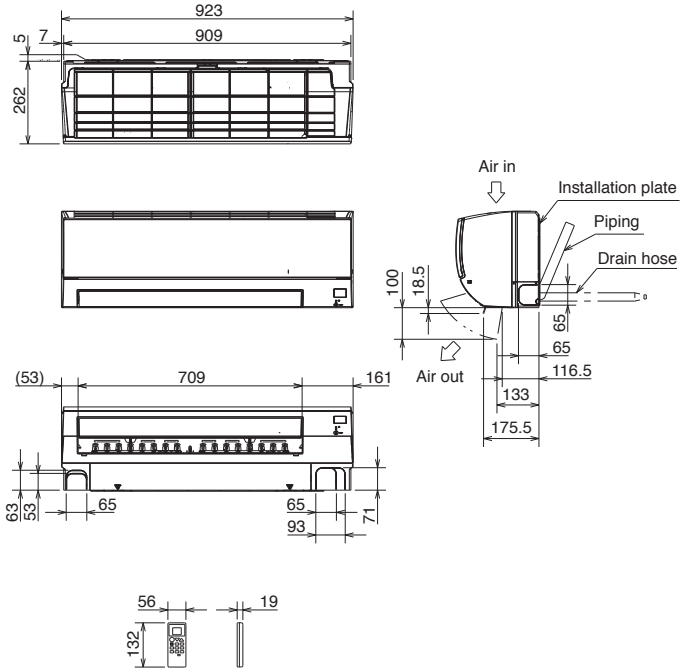


## MUZ-HR25VF MUZ-HR35VF MUZ-BT20VG MUZ-BT25VG MUZ-BT35VG

### OUTDOOR UNIT

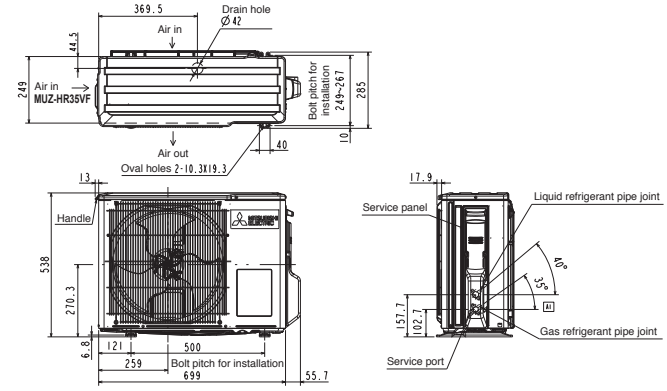


## MUZ-HR42VF MUZ-HR50VF

### OUTDOOR UNIT

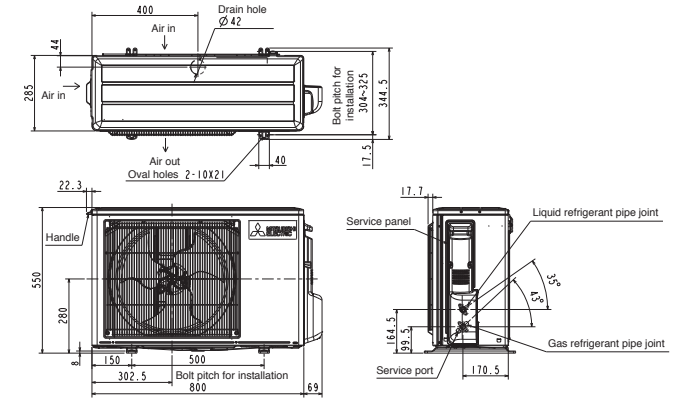

Unit : mm

## MFZ-KT25VG MFZ-KT35VG MFZ-KT50VG MFZ-KT60VG

### INDOOR UNIT

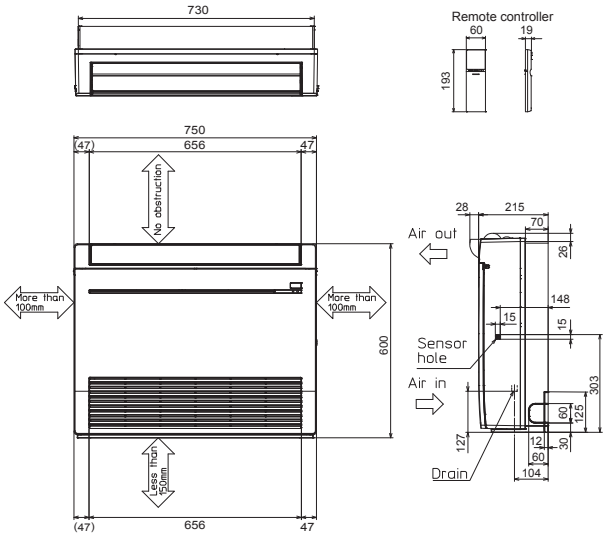


## MFZ-KJ25VE2 MFZ-KJ35VE2 MFZ-KJ50VE2

### INDOOR UNIT

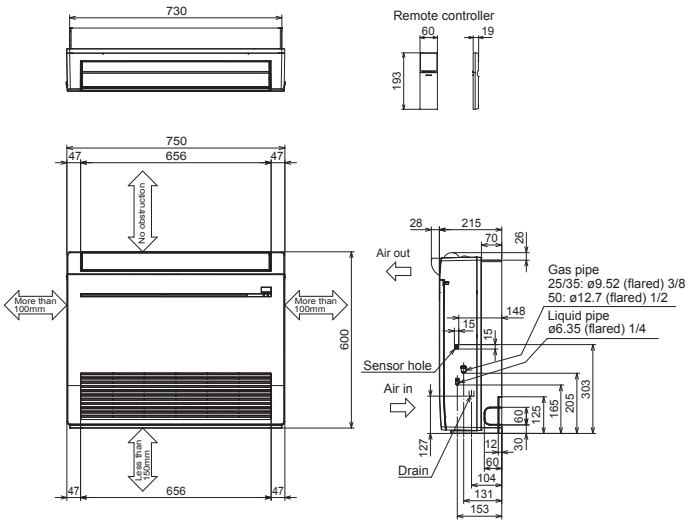


## MLZ-KP25VF MLZ-KP35VF MLZ-KP50VF

### INDOOR UNIT

INDOOR UNIT OUTLINE DRAWING

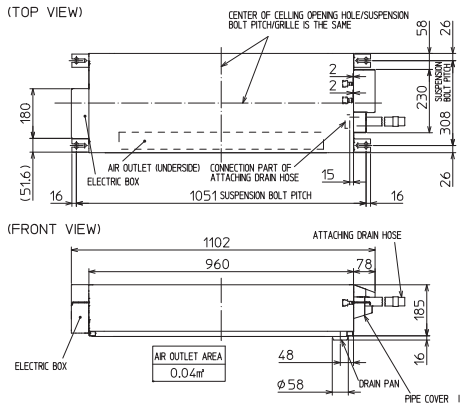


REMOTE CONTROLLER OUTLINE DRAWING

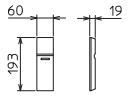


(RIGHT SIDE VIEW)

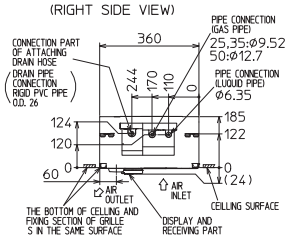


INDOOR UNIT DETAIL VIEW

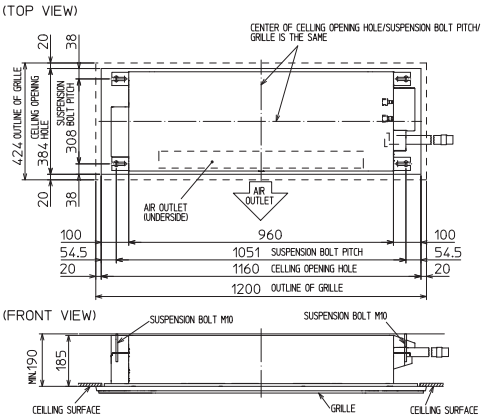


GRILLE OUTLINE DRAWING

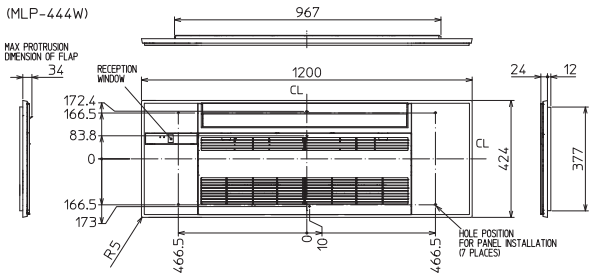


| | | KP25/35VF | KP50VF |
|---|---|---|---|
| EXTENSION PIPE | LIQUID PIPE O.D. | ø6.35 | |
| | GAS PIPE O.D. | ø9.52 | ø12.7 |
| CONNECTIONG OF PIPE | LIQUID PIPE | FLARED CONNECTION ø6.35 | |
| | GAS PIPE | FLARED CONNECTION ø9.52 | FLARED CONNECTION ø12.7 |
| DRAIN HOSE | | HEAT INSULATER O.D. ø32 / CONNECTION I.D. ø25 / EFFECTIVE LENGTH 480 | |
| DRAIN PIPE CONNECTION | | RIGID PVC PIPE O.D. 26 | |

NOTE1. CUTTING ATTACHING DRAIN HOSE CAN BE USED.

THE METHOD FOR STANDING DRAIN FROM INDOOR UNIT
※ CUTTING ATTACHING DRAIN HOSE CAN BE USED

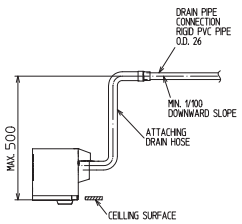

Unit : mm

**MUZ-LN25VG** **MUZ-LN25VGHZ** **MUZ-BT20VG**
**MUZ-LN35VG** **MUZ-LN35VGHZ** **MUZ-BT25VG**
**MUZ-AP20VG** **MUZ-BT35VG**
**MUZ-AP25VG** **MUZ-AP25VGH** **MUZ-BT50VG**
**MUZ-AP35VG** **MUZ-AP35VGH**
**MUZ-AP42VG** **MUZ-AP42VGH** **MUZ-HR42VF**
**MUZ-FH25VE** **MUZ-FH35VE** **MUZ-HR50VF**
**MUZ-FH25VEHZ** **MUZ-FH35VEHZ**
**MUZ-EF25VG** **MUZ-EF25VGH**
**MUZ-EF35VG** **MUZ-EF35VGH**
**MUZ-EF42VG** **MUY-TP35VF** **MUY-TP50VF**
**MUZ-SF25VE** **MUZ-SF25VEH** **MUZ-SF35VE**
**MUZ-SF35VEH** **MUZ-SF42VE** **MUZ-SF42VEH**
**MUZ-HJ50VA**
**MUFZ-KJ25VE** **MUFZ-KJ35VE**
**MUFZ-KJ25VEHZ** **MUFZ-KJ35VEHZ**

**OUTDOOR UNIT**

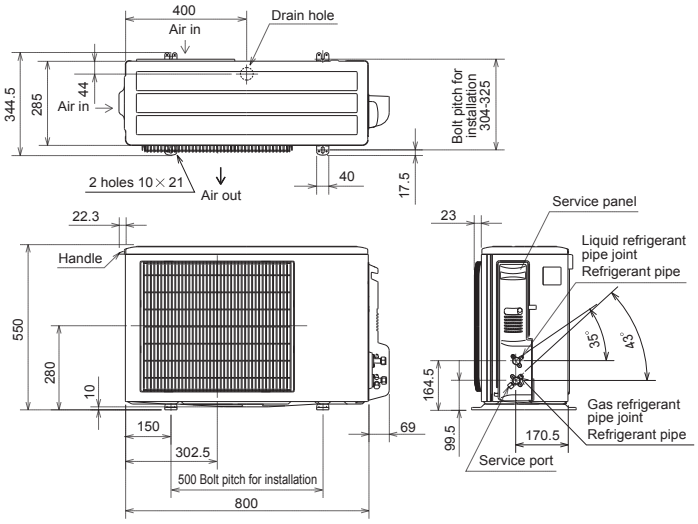


**MUZ-LN50VGHZ** **MUZ-LN60VG** **MUZ-AP71VG**
**MUZ-FH50VE** **MUZ-FH50VEHZ**
**MUZ-SF50VE** **MUZ-SF50VEH**
**MUZ-GF60VE** **MUZ-GF71VE**
**MUZ-HJ60VA** **MUZ-HJ71VA**
**MUFZ-KJ50VE** **MUFZ-KJ50VEHZ**

**OUTDOOR UNIT**

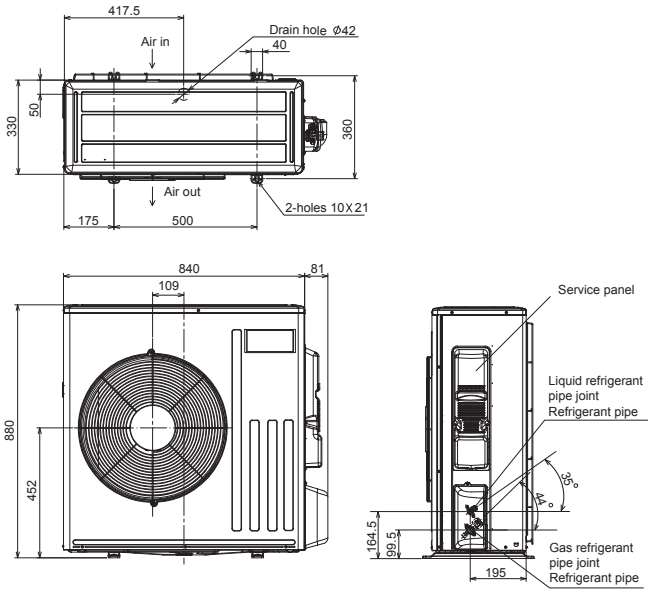


**MUZ-WN25VA** **MUZ-WN35VA** **MUZ-HR25VF**
**MUZ-DM25VA** **MUZ-DM35VA** **MUZ-HR35VF**
**MUZ-HJ25VA** **MUZ-HJ35VA**

**OUTDOOR UNIT**

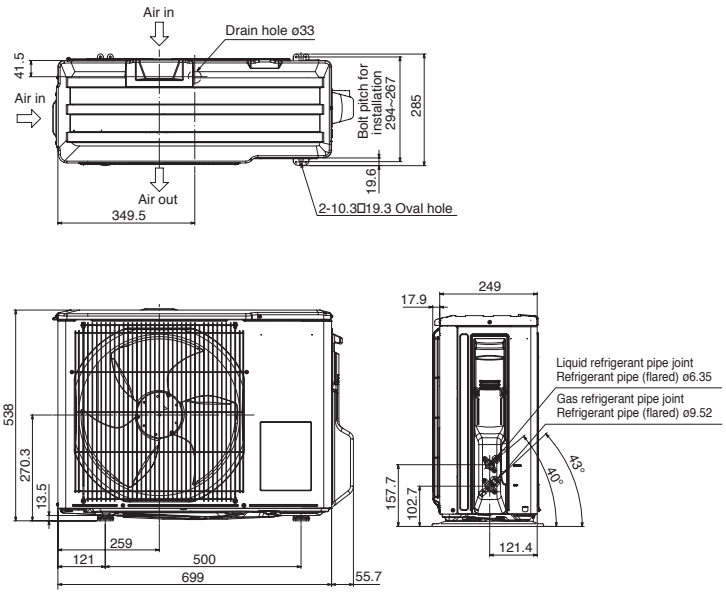


**MUZ-LN50VG** **MUZ-AP60VG**
**MUZ-AP50VG** **MUZ-AP50VGH**
**MUZ-EF50VG**
**MUZ-HR60VF** **MUZ-HR71VF**

**OUTDOOR UNIT**

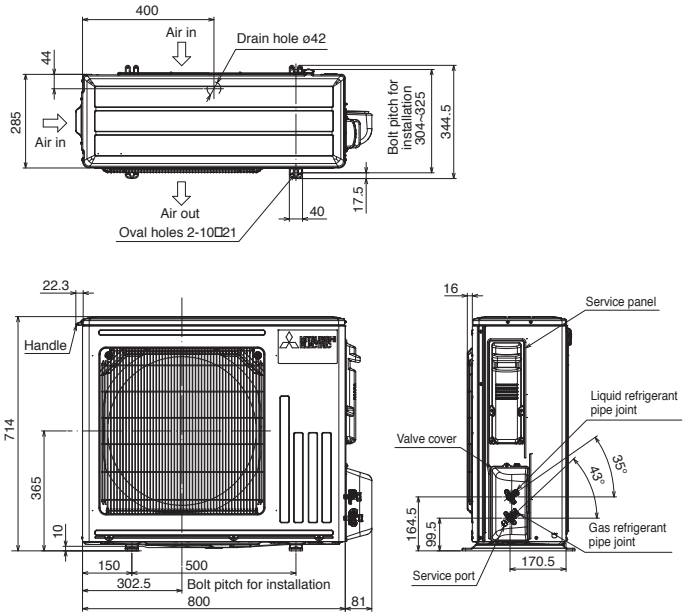

Unit : mm

## SLZ-M15FA
## SLZ-M25FA SLZ-M35FA
## SLZ-M50FA SLZ-M60FA

### INDOOR UNIT

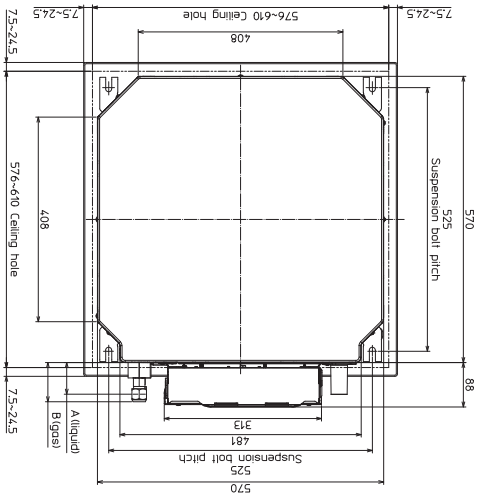


| Models | ① Refrigerent pipe (liquid) | ② Refrigerent pipe (gas) | A | B |
|---|---|---|---|---|
| SLZ-M15FA<br>SLZ-M25FA<br>SLZ-M35FA | φ6.35mm<br>flared connection 1/4F | φ9.52mm<br>flared connection 3/8F | 63mm | 72mm |
| SLZ-M50FA | φ6.35mm<br>flared connection 1/4F | φ12.7mm<br>flared connection 1/2F | 63mm | 78mm |
| SLZ-M60FA | φ6.35mm<br>flared connection 1/4F | φ15.88mm<br>flared connection 5/8F | 63mm | 78mm |

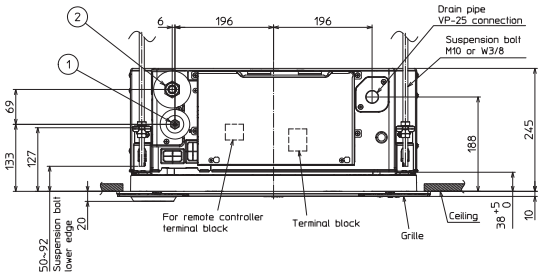


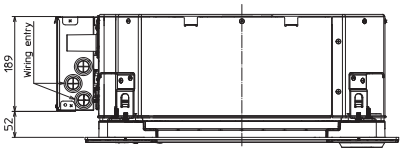


## SEZ-M25DA(L) SEZ-M35DA(L) SEZ-M50DA(L) SEZ-M60DA(L) SEZ-M71DA(L)

### INDOOR UNIT

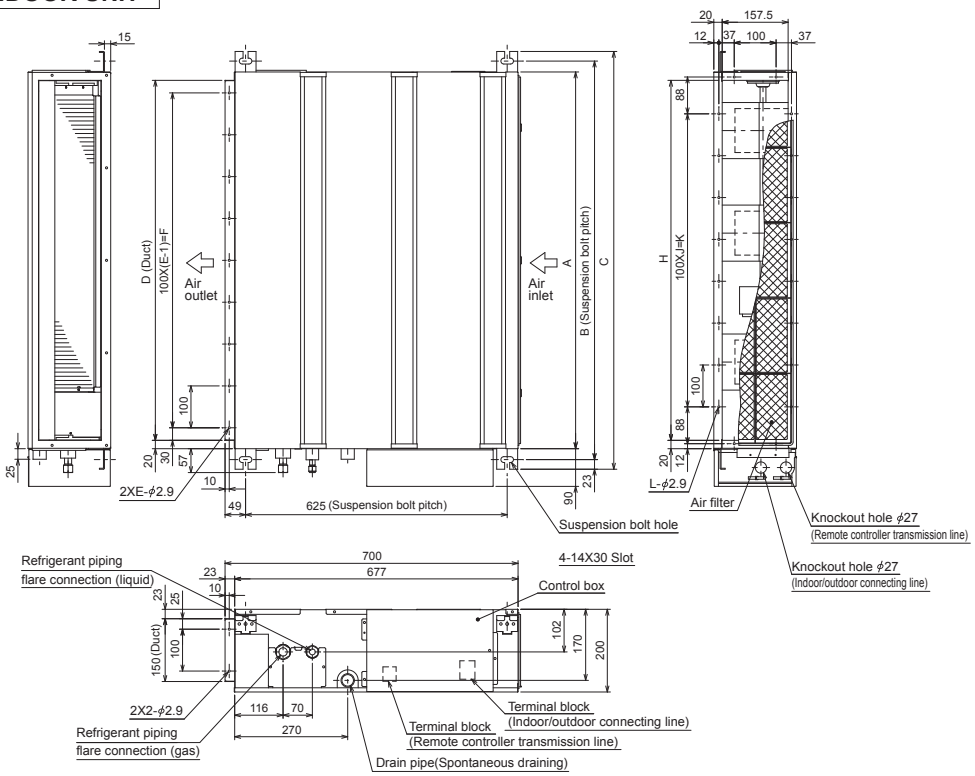


| Model | A | B | C | D | E | F | G | H | J | K | L |
|---|---|---|---|---|---|---|---|---|---|---|---|
| SEZ-M25DAL/DA | 700 | 752 | 798 | 660 | 7 | 600 | 800 | 660 | 5 | 500 | 16 |
| SEZ-M35DAL/DA<br>SEZ-M50DAL/DA | 900 | 952 | 998 | 860 | 9 | 800 | 1000 | 860 | 7 | 700 | 20 |
| SEZ-M60DAL/DA<br>SEZ-M71DAL/DA | 1100 | 1152 | 1198 | 1060 | 11 | 1000 | 1200 | 1060 | 9 | 900 | 24 |

Notes:
1. Use M10 bolts for suspension (purchase locally).
2. Keep service space for maintenance at the bottom.
3. This chart is based on the SEZ-M50DAL/DA, which has three fans.
   SEZ-M25, 35DAL/DA has two fans, and SEZ-M60, 71DAL/DA has four fans.
4. If an inlet duct is used, remove the air filter supplied with the unit,
   and install a locally purchased filter on the suction side.

## SUZ-M25VA SUZ-M35VA

### OUTDOOR UNIT

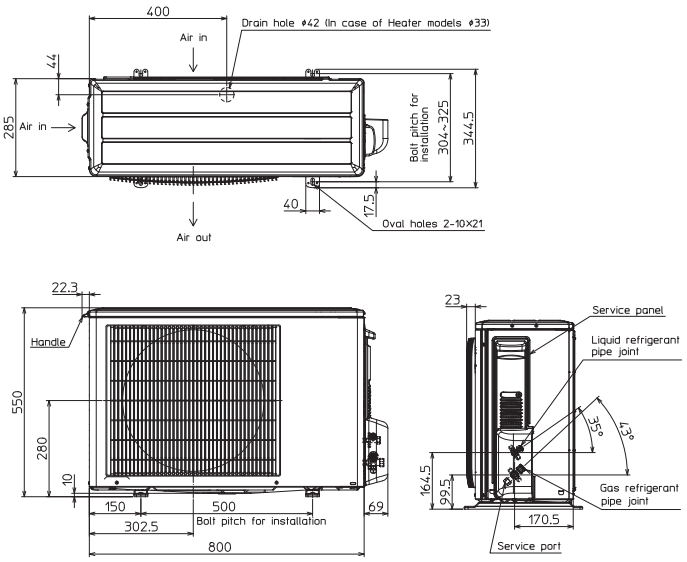


## SUZ-M50VA

### OUTDOOR UNIT

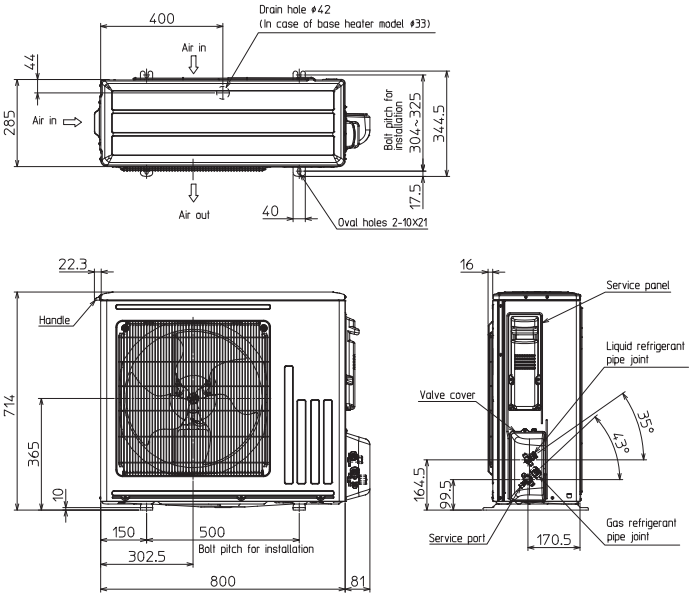


## SUZ-M60VA SUZ-M71VA

### INDOOR UNIT

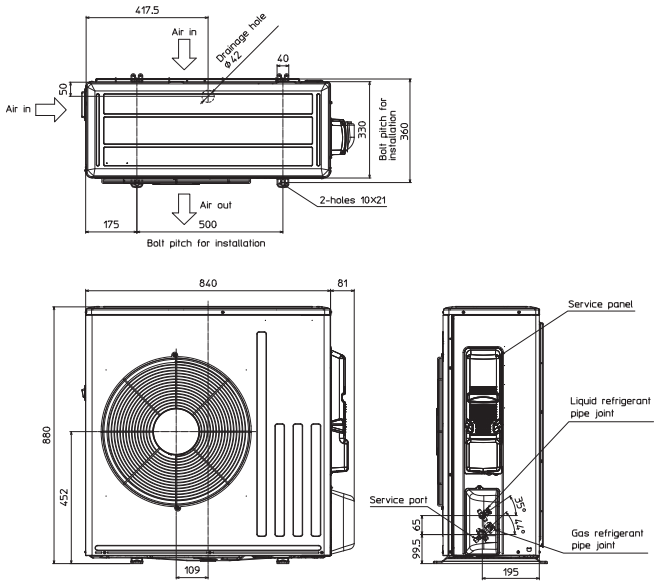


## SUZ-KA25VA6 SUZ-KA35VA6

### INDOOR UNIT

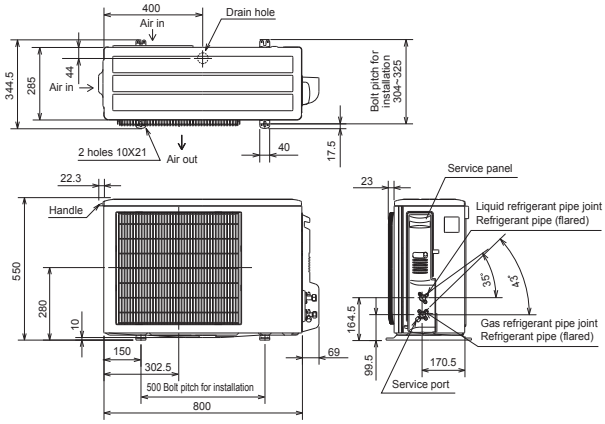


## SUZ-KA50VA6 SUZ-KA60VA6 SUZ-KA71VA6

### INDOOR UNIT

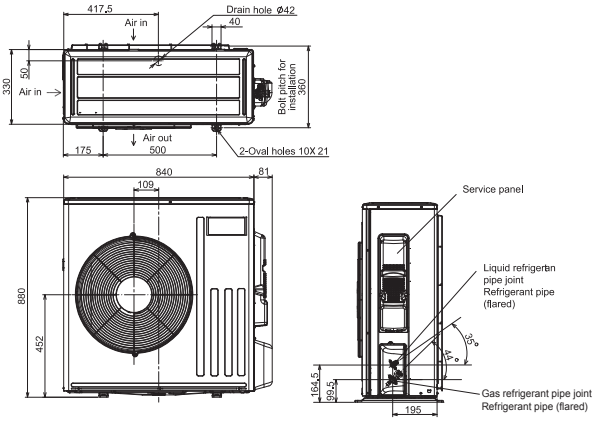

Unit : mm

## PLA-ZM35EA PLA-ZM50EA PLA-ZM60EA PLA-ZM71EA PLA-ZM100EA PLA-ZM125EA PLA-ZM140EA PLA-M35EA PLA-M50EA PLA-M60EA PLA-M71EA PLA-M100EA PLA-M125EA PLA-M140EA

### INDOOR UNIT

PLA-ZM35/50/60/71/100/125/140EA
PLA-RP35/50/60/71/100/125/140EA

| ZM | ① | ② | A | B | C | D | E | F |
|---|---|---|---|---|---|---|---|---|
| 35/50 | REFRIGERANT PIPE ø6.35 FLARED CONNECTION 1/4F | REFRIGERANT PIPE ø12.7 FLARED CONNECTION 1/2F | 241 | 258 | 76 | 76.5 | 265 OR MORE | 3500 OR LESS |
| 60 | REFRIGERANT PIPE ø9.52 FLARED CONNECTION 3/8F | REFRIGERANT PIPE ø15.88 FLARED CONNECTION 5/8F | | | 79.5 | 79.5 | | |
| 71 | | | 281 | 298 | | | 305 OR MORE | 4500 OR LESS |
| 100-140 | | | | | | | | |

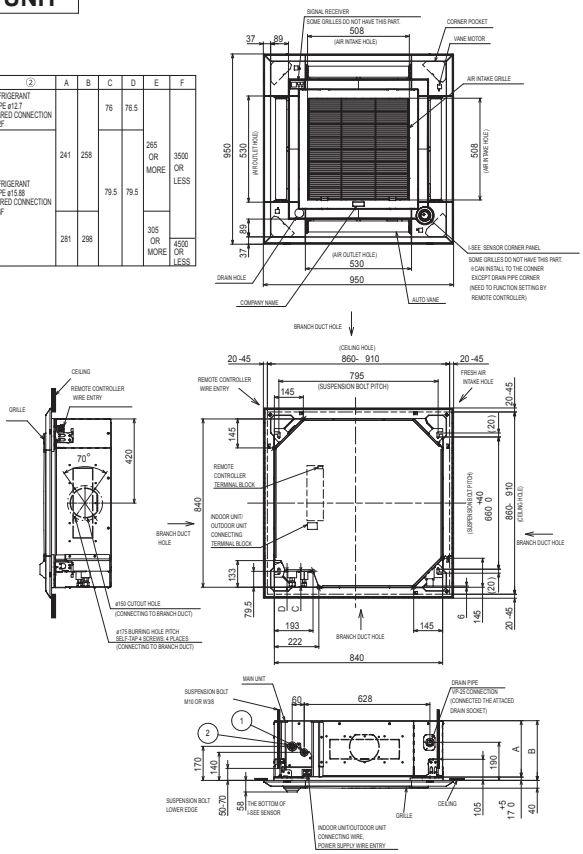


## PKA-M35HA(L) PKA-M50HA(L)

### INDOOR UNIT

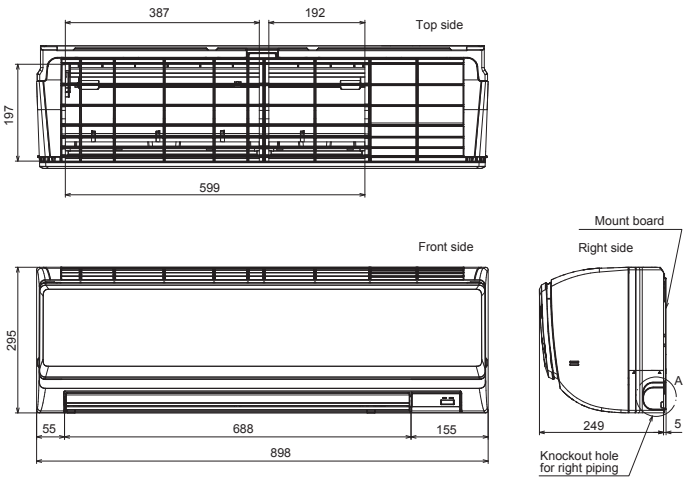


## PKA-M60KA(L) PKA-M71KA(L) PKA-M100KA(L)

### INDOOR UNIT

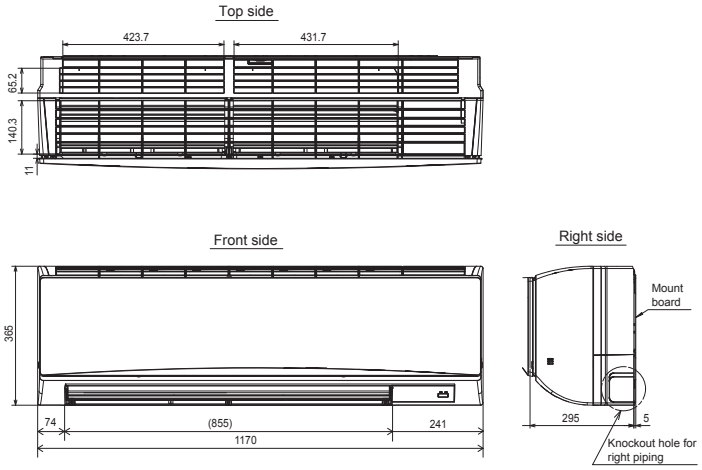


## PCA-M35KA PCA-M50KA

### INDOOR UNIT

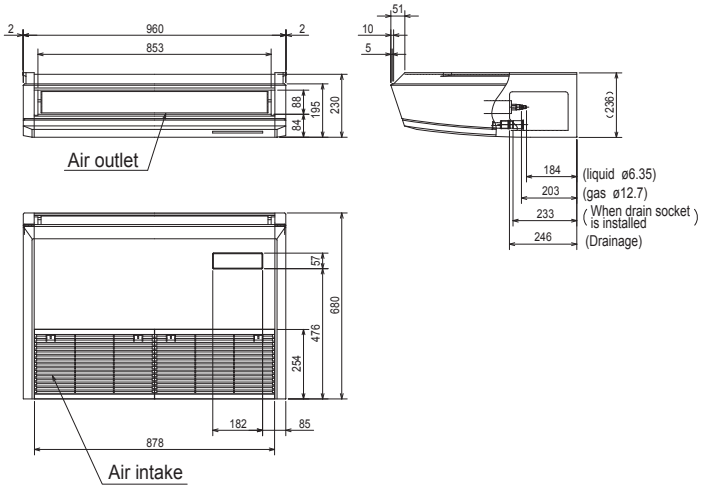


NOTES.
1.Use M10 or W3/8 screw for anchor bolt.
2.Please be sure when installing the drain pump (option parts), refrigerant pipe will be only upward.

Unit : mm

## PCA-M60KA PCA-M71KA

### INDOOR UNIT

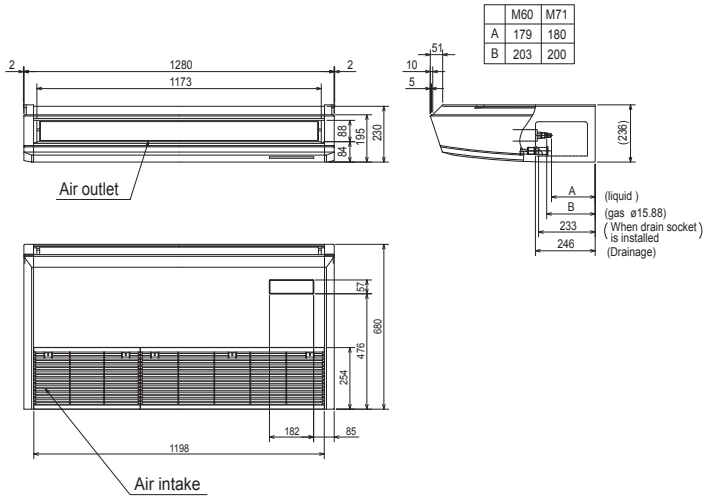


| | M60 | M71 |
|---|---|---|
| A | 179 | 180 |
| B | 203 | 200 |

NOTES.
1.Use M10 or W3/8 screw for anchor bolt.
2.Please be sure when installing the drain pump (option parts), refrigerant pipe will be only upward.

Use the current nuts meeting the pipe size of the outdoor unit.
Available pipe size

## PCA-M100KA PCA-M125KA PCA-M140KA

### INDOOR UNIT

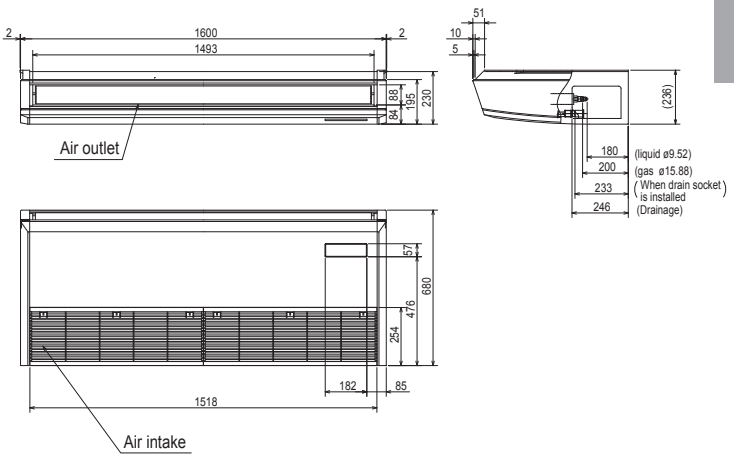


NOTES.
1.Use M10 or W3/8 screw for anchor bolt.
2.Please be sure when installing the drain pump (option parts), refrigerant pipe will be only upward.

## PCA-M71HA

### INDOOR UNIT

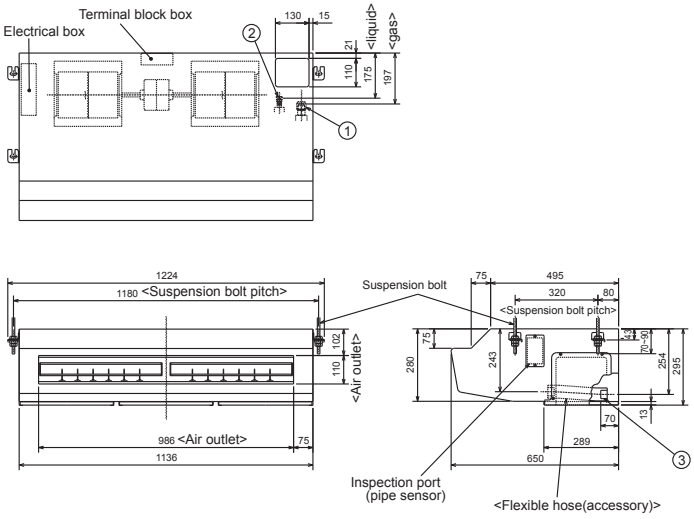


①Refrigerant pipe connection(gas pipe side/flared connection)
②Refrigerant pipe connection(liquid pipe side/flared connection)
③Flexible hose(accessory) →Drainage pipe connection

## PSA-RP71KA PSA-RP100KA PSA-RP125KA PSA-RP140KA

### INDOOR UNIT

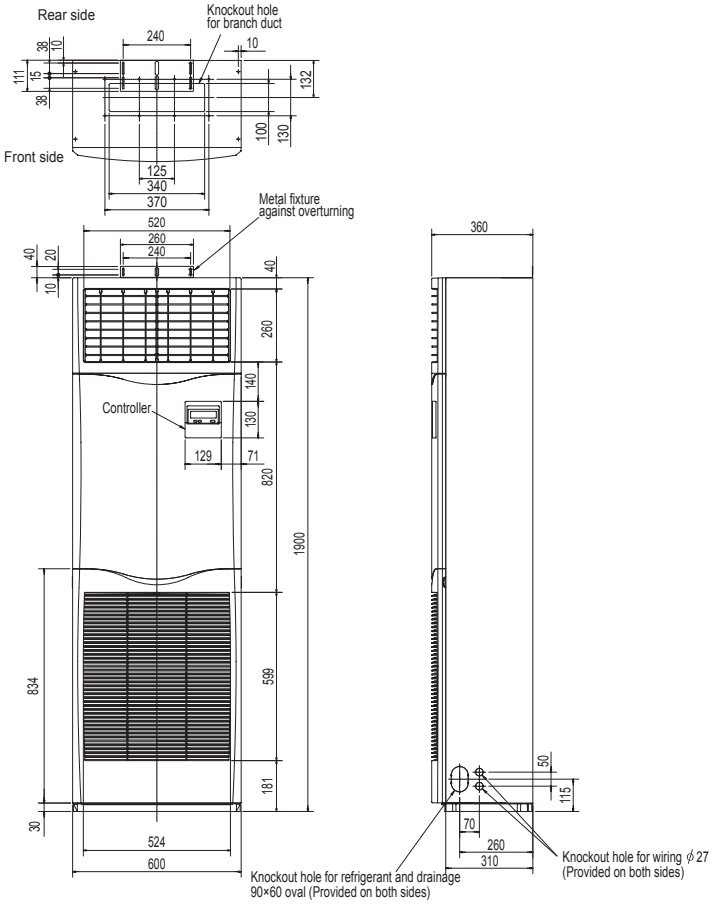

Unit : mm

## PEAD-M35JA PEAD-M50JA PEAD-M60JA PEAD-M71JA PEAD-M100JA PEAD-M125JA PEAD-M140JA

### INDOOR UNIT

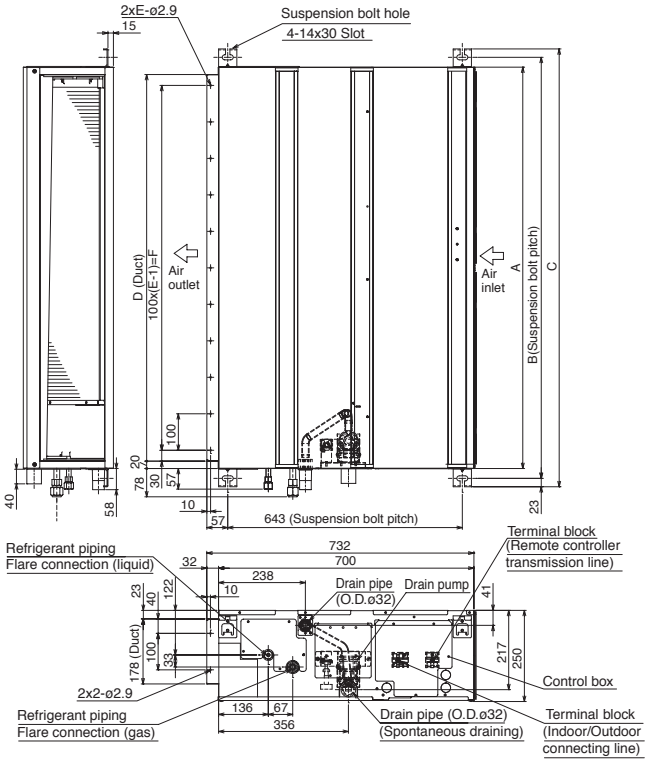


| Model | A | B | C | D | E | F | G |
|---|---|---|---|---|---|---|---|
| PEAD-M35, 50JA | 900 | 954 | 1000 | 860 | 9 | 800 | 858 |
| PEAD-M60JA | 1100 | 1154 | 1200 | 1060 | 11 | 1000 | 1058 |
| PEAD-M71JA | | | | | | | |
| PEAD-M100, 125JA | 1400 | 1454 | 1500 | 1360 | 14 | 1300 | 1358 |
| PEAD-M140JA | 1600 | 1654 | 1700 | 1560 | 16 | 1500 | 1558 |

## PEAD-M35JAL PEAD-M50JAL PEAD-M60JAL PEAD-M71JAL PEAD-M100JAL PEAD-M125JAL PEAD-M140JAL

### INDOOR UNIT

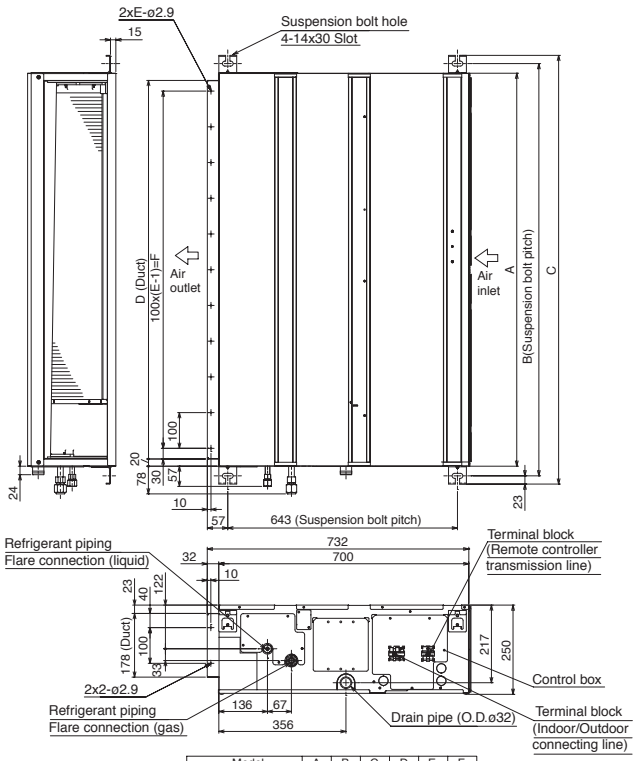


| Model | A | B | C | D | E | F |
|---|---|---|---|---|---|---|
| PEAD-M35, 50JAL | 900 | 954 | 1000 | 860 | 9 | 800 |
| PEAD-M60JAL | 1100 | 1154 | 1200 | 1060 | 11 | 1000 |
| PEAD-M71JAL | | | | | | |
| PEAD-M100, 125JAL | 1400 | 1454 | 1500 | 1360 | 14 | 1300 |
| PEAD-M140JAL | 1600 | 1654 | 1700 | 1560 | 16 | 1500 |

## PEA-RP200WKA PEA-RP250WKA

### INDOOR UNIT

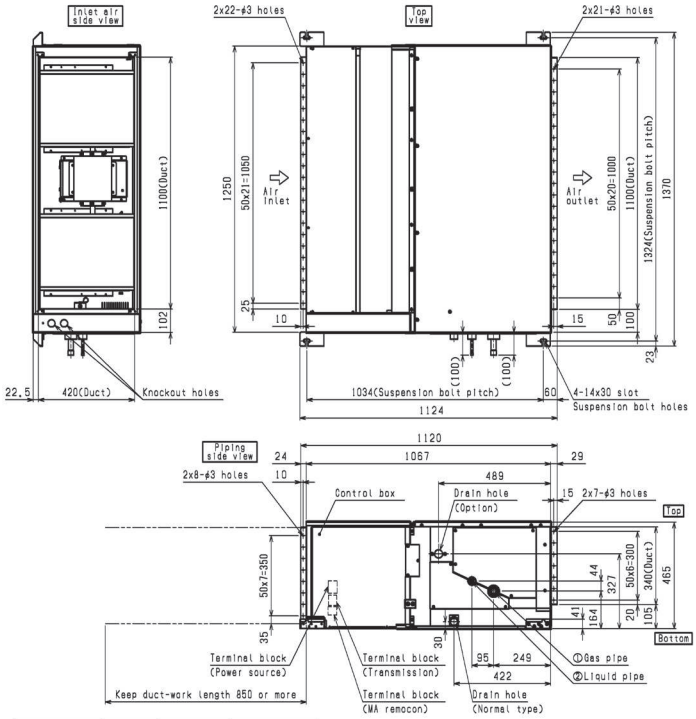


| MODEL | ①Gas pipe | ②Liquid pipe | ③Drain hose |
|---|---|---|---|
| PEA-RP200WKA | ø25.4 | ø9.52 | Drain hose 32mm <flexible joint> <accessory> |
| PEA-RP250WKA | | ø12.7 | |

Unit : mm

## PUHZ-SHW112VHA PUHZ-SHW112YHA PUHZ-SHW140YHA

### OUTDOOR UNIT

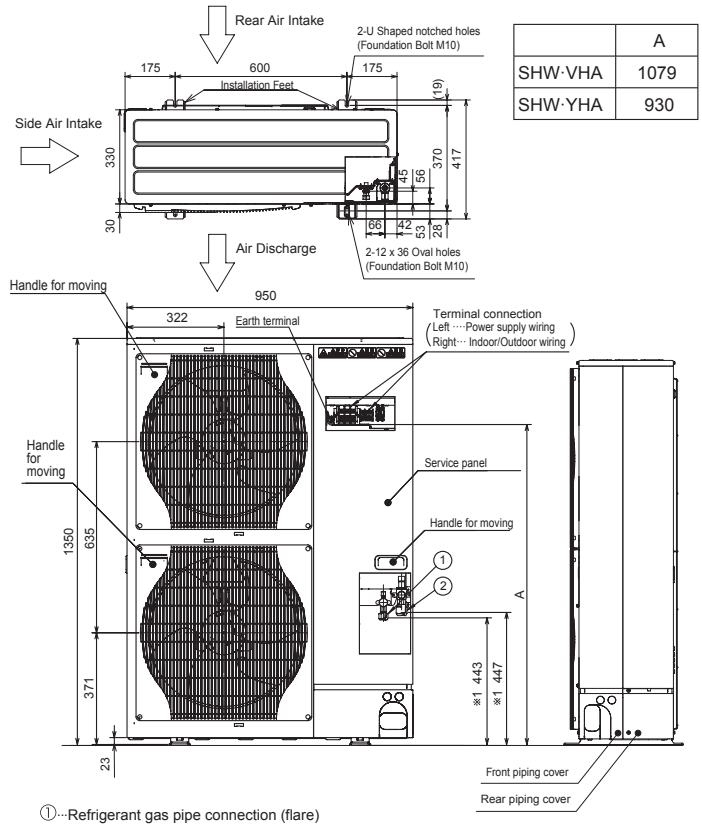


| | A |
|---|---|
| SHW·VHA | 1079 |
| SHW·YHA | 930 |

①···Refrigerant gas pipe connection (flare)
②···Refrigerant liquid pipe connection (flare)
※ ···Indicates stop valve connection location.

## PUZ-ZM35VKA PUZ-ZM50VKA

### OUTDOOR UNIT

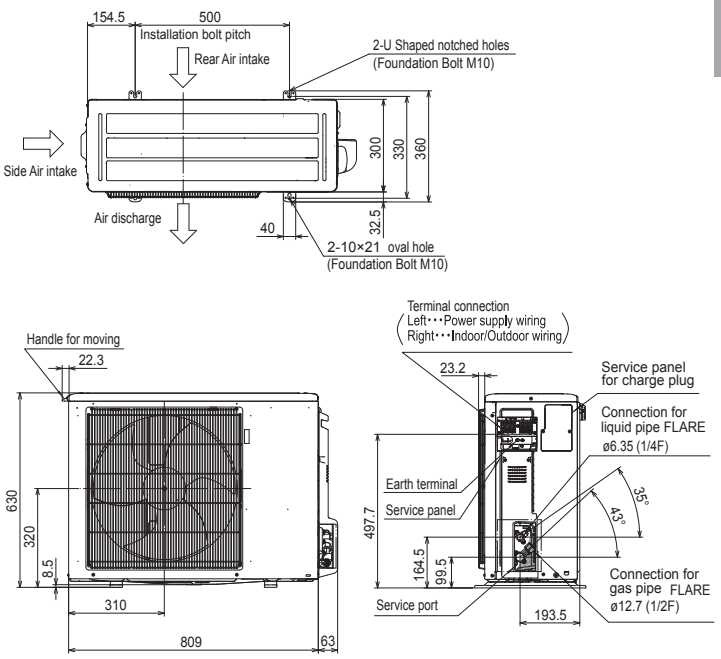


## PUZ-ZM60VHA PUZ-ZM71VHA

### OUTDOOR UNIT

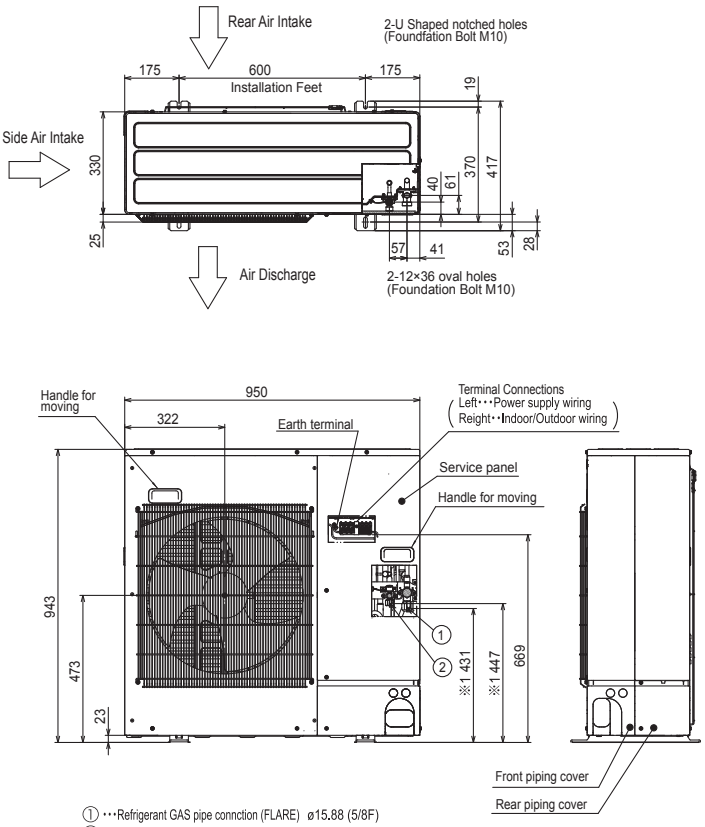


① ···Refrigerant GAS pipe connction (FLARE) ø15.88 (5/8F)
② ···Refrigerant LIQUID pipe connection (FLARE) ø9.52 (3/8F)
※ 1 ···Indication of STOP VALVE connection location.

## PUZ-ZM100VKA PUZ-ZM125VKA PUZ-ZM140VKA PUZ-ZM100YKA PUZ-ZM125YKA PUZ-ZM140YKA

### OUTDOOR UNIT

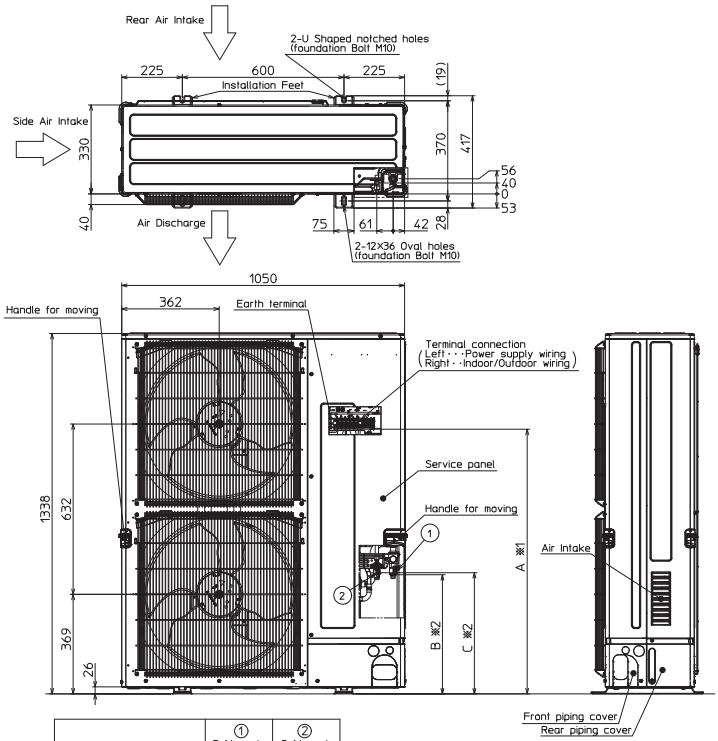


| Model | ① Refrigerant GAS pipe connection | ② Refrigerant LIQUID pipe connection |
|---|---|---|
| PUZ-ZM100~140V/YKA.UK | ø15.88 (5/8F) | ø9.52 (3/8F) |

| Model | A | B | C |
|---|---|---|---|
| PUZ-ZM100~140VKA.UK | 1067 | 442 | 450 |
| PUZ-ZM100~140YKA.UK | 919 | 442 | 450 |

※1···Indication of Terminal connection location.
※2···Indication of STOP VALVE connection location.

Unit : mm

## PUZ-ZM200YKA PUHZ-ZM250YKA

### OUTDOOR UNIT

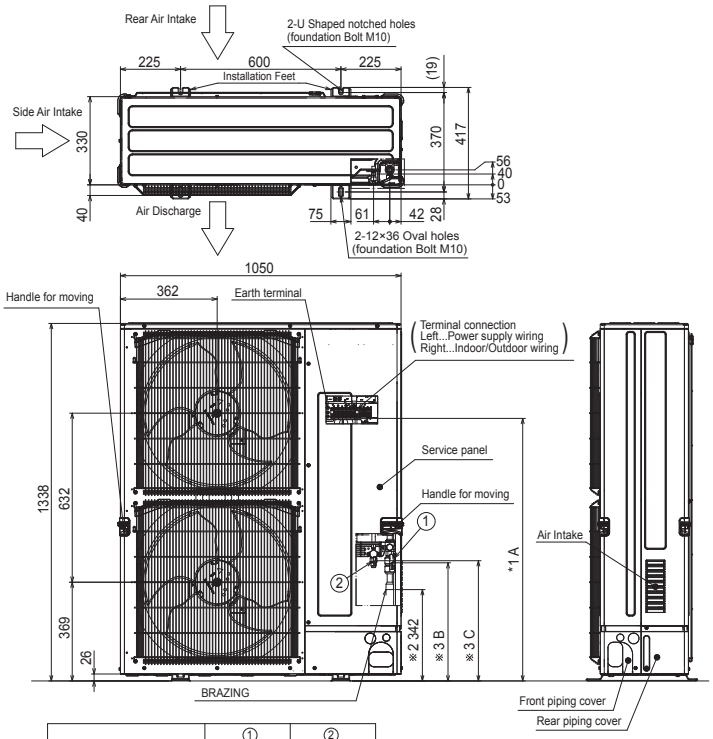


| Model | ① Refrigerant GAS pipe connection | ② Refrigerant LIQUID pipe connection |
|---|---|---|
| PUZ-ZM/M200YKA.UK | ø19.05 (3/4F) | ø9.52 (3/8F) |
| PUZ-ZM/M250YKA.UK | ø19.05 (3/4F) | ø12.7 (1/2F) |

| Model | A | B | C |
|---|---|---|---|
| PUZ-ZM/M200,250YKA.UK | 985 | 442 | 450 |

※1...Indication of Terminal connection location.
※2...Refrigerant GAS PIPE connection (BRAZING) O.Dø25.4.
※3...Indication of STOP VALVE connection location.

## PUHZ-ZRP200YKA3 PUHZ-ZRP250YKA3

### OUTDOOR UNIT

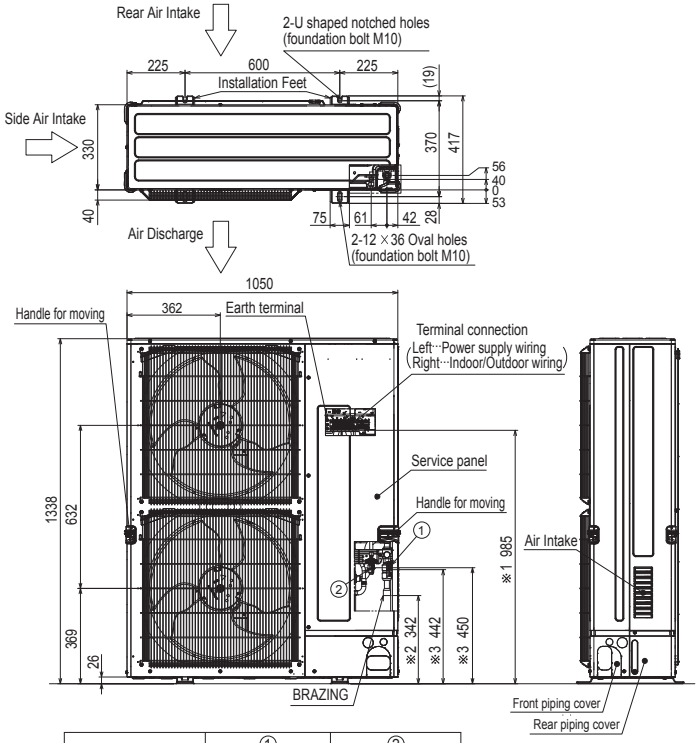


| Model | ① Refrigerant GAS pipe connection | ② Refrigerant LIQUID pipe connection |
|---|---|---|
| PUHZ-ZRP200YKA3 | ø19.05 (3/4F) | ø9.52 (3/8F) |
| PUHZ-ZRP250YKA3 | ø19.05 (3/4F) | ø12.7 (1/2F) |

※1···Indication of Terminal connection location.
※2···Refrigerant GAS pipe connection (BRAZING) O.Dø25.4.
※3···Indication of STOP VALVE connection location.

## PUZ-M100VKA PUZ-M100YKA
## PUZ-M125VKA PUZ-M125YKA
## PUZ-M140VKA PUZ-M140YKA

### OUTDOOR UNIT

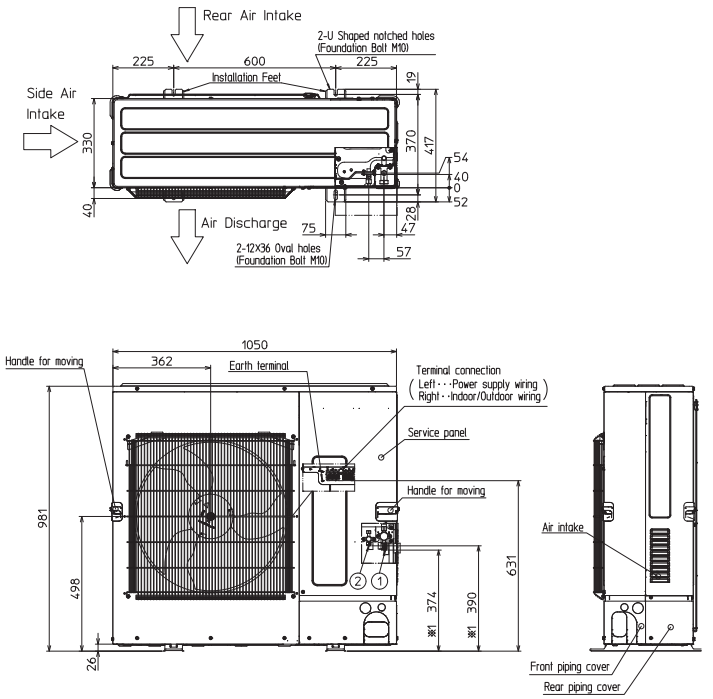


Example Of Notes

①···Refrigerant GAS pipe connection (FLARE) ø15.88 (5/8F)
②···Refrigerant LIQUID pipe connection (FLARE) ø9.52 (3/8F)
※1···Indication of STOP VALVE connection location.

## PUHZ-P100VKA PUHZ-P100YKA
## PUHZ-P125VKA PUHZ-P125YKA
## PUHZ-P140VKA PUHZ-P140YKA

### OUTDOOR UNIT

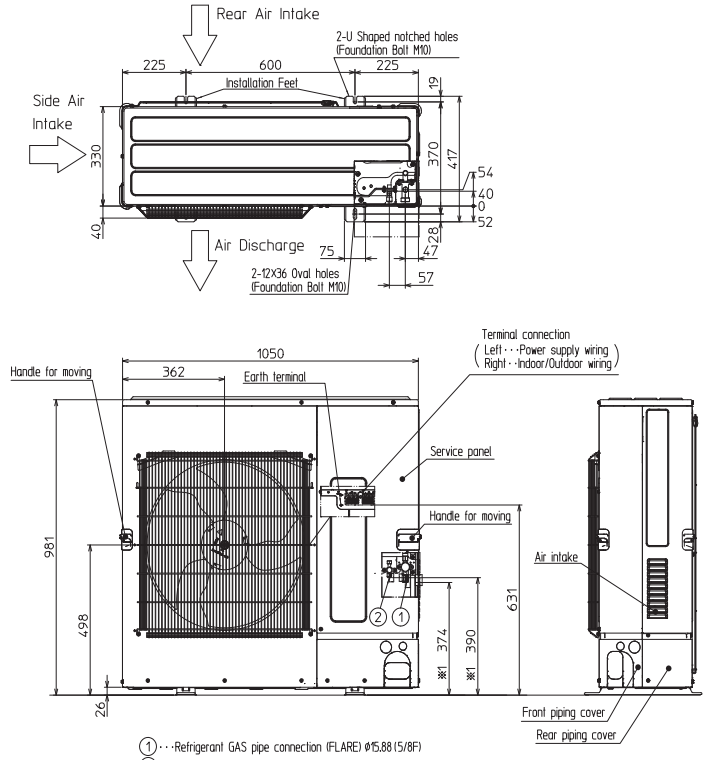


①···Refrigerant GAS pipe connection (FLARE) ø15.88 (5/8F)
②···Refrigerant LIQUID pipe connection (FLARE) ø9.52 (3/8F)
※1···Indication of STOP VALVE connection location.

Unit : mm

## PUZ-M200YKA PUZ-M250YKA

### OUTDOOR UNIT

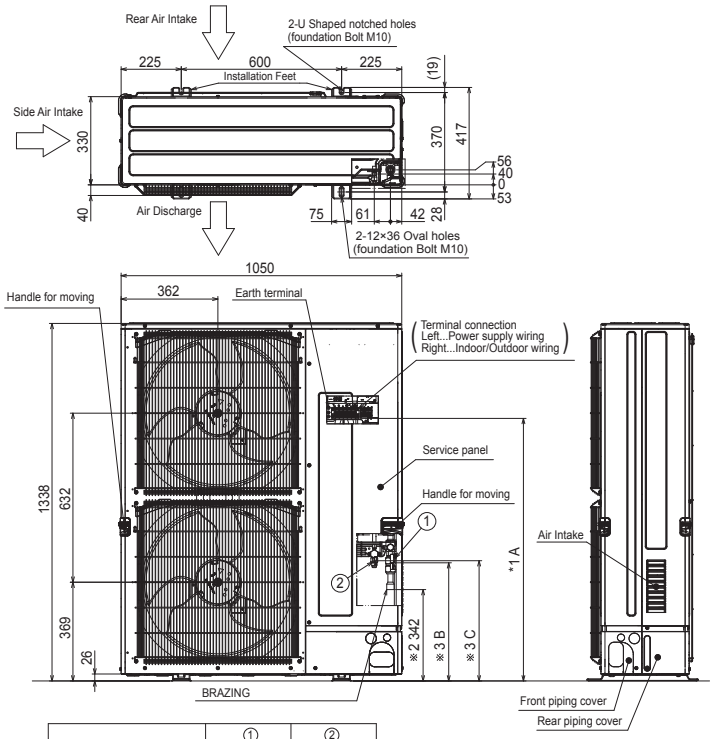


| Model | ① Refrigerant GAS pipe connection | ② Refrigerant LIQUID pipe connection |
|---|---|---|
| PUZ-ZM/M200YKA.UK | ø19.05 (3/4F) | ø9.52 (3/8F) |
| PUZ-ZM/M250YKA.UK | ø19.05 (3/4F) | ø12.7 (1/2F) |

| Model | A | B | C |
|---|---|---|---|
| PUZ-ZM/M200,250YKA.UK | 985 | 442 | 450 |

※1...Indication of Terminal connection location.
※2...Refrigerant GAS PIPE connection (BRAZING) O.Dø25.4.
※3...Indication of STOP VALVE connection location.

## PUHZ-P200YKA3 PUHZ-P250YKA3

### OUTDOOR UNIT

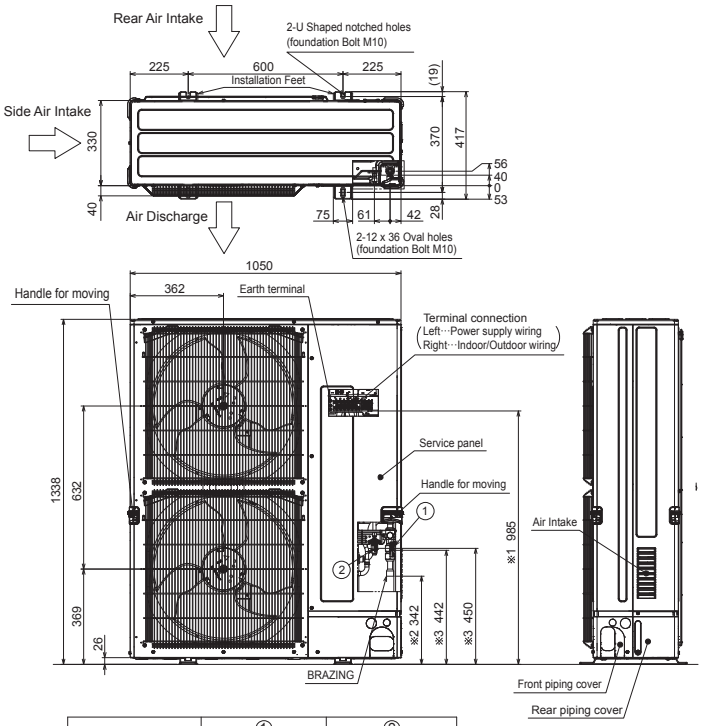


| Model | ① Refrigerant GAS pipe connection | ② Refrigerant LIQUID pipe connection |
|---|---|---|
| PUHZ-P200YKA3 | ø19.05 (3/4F) | ø9.52 (3/8F) |
| PUHZ-P250YKA3 | ø19.05 (3/4F) | ø12.7 (1/2F) |

※1···Indication of Terminal connection location.
※2···Refrigerant GAS pipe connection (BRAZING) O.Dø25.4.
※3···Indication of STOP VALVE connection location.

Unit : mm

## MXZ-2D33VA MXZ-2D42VA2 MXZ-2D53VA2 MXZ-2D53VAH2 MXZ-2DM40VA MXZ-2HA40VF MXZ-2HA50VF MXZ-2F33VF3 MXZ-2F42VF3 MXZ-2F53VF3 MXZ-2F53VFH3

**OUTDOOR UNIT**

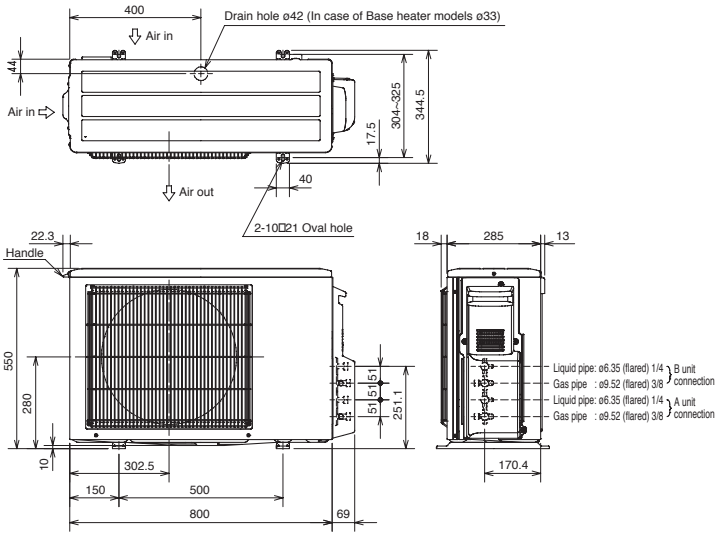


## MXZ-2E53VAHZ

**OUTDOOR UNIT**

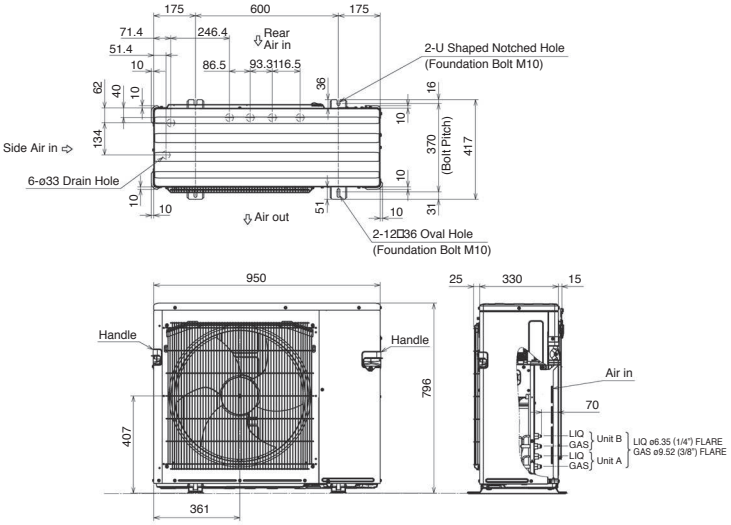


## MXZ-3E54VA MXZ-3E68VA MXZ-3DM50VA MXZ-3HA50VF MXZ-3F54VF3 MXZ-3F68VF3

**OUTDOOR UNIT**

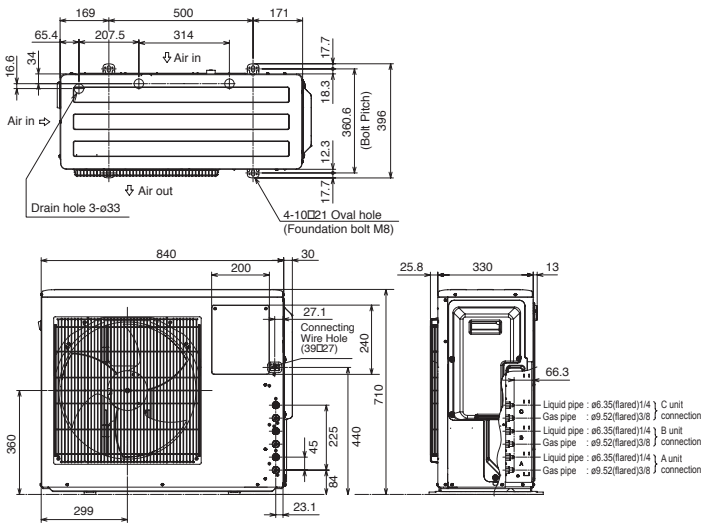


## MXZ-4E72VA MXZ-4F72VF3 MXZ-4F80VF3

**OUTDOOR UNIT**

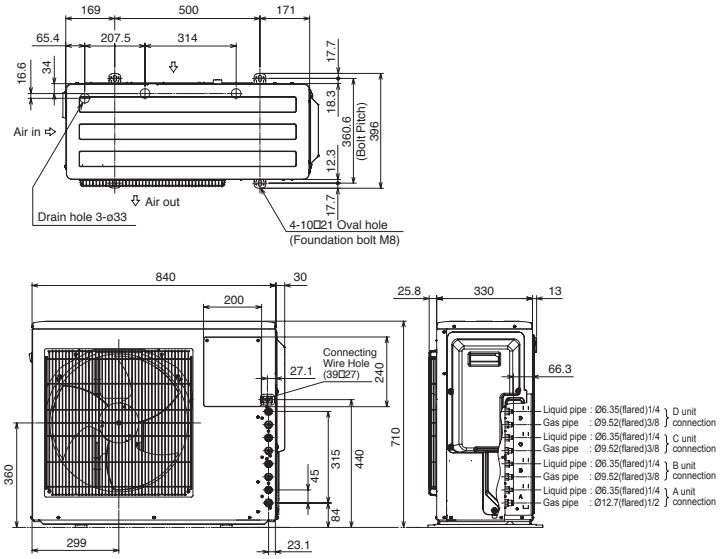

Unit : mm

## MXZ-4E83VA MXZ-5E102VA

**OUTDOOR UNIT**

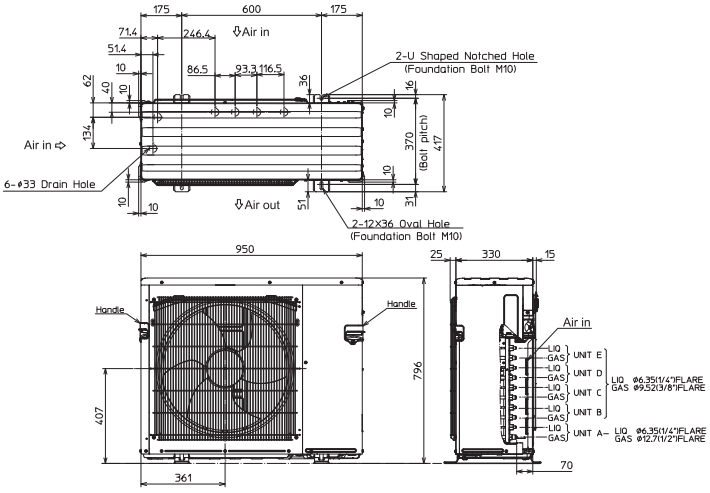


## MXZ-4E83VAHZ

**OUTDOOR UNIT**

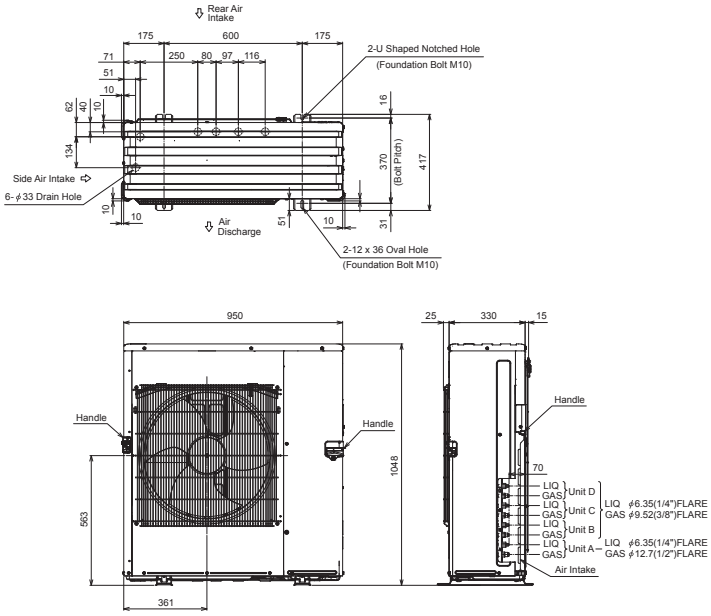


## MXZ-6D122VA2

**OUTDOOR UNIT**

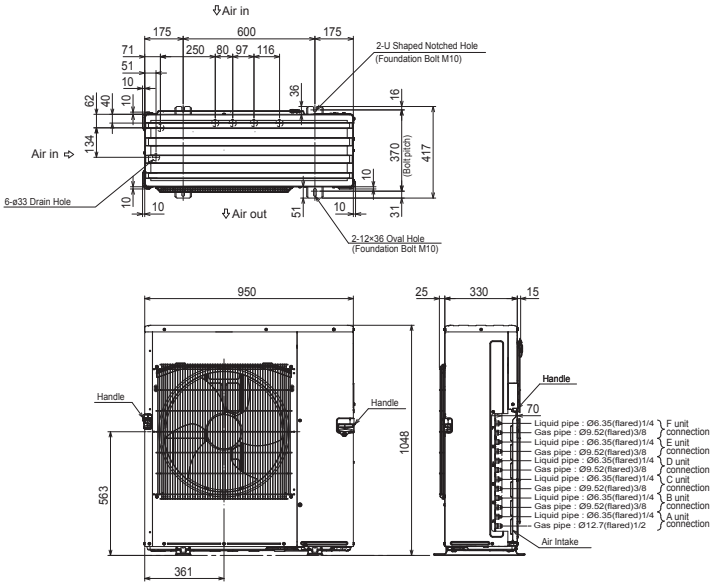

Unit : mm

## PUMY-P112/125/140VKM4(-BS)

### OUTDOOR UNIT

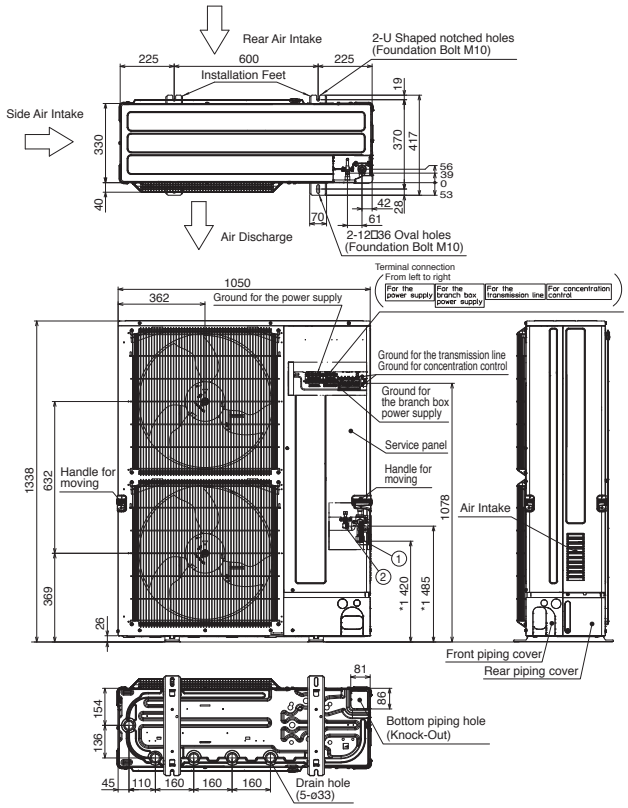


Example of Notes

① ···Refrigerant GAS pipe connection (FLARE) ø15.88 (5/8F)
② ···Refrigerant LIQUID pipe connection (FLARE) ø9.52 (3/8F)
*1 ···Indication of STOP VALVE connection location.

## PUMY-P112/125/140YKM(E)4(-BS)

### OUTDOOR UNIT

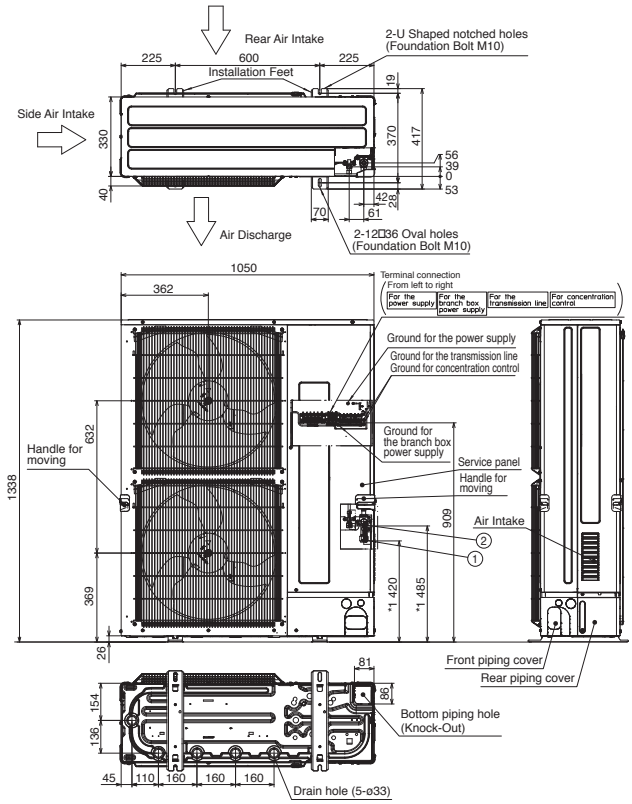


Example of Notes

① ···Refrigerant GAS pipe connection (FLARE) ø15.88 (5/8F)
② ···Refrigerant LIQUID pipe connection (FLARE) ø9.52 (3/8F)
*1 ···Indication of STOP VALVE connection location.

## PUMY-P200YKM2(-BS)

### OUTDOOR UNIT

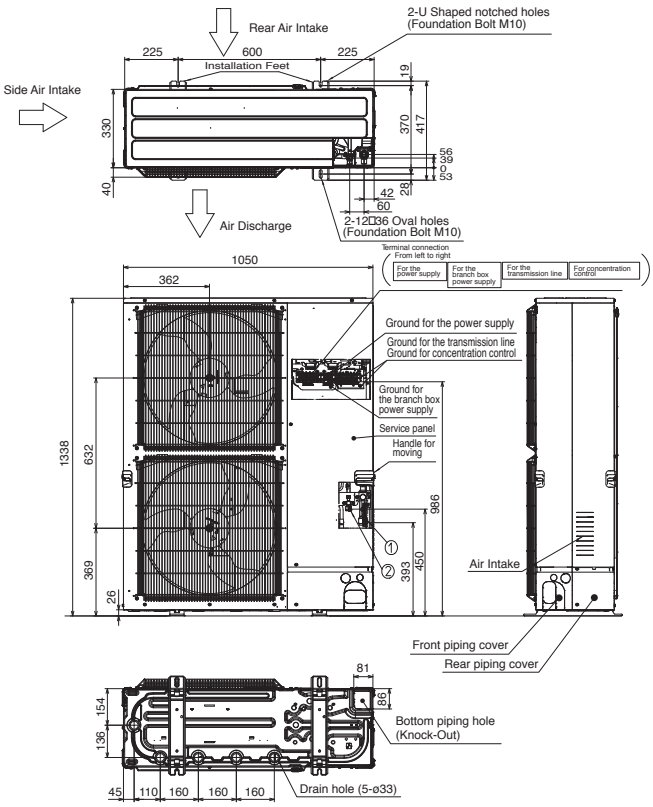


Example of Notes

① ···Refrigerant GAS pipe connection (FLARE) ø19.05 (3/4F)
② ···Refrigerant LIQUID pipe connection (FLARE) ø9.52 (3/8F)
*1 ···Indication of STOP VALVE connection location.

## PUMY-SP112/125/140VKM(-BS)
## PUMY-SP112/125/140YKM(-BS)

### OUTDOOR UNIT

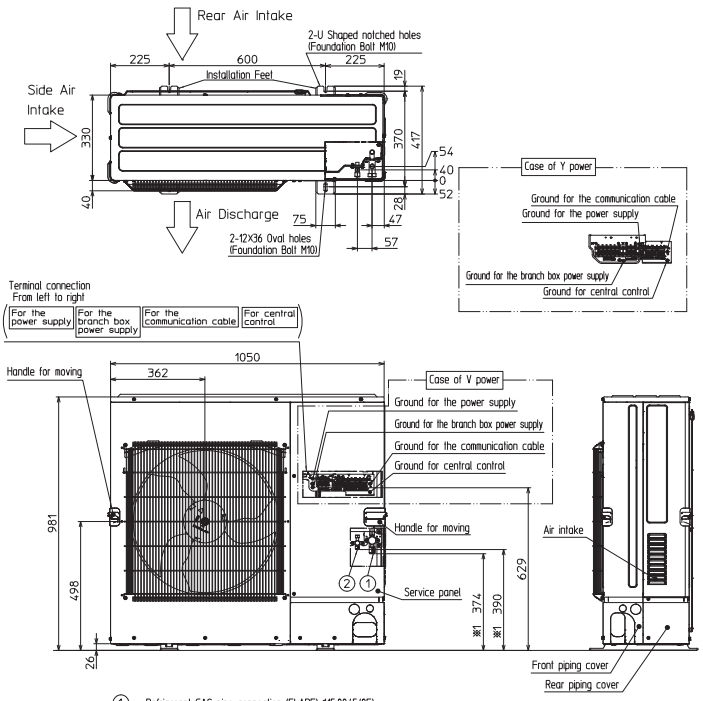


① ···Refrigerant GAS pipe connection (FLARE) ø15.88 (5/8F)
② ···Refrigerant LIQUID pipe connection (FLARE) ø9.52 (3/8F)
※1 ···Indication of STOP VALVE connection location.

Unit : mm

## PAC-MK53BC

Suspension bolt: W3/W8 (M10)

### Branch box

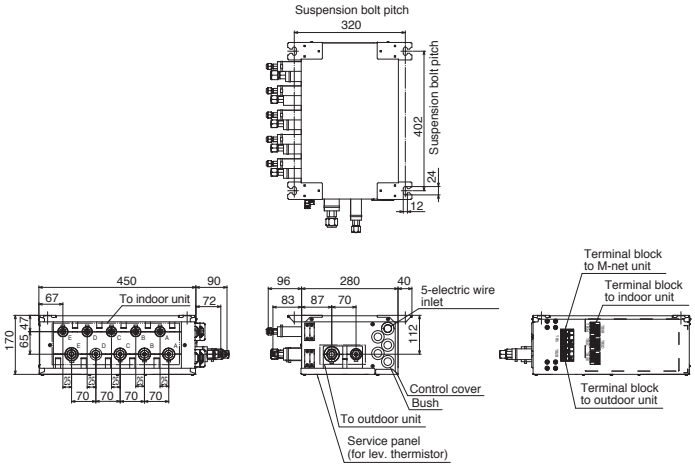


Suspension bolt : W3/8(M10)

Refrigerant pipe flared connection

| | A | B | C | D | E | To outdoor unit |
|---|---|---|---|---|---|---|
| Liquid pipe | 1/4F | 1/4F | 1/4F | 1/4F | 1/4F | 3/8F |
| Gas pipe | 3/8F | 3/8F | 3/8F | 3/8F | 1/2F | 5/8F |

## PAC-MK33BC

Suspension bolt: W3/W8 (M10)

### Branch box

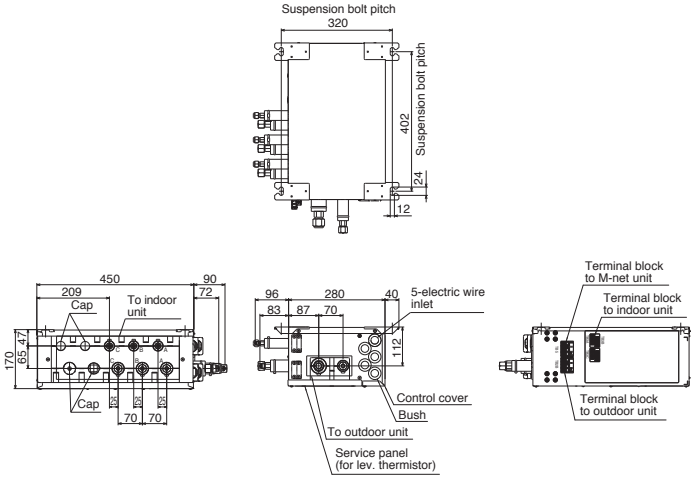


Suspension bolt : W3/8(M10)

Refrigerant pipe flared connection

| | A | B | C | | | To outdoor unit |
|---|---|---|---|---|---|---|
| Liquid pipe | 1/4F | 1/4F | 1/4F | | | 3/8F |
| Gas pipe | 3/8F | 3/8F | 3/8F | | | 5/8F |

## PAC-MK53BCB

Suspension bolt: W3/W8 (M10)

### Branch box

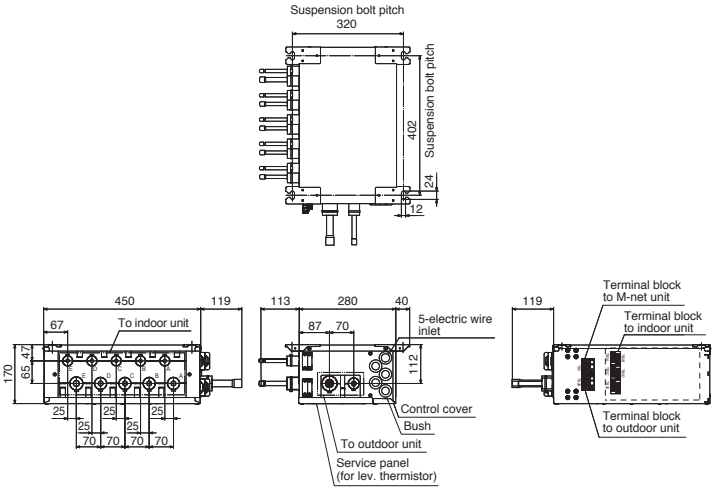


Suspension bolt : W3/8(M10)

Refrigerant pipe brazed connection

| | A | B | C | D | E | To outdoor unit |
|---|---|---|---|---|---|---|
| Liquid pipe | ø6.35 | ø6.35 | ø6.35 | ø6.35 | ø6.35 | ø9.52 |
| Gas pipe | ø9.52 | ø9.52 | ø9.52 | ø9.52 | ø12.7 | ø15.88 |

## PAC-MK33BCB

Suspension bolt: W3/W8 (M10)

### Branch box

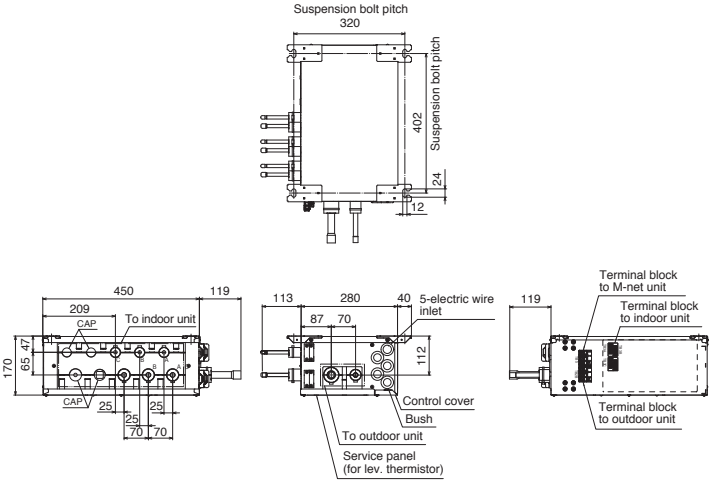


Suspension bolt : W3/8(M10)

Refrigerant pipe brazed connection

| | A | B | C | | | To outdoor unit |
|---|---|---|---|---|---|---|
| Liquid pipe | ø6.35 | ø6.35 | ø6.35 | | | ø9.52 |
| Gas pipe | ø9.52 | ø9.52 | ø9.52 | | | ø15.88 |

# Piping Installation

## M SERIES

### Single type

| Series | Class <Outdoor unit> | Maximum Piping Length (m) | Maximum Height Difference (m) | Maximum Number of Bends |
|---|---|---|---|---|
| | | Total length (A) | Outdoor unit - Indoor unit (H) | Total number |
| MSZ-L | 25 / 35 | 20 | 12 | 10 |
| | 50 | 20 | 12 | 10 |
| | 60 | 30 | 15 | 10 |
| MSZ-A | 20 / 25 / 35 / 42 / 50 | 20 | 12 | 10 |
| | 60 / 71 | 30 | 15 | 10 |
| MSZ-F<br>MFZ | 25 / 35 | 20 | 12 | 10 |
| | 50 | 30 | 15 | 10 |
| MSZ-E | 25 / 35 / 42 | 20 | 12 | 10 |
| | 50 | 30 | 15 | 10 |
| MSZ-S | 25 / 35 / 42 | 20 | 12 | 10 |
| | 50 / 60 | 30 | 15 | 10 |
| MSZ-G | 60 / 71 | 30 | 15 | 10 |
| MSZ-W<br>MSZ-D | 25 / 35 | 20 | 12 | 10 |
| MSY-TP | 35 / 50 | 20 | 12 | 10 |
| MSZ-HJ | 25 / 35 / 50 | 20 | 12 | 10 |
| | 60 / 71 | 30 | 15 | 10 |
| MSZ-HR | 25 / 35 / 42 / 50 | 20 | 12 | 10 |
| | 60 / 71 | 30 | 15 | 10 |

## S SERIES & P SERIES

### Single type

| Series | Class <Outdoor unit> | Maximum Piping Length (m) | Maximum Height Difference (m) | Maximum Number of Bends |
|---|---|---|---|---|
| | | Total length (A) | Outdoor unit - Indoor unit (H) | Total number |
| ZUBADAN (PUHZ-SHW) | 80 / 112 / 140 | 75 | 30 | 15 |
| Power Inverter (PUZ-ZM) | 35 / 50 | 50 | 30 | 15 |
| | 60 / 71 | 55 | 30 | 15 |
| | 100 / 125 / 140 | 100 | 30 | 15 |
| Power Inverter (PUHZ-ZRP) | 35 / 50 / 60 / 71 | 50 | 30 | 15 |
| | 100 / 125 / 140 | 75 | 30 | 15 |
| | 200 / 250 | 100 | 30 | 15 |
| Standard Inverter (PUZ-M & SUZ-M) | 25 / 35 | 20 | 12 | 10 |
| | 50 / 60 / 71 | 30 | 30 | 10 |
| | 100 | 55 | 30 | 15 |
| | 125 / 140 | 65 | | |
| Standard Inverter (PUHZ-P & SUZ-KA) | 25 / 35 | 20 | 12 | 10 |
| | 50 / 60 / 71 | 30 | 30 | 10 |
| | 100 / 125 / 140 | 50 | 30 | 15 |
| | 200 / 250 | 70 | 30 | 15 |

### Twin type

| Series | Class <Outdoor unit> | Maximum Piping Length (m) | | | Maximum Height Difference (m) | | Maximum Number of Bends |
|---|---|---|---|---|---|---|---|
| | | Total length A+B+C | Pipe length difference from distribution pipe \|B-C\| | Indoor unit - Distribution pipe B | Outdoor unit - Indoor unit H | Indoor unit - Indoor unit h | Total number |
| ZUBADAN (PUHZ-SHW) | 80 / 112 / 140 | 75 | 8 | 20 | 30 | 1 | 15 |
| Power Inverter (PUZ-ZM) | 71 | 55 | 8 | 20 | 30 | 1 | 15 |
| | 100 / 125 / 140 | 100 | 8 | 20 | 30 | 1 | 15 |
| | 200 / 250 | | | | | | |
| Power Inverter (PUHZ-ZRP) | 71 | 50 | 8 | 20 | 30 | 1 | 15 |
| | 100 / 125 / 140 | 75 | 8 | 20 | 30 | 1 | 15 |
| | 200 / 250 | 100 | 8 | 30 | 30 | 1 | 15 |
| Standard Inverter (PUZ-M) | 100 | 55 | 8 | 20 | 30 | 1 | 15 |
| | 125 / 140 | 65 | | | | | |
| | 200 / 250 | | | | | | |
| Standard Inverter (PUHZ-P) | 100 / 125 / 140 | 50 | 8 | 20 | 30 | 1 | 15 |
| | 200 / 250 | 70 | 8 | 30 | 30 | 1 | 15 |

### Triple type

| Series | Class <Outdoor unit> | Maximum Piping Length (m) | | | Maximum Height Difference (m) | | Maximum Number of Bends |
|---|---|---|---|---|---|---|---|
| | | Total length A+B+C+D | Pipe length difference from distribution pipe \|B-C\| | Indoor unit - Distribution pipe B | Outdoor unit - Indoor unit H | Indoor unit - Indoor unit h | Total number |
| Power Inverter (PUZ-ZM) | 140 | 100 | 8 | 20 | 30 | 1 | 15 |
| | 200 / 250 | | | | | | |
| Power Inverter (PUHZ-ZRP) | 140 | 75 | 8 | 20 | 30 | 1 | 15 |
| | 200 / 250 | 100 | 8 | 30 | 30 | 1 | 15 |
| Standard Inverter (PUZ-M) | 140 | 65 | 8 | 20 | 30 | 1 | 15 |
| | 200 / 250 | | | | | | |
| Standard Inverter (PUHZ-P) | 140 | 50 | 8 | 20 | 30 | 1 | 15 |
| | 200 / 250 | 70 | 8 | 28 | 30 | 1 | 15 |

### Quadruple type

| Series | Class <Outdoor unit> | Maximum Piping Length (m) | | | Maximum Height Difference (m) | | Maximum Number of Bends |
|---|---|---|---|---|---|---|---|
| | | Total length A+B+C+D+E | Pipe length difference from distribution pipe \|B-C\| | Indoor unit - Distribution pipe B | Outdoor unit - Indoor unit H | Indoor unit - Indoor unit h | Total number |
| Power Inverter (PUZ-ZM, PUHZ-ZRP) | 200 / 250 | 100 | 8 | 30 | 30 | 1 | 15 |
| Standard Inverter (PUZ-M, PUHZ-P) | 200 / 250 | 70 | 8 | 22 | 30 | 1 | 15 |

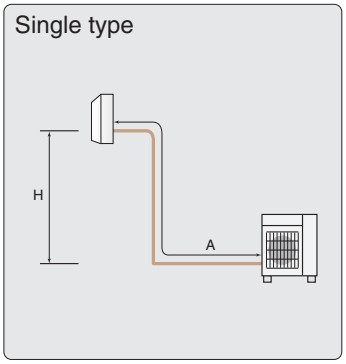


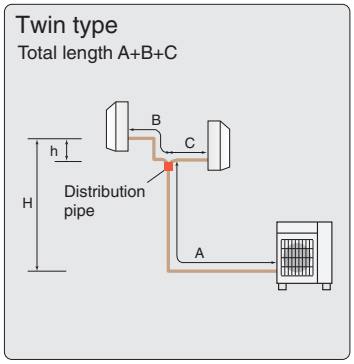


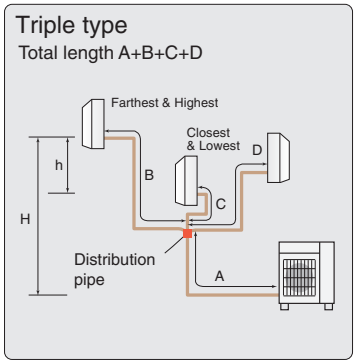


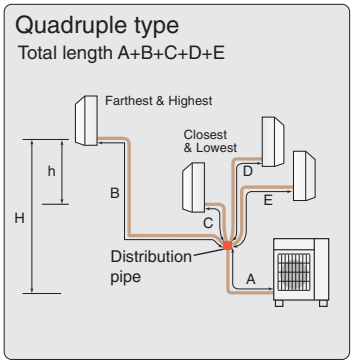


## MXZ SERIES

MXZ-2D33VA, MXZ-2F33VF3

| Maximum Piping Length | |
|---|---|
| Outdoor unit - Indoor unit (a,b) | 15m |
| Total length (a+b) | 20m |

| Maximum Number of Bends | |
|---|---|
| Outdoor unit - Indoor unit (a,b) | 15 |
| Total number (a+b) | 20 |

* When connecting MFZ-KJ Series indoor unit, additional refrigerant is required. For details, please contact Mitsubishi Electric.

Regarding MXZ-2D33, the second unit should be a different type in the case of selecting one MFZ-KJ.

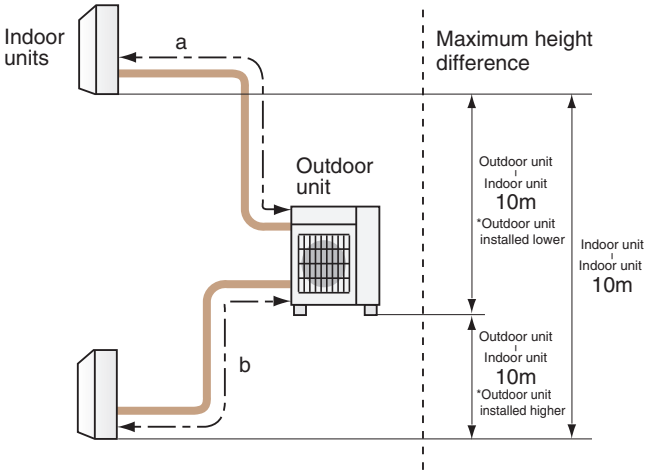


MXZ-2D42VA2, MXZ-2F42VF3

| Maximum Piping Length | |
|---|---|
| Outdoor unit - Indoor unit (a,b) | 20m |
| Total length (a+b) | 30m |

| Maximum Number of Bends | |
|---|---|
| Outdoor unit - Indoor unit (a,b) | 20 |
| Total number (a+b) | 30 |

MXZ-2D53VA(H)2, MXZ-2E53VAHZ, MXZ-2F53VF(H)3

| Maximum Piping Length | |
|---|---|
| Outdoor unit - Indoor unit (a,b) | 20m |
| Total length (a+b) | 30m |

| Maximum Number of Bends | |
|---|---|
| Outdoor unit - Indoor unit (a,b) | 20 |
| Total number (a+b) | 30 |

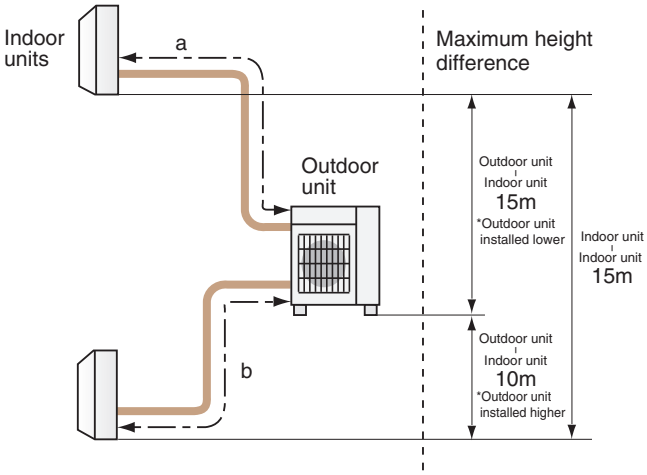


* When connecting MFZ-KJ Series indoor unit to MXZ-2D42VA2 or MXZ-2D53VA(H)2, additional refrigerant is required. For details, please contact Mitsubishi Electric.

## MXZ SERIES

MXZ-2DM40VA, MXZ-2HA40VF, MXZ-2HA50VF

| Maximum Piping Length | |
|---|---|
| Outdoor unit - Indoor unit (a,b) | 20m |
| Total length (a+b) | 30m |

| Maximum Number of Bends | |
|---|---|
| Outdoor unit - Indoor unit (a,b) | 20 |
| Total number (a+b) | 30 |

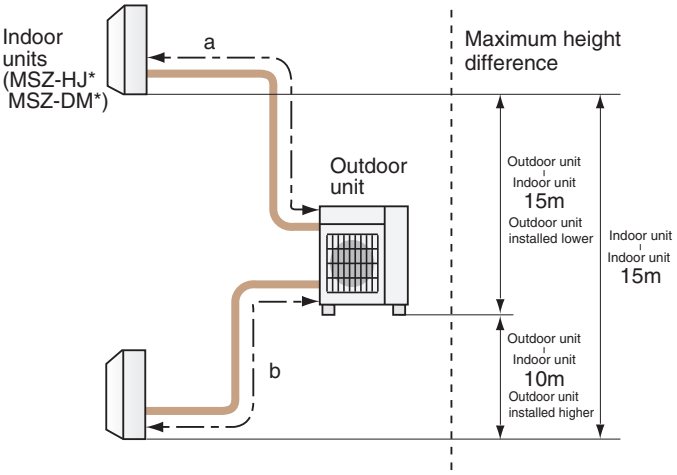


* Only MSZ-HJ and DM model is connectable.

MXZ-3DM50VA, MXZ-3HA50VF

| Maximum Piping Length | |
|---|---|
| Outdoor unit - Indoor unit (a,b,c) | 25m |
| Total length (a+b+c) | 50m |

| Maximum Number of Bends | |
|---|---|
| Outdoor unit - Indoor unit (a,b,c) | 25 |
| Total number (a+b+c) | 50 |

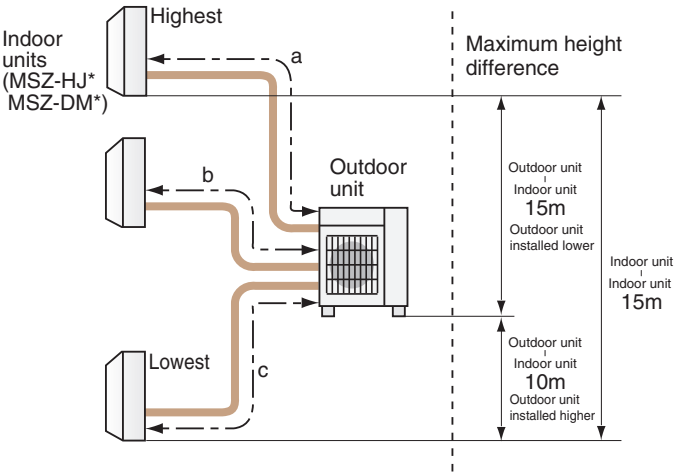


* Only MSZ-HJ and DM model is connectable.

MXZ-4E72VA, MXZ-4F72VF3

| Maximum Piping Length | |
|---|---|
| Outdoor unit - Indoor unit (a,b,c,d) | 25m |
| Total length (a+b+c+d) | 60m |

| Maximum Number of Bends | |
|---|---|
| Outdoor unit - Indoor unit (a,b,c,d) | 25 |
| Total number (a+b+c+d) | 60 |

* When connecting MFZ-KJ Series indoor unit, additional refrigerant is required. For details, please contact Mitsubishi Electric.

MXZ-4E83VA, MXZ-4E83VAHZ

| Maximum Piping Length | |
|---|---|
| Outdoor unit - Indoor unit (a,b,c,d) | 25m |
| Total length (a+b+c+d) | 70m |

| Maximum Number of Bends | |
|---|---|
| Outdoor unit - Indoor unit (a,b,c,d) | 25 |
| Total number (a+b+c+d) | 70 |

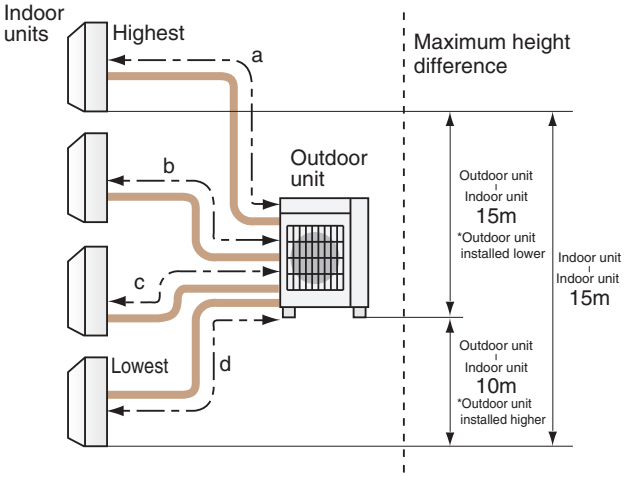

MXZ-5E102VA

| Maximum Piping Length | |
|---|---|
| Outdoor unit - Indoor unit (a,b,c,d,e) | 25m |
| Total length (a+b+c+d+e) | 80m |

| Maximum Number of Bends | |
|---|---|
| Outdoor unit - Indoor unit (a,b,c,d,e) | 25 |
| Total number (a+b+c+d+e) | 80 |

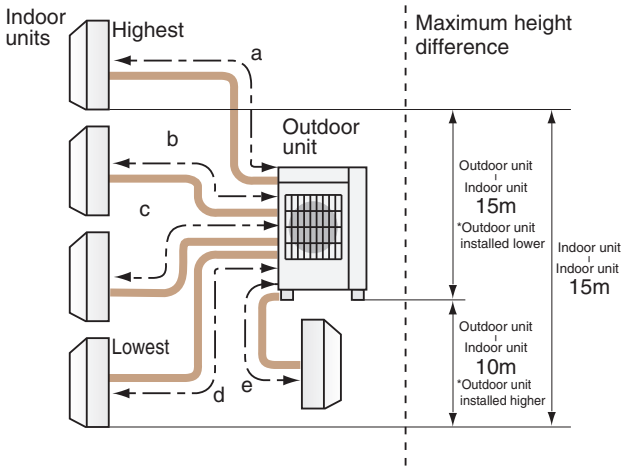


MXZ-6D122VA2

| Maximum Piping Length | |
|---|---|
| Outdoor unit - Indoor unit (a,b,c,d,e,f) | 25m |
| Total length (a+b+c+d+e+f) | 80m |

| Maximum Number of Bends | |
|---|---|
| Outdoor unit - Indoor unit (a,b,c,d,e,f) | 25 |
| Total number (a+b+c+d+e+f) | 80 |

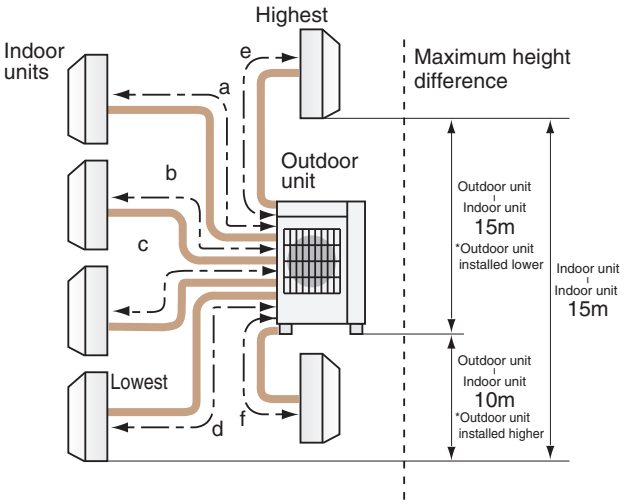

## PUMY-SP112/125/140V(Y)KM

### 1-Branch box

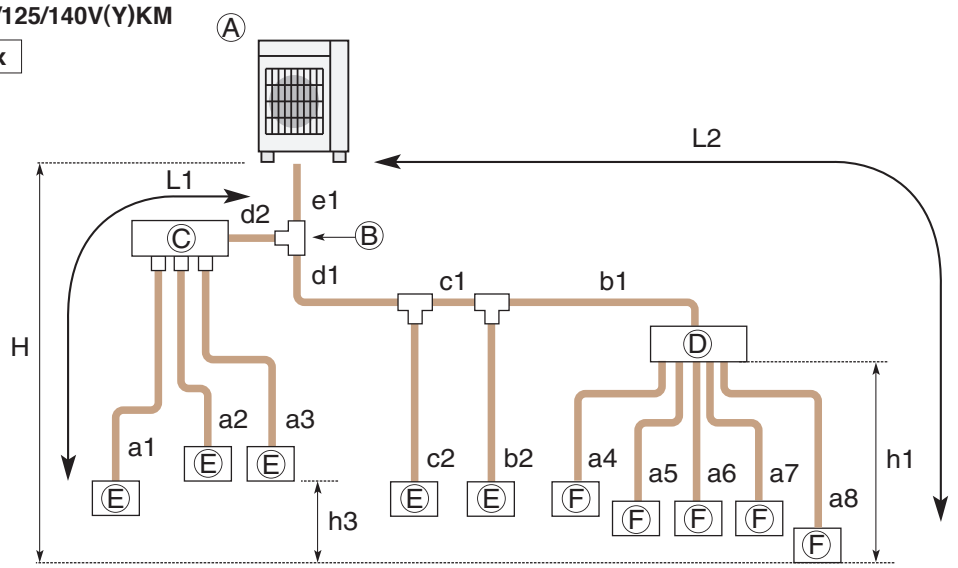


Ⓐ Outdoor Unit
Ⓑ First joint (CMY, MSDD)
Ⓒ Branch header (CMY)
Ⓓ Branch box (PAC-MK•BC(B))
Ⓔ CITY MULTI Indoor unit
Ⓕ M/S/P series Indoor unit

| | | |
|---|---|---|
| Permissible length (One-way) | Total piping length | e1 + d1 + d2 + c1 + c2 + b1 + b2 + a1 + a2 + a3 + a4 + a5 + a6 + a7 + a8 ≦ 120 m |
| | Farthest piping length (L1) | e1 + d2 + a1 or e1 + d1 + c1 + b2 ≦ 70 m |
| | Farthest piping length. Via Branch box (L2) | e1 + d1 + c1 + b1 + a8 ≦ 50 m |
| | Piping length between outdoor unit and branch box | e1 + d1 + c1 + b1 ≦ 55 m |
| | Farthest piping length from the first joint | d1 + c1 + b1 or d1 + c1 + b2 ≦ 50 m |
| | Farthest piping length after branch box | a8 ≦ 25 m |
| | Total piping length between branch boxes and indoor units | a4 + a5 + a6 + a7 + a8 ≦ 95 m |
| Permissible height difference (One-way) | In indoor/outdoor section (H)*1 | H ≦ 50 m (In case of outdoor unit is set higher than indoor unit) |
| | | H ≦ 30 m (In case of outdoor unit is set lower than indoor unit) |
| | In branch box/indoor unit section (h1) | h1 ≦ 15 m |
| | In each indoor unit (h3) | h3 ≦ 12 m |
| Number of bends | | le1 + d2 + a1l, le1 + d2 + a2l, le1 + d2 + a3l, le1 + d1 + c2l, le1 + d1 + c1 + b2l, le1 + d1 + c1 + b1 + a4l, le1 + d1 + c1 + b1 + a5l, le1 + d1 + c1 + b1 + a6l, le1 + d1 + c1 + b1 + a7l, le1 + d1 + c1 + b1 + a8l ≦ 15 |

*1: Branch box should be placed within the level between the outdoor unit and indoor units.

### 2-Branch boxes

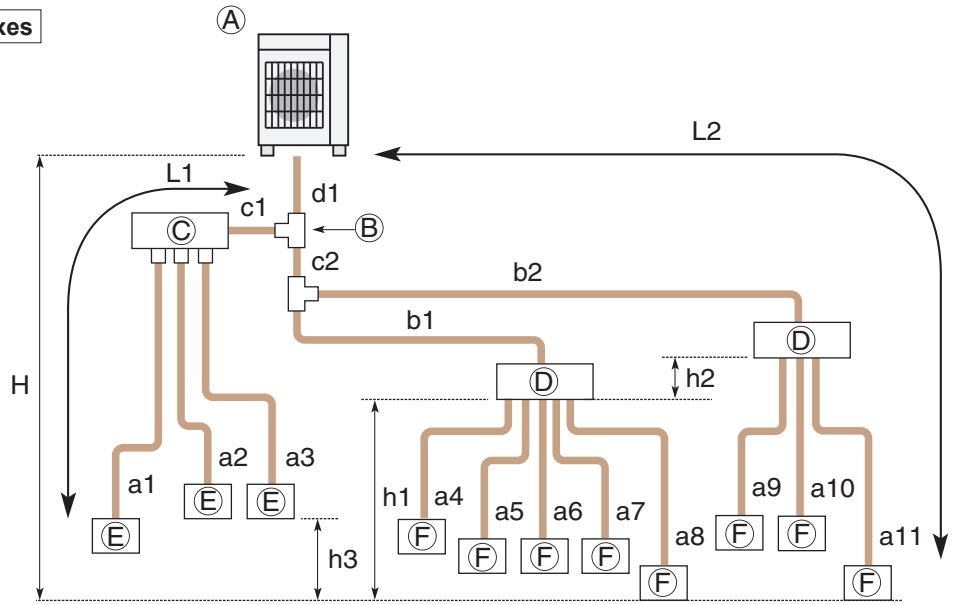


Ⓐ Outdoor Unit
Ⓑ First joint (CMY, MSDD)
Ⓒ Branch header (CMY)
Ⓓ Branch box (PAC-MK•BC(B))
Ⓔ CITY MULTI Indoor unit
Ⓕ M/S/P series Indoor unit

| | | |
|---|---|---|
| Permissible length (One-way) | Total piping length | d1 + c1 + c2 + b1 + b2 + a1 + a2 + a3 + a4 + a5 + a6 + a7 + a8 + a9 + a10 + a11 ≦ 120 m |
| | Farthest piping length (L1) | d1 + c1 + a1 ≦ 70 m |
| | Farthest piping length. Via Branch box (L2) | d1 + c2 + b2 + a11 ≦ 80 m |
| | Piping length between outdoor unit and branch boxes | d1 + c2 + b1 + b2 ≦ 55 m |
| | Farthest piping length from the first joint | c2 + b2 or c1 + a1 ≦ 50 m |
| | Farthest piping length after branch box | a11 ≦ 25 m |
| | Farthest branch box from outdoor unit | d1 + c2 + b2 ≦ 55 m |
| | Total piping length between branch boxes and indoor units | a4 + a5 + a6 + a7 + a8 + a9 + a10 + a11 ≦ 95 m |
| Permissible height difference (One-way) | In indoor/outdoor section (H)*1 | H ≦ 50 m (In case of outdoor unit is set higher than indoor unit) |
| | | H ≦ 30 m (In case of outdoor unit is set lower than indoor unit) |
| | In branch box/indoor unit section (h1) | h1 + h2 ≦ 15 m |
| | In each branch unit (h2) | h2 ≦ 15 m |
| | In each indoor unit (h3) | h3 ≦ 12 m |
| Number of bends | | ld1 + c1 + a1l, ld1 + c1 + a2l, ld1 + c1 + a3l, ld1 + c2 + b1 + a4l, ld1 + c2 + b1 + a5l, ld1 + c2 + b1 + a6l, ld1 + c2 + b1 + a7l, ld1 + c2 + b1 + a8l, ld1 + c2 + b2 + a9l, ld1 + c2 + b2 + a10l, ld1 + c2 + b2 + a11l ≦ 15 |

*1: Branch box should be placed within the level between the outdoor unit and indoor units.

## PUMY-P112/125/140V(Y)KM(E)4

### 1-Branch box

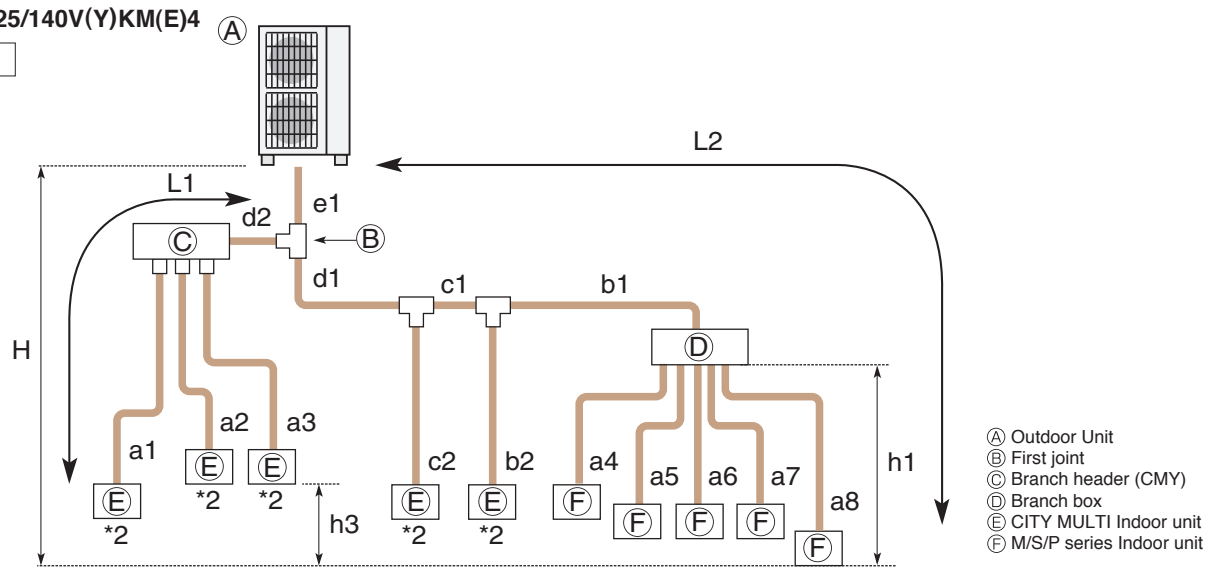


| | | |
|---|---|---|
| Permissible length (One-way) | Total piping length | e1 + d1 + d2 + c1 + c2 + b1 + b2 + a1 + a2 + a3 + a4 + a5 + a6 + a7 + a8 ≦ 300 m |
| | Farthest piping length (L1) | e1 + d2 + a1 or e1 + d1 + c1 + b2 ≦ 85 m |
| | Farthest piping length. Via Branch box (L2) | e1 + d1 + c1 + b1 + a8 ≦ 80 m |
| | Piping length between outdoor unit and branch box | e1 + d1 + c1 + b1 ≦ 55 m |
| | Farthest piping length from the first joint | d1 + c1 + b1 or d1 + c1 + b2 ≦ 30 m |
| | Farthest piping length after branch box | a8 ≦ 25 m |
| | Total piping length between branch boxes and indoor units | a4 + a5 + a6 + a7 + a8 ≦ 95 m |
| Permissible height difference (One-way) | In indoor/outdoor section (H)*1 | H ≦ 50 m (In case of outdoor unit is set higher than indoor unit) |
| | | H ≦ 40 m (In case of outdoor unit is set lower than indoor unit) |
| | In branch box/indoor unit section (h1) | h1 ≦ 15 m |
| | In each indoor unit (h3) | h3 ≦ 12 m |
| Number of bends | | le1 + d2 + a1l, le1 + d2 + a2l, le1 + d2 + a3l, le1 + d1 + c2l, le1 + d1 + c1 + b2l, le1 + d1 + c1 + b1 + a4l, le1 + d1 + c1 + b1 + a5l, le1 + d1 + c1 + b1 + a6l, le1 + d1 + c1 + b1 + a7l, le1 + d1 + c1 + b1 + a8l ≦ 15 |

*1: Branch box should be placed within the level between the outdoor unit and indoor units.
*2: PKFY and PFFY Series cannot be connected.

### 2-Branch boxes

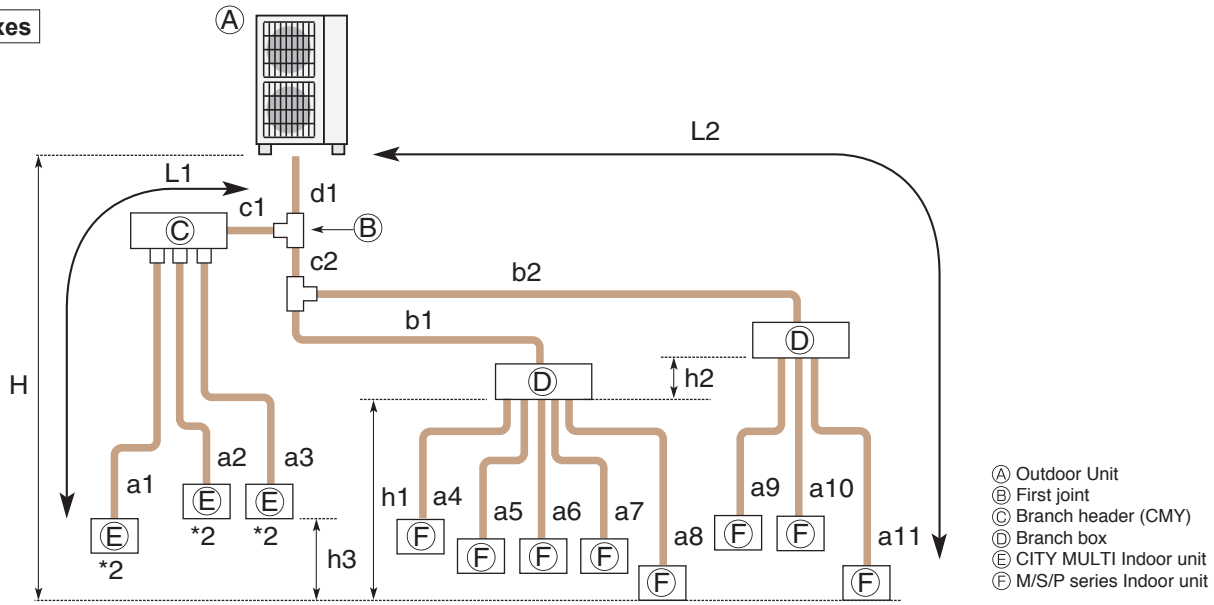


| | | |
|---|---|---|
| Permissible length (One-way) | Total piping length | d1 + c1 + c2 + b1 + b2 + a1 + a2 + a3 + a4 + a5 + a6 + a7 + a8 + a9 + a10 + a11 ≦ 240 m |
| | Farthest piping length (L1) | d1 + c1 + a1 ≦ 85 m |
| | Farthest piping length. Via Branch box (L2) | d1 + c2 + b2 + a11 ≦ 80 m |
| | Piping length between outdoor unit and branch boxes | d1 + c2 + b1 + b2 ≦ 55 m |
| | Farthest piping length from the first joint | c2 + b2 or c1 + a1 ≦ 30 m |
| | Farthest piping length after branch box | a11 ≦ 25 m |
| | Farthest branch box from outdoor unit | d1 + c2 + b2 ≦ 55 m |
| | Total piping length between branch boxes and indoor units | a4 + a5 + a6 + a7 + a8 + a9 + a10 + a11 ≦ 95 m |
| Permissible height difference (One-way) | In indoor/outdoor section (H)*1 | H ≦ 50 m (In case of outdoor unit is set higher than indoor unit) |
| | | H ≦ 40 m (In case of outdoor unit is set lower than indoor unit) |
| | In branch box/indoor unit section (h1) | h1 + h2 ≦ 15 m |
| | In each branch unit (h2) | h2 ≦ 15 m |
| | In each indoor unit (h3) | h3 ≦ 12 m |
| Number of bends | | ld1 + c1 + a1l, ld1 + c1 + a2l, ld1 + c1 + a3l, ld1 + c2 + b1 + a4l, ld1 + c2 + b1 + a5l, ld1 + c2 + b1 + a6l, ld1 + c2 + b1 + a7l, ld1 + c2 + b1 + a8l, ld1 + c2 + b2 + a9l, ld1 + c2 + b2 + a10l, ld1 + c2 + b2 + a11l ≦ 15 |

*1: Branch box should be placed within the level between the outdoor unit and indoor units.
*2: PKFY and PFFY Series cannot be connected.

## PUMY-P200YKM2(-BS)

### 1-Branch box

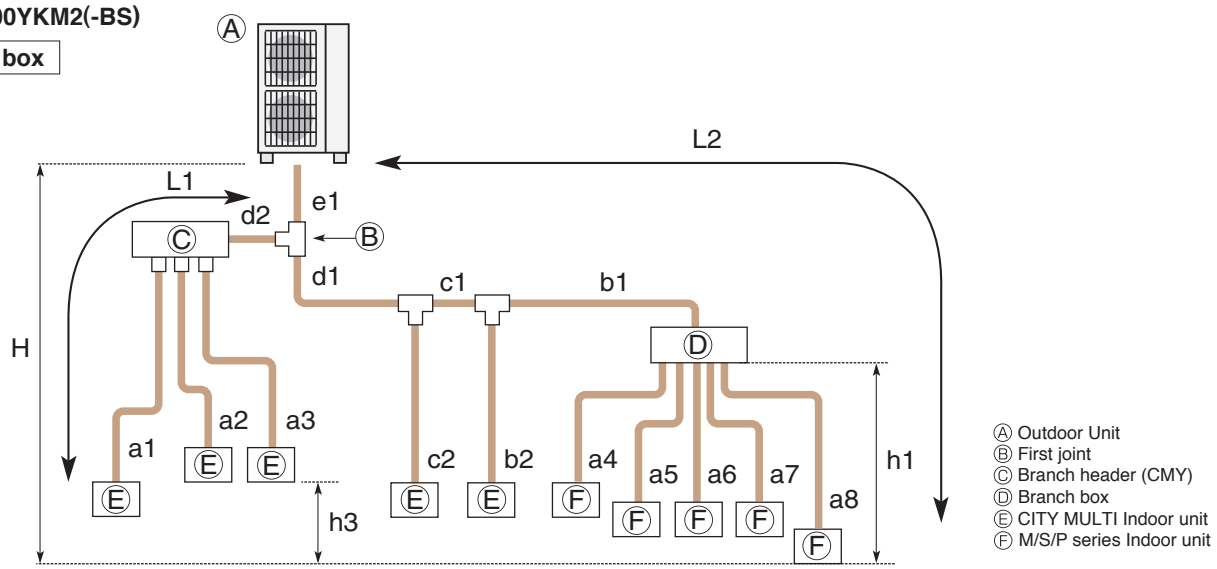


| | | |
|---|---|---|
| Permissible length (One-way) | Total piping length | e1 + d1 + d2 + c1 + c2 + b1 + b2 + a1 + a2 + a3 + a4 + a5 + a6 + a7 + a8 ≦ 150 m |
| | Farthest piping length (L1) | e1 + d2 + a1 or e1 + d1 + c1 + b2 ≦ 80 m |
| | Farthest piping length. Via Branch box (L2) | e1 + d1 + c1 + b1 + a8 ≦ 80 m |
| | Piping length between outdoor unit and branch box | e1 + d1 + c1 + b1 ≦ 55 m |
| | Farthest piping length from the first joint | d1 + c1 + b1 or d1 + c1 + b2 ≦ 30 m |
| | Farthest piping length after branch box | a8 ≦ 25 m |
| | Total piping length between branch boxes and indoor units | a4 + a5 + a6 + a7 + a8 ≦ 95 m |
| Permissible height difference (One-way) | In indoor/outdoor section (H)*1 | H ≦ 50 m (In case of outdoor unit is set higher than indoor unit) |
| | | H ≦ 40 m (In case of outdoor unit is set lower than indoor unit) |
| | In branch box/indoor unit section (h1) | h1 ≦ 15 m |
| | In each indoor unit (h3) | h3 ≦ 12 m |
| Number of bends | | le1 + d2 + a1l, le1 + d2 + a2l, le1 + d2 + a3l, le1 + d1 + c2l, le1 + d1 + c1 + b2l, le1 + d1 + c1 + b1 + a4l, le1 + d1 + c1 + b1 + a5l, le1 + d1 + c1 + b1 + a6l, le1 + d1 + c1 + b1 + a7l, le1 + d1 + c1 + b1 + a8l ≦ 15 |

*1: Branch box should be placed within the level between the outdoor unit and indoor units.

### 2-Branch boxes

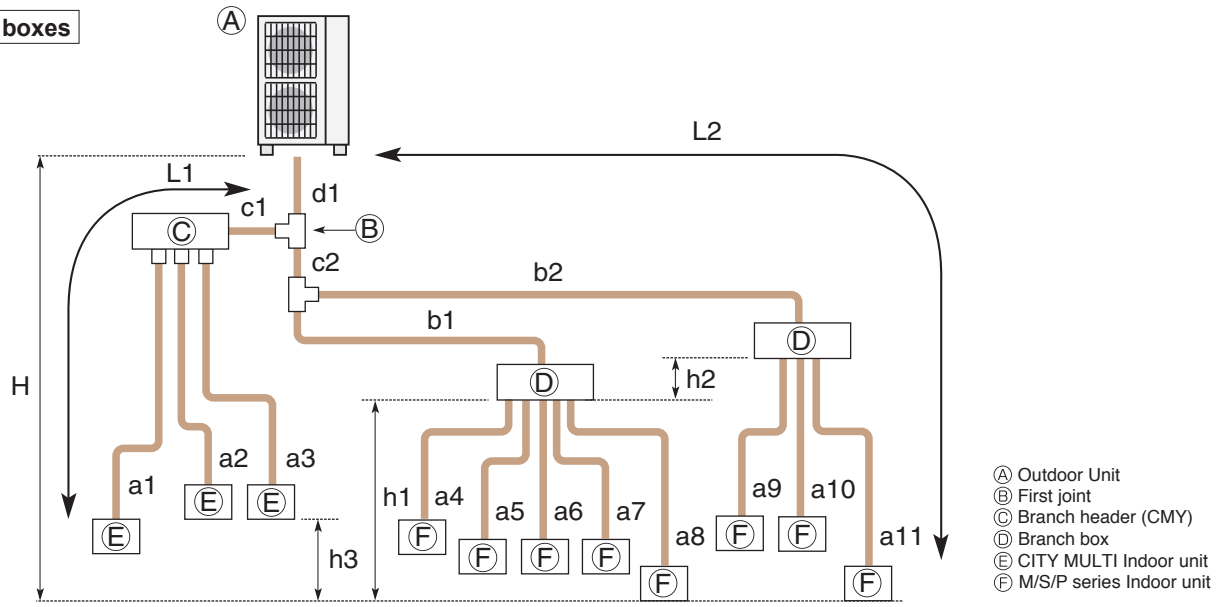


| | | |
|---|---|---|
| Permissible length (One-way) | Total piping length | d1 + c1 + c2 + b1 + b2 + a1 + a2 + a3 + a4 + a5 + a6 + a7 + a8 + a9 + a10 + a11 ≦ 150 m |
| | Farthest piping length (L1) | d1 + c1 + a1 ≦ 80 m |
| | Farthest piping length. Via Branch box (L2) | d1 + c2 + b2 + a11 ≦ 80 m |
| | Piping length between outdoor unit and branch boxes | d1 + c2 + b1 + b2 ≦ 55 m |
| | Farthest piping length from the first joint | c2 + b2 or c1 + a1 ≦ 30 m |
| | Farthest piping length after branch box | a11 ≦ 25 m |
| | Farthest branch box from outdoor unit | d1 + c2 + b2 ≦ 55 m |
| | Total piping length between branch boxes and indoor units | a4 + a5 + a6 + a7 + a8 + a9 + a10 + a11 ≦ 95 m |
| Permissible height difference (One-way) | In indoor/outdoor section (H)*1 | H ≦ 50 m (In case of outdoor unit is set higher than indoor unit) |
| | | H ≦ 40 m (In case of outdoor unit is set lower than indoor unit) |
| | In branch box/indoor unit section (h1) | h1 + h2 ≦ 15 m |
| | In each branch unit (h2) | h2 ≦ 15 m |
| | In each indoor unit (h3) | h3 ≦ 12 m |
| Number of bends | | ld1 + c1 + a1l, ld1 + c1 + a2l, ld1 + c1 + a3l, ld1 + c2 + b1 + a4l, ld1 + c2 + b1 + a5l, ld1 + c2 + b1 + a6l, ld1 + c2 + b1 + a7l, ld1 + c2 + b1 + a8l, ld1 + c2 + b2 + a9l, ld1 + c2 + b2 + a10l, ld1 + c2 + b2 + a11l ≦ 15 |

*1: Branch box should be placed within the level between the outdoor unit and indoor units.

# Explanation of Terminology

**Maximum piping length:**
This is the maximum allowable length of the refrigerant piping. The amount of refrigerant pipe used cannot be longer than the length specified.

**Total length:**
The maximum allowable combined length of all the refrigerant piping between the outdoor unit and indoor unit(s).

**Outdoor Unit - Indoor Unit:**
The maximum allowable length of the refrigerant piping between the outdoor unit and indoor units installed when multiple units are connected to a single outdoor unit. This distance limitation refers to the maximum length between the outdoor unit and the farthest indoor unit.

**Pipe length difference from distribution pipe:**
The maximum allowable difference in refrigerant piping length from the distribution pipe to the farthest indoor unit and from the distribution pipe to the closest indoor unit when multiple indoor units are connected to a single outdoor unit using a distribution pipe.

**Indoor Unit - Distribution Pipe:**
The maximum allowable length of the refrigerant piping between indoor units and the distribution pipe when multiple indoor units are connected to a single outdoor unit.

**Maximum height difference:**
This is the maximum allowable height difference. It is necessary to install the air conditioning system so that the height distance is no more than the difference specified. (Specified differences may vary if the outdoor unit is installed higher or lower than the indoor units).

**Outdoor unit - Indoor unit:**
The maximum allowable difference in height between the outdoor unit and indoor units when installed (when multiple indoor units are connected to a single outdoor unit, this distance limitation refers to the maximum height difference between the outdoor unit and an indoor unit).

**Indoor unit - Indoor unit:**
The maximum allowable difference between the heights of indoor units when multiple indoor units are connected to a single outdoor unit.

**Maximum number of bends:**
This is the maximum allowable number of bends in the refrigerant piping. The total number of bends in the refrigerant piping used cannot exceed the number specified.

**Total number:**
The maximum allowable number of bends for all refrigerant piping between the outdoor unit and indoor units.

**Outdoor unit - Indoor unit:**
The maximum allowable number of bends between the outdoor unit and each indoor unit when multiple indoor units are connected to a single outdoor unit.

# Conditions for specifications

Temperature conditions are based on JIS B8616.

| | | |
|---|---|---|
| Cooling | Indoor | 27˚C DB, 19˚C WB |
| | Outdoor | 35˚C DB, 24˚C WB |
| Heating | Indoor | 20˚C DB |
| | Outdoor | 7˚C DB, 6˚C WB |

Refrigerant piping length ; 5m
The figures for total input are based on the following voltages.

| Series | Indoor unit | Outdoor unit |
|---|---|---|
| M Series<br>S Series<br>P Series (except for PEA)<br>MXZ Series<br>POWERFUL HEATING Series | – | VG,VE,VA,VHA,VKA:230V/Single phase/50Hz<br>YA,YHA,YKA:400V/Three phase/50Hz |
| PEA Series | 400V/Three phase/50Hz | 400V/Three phase/50Hz |

Sound pressure level
• The sound pressure measurement is conducted in an anechoic chamber.
• The actual sound level depends on the distance from the unit and the acoustic environment.

# How to read a model name

## 1) M & S Series

| | |
|---|---|
| M | M : M Series S : S Series |
| S | "S"= Wall-mounted , "F"= Compact floor-standing , "E"= Compact ceiling-concealed ,<br>"L"= 4- or 1-way cassette , "U"= Outdoor unit |
| Z | "Z"= Inverter heat pump , "H"= Fixed-speed heat pump , "blank"= Cooling only of Non-inverter , "Y"= Cooling only of inverter |
| – | |
| F | Series |
| H | Generation |
| 25 | Rated cooling capacity (kW base) |
| V | 230V / Single phase / 50Hz |
| E | "A"= R410A with new A control , "B"= R410A with conventional control ,<br>"E"= R410A with new A control & ErP correspondance , "G"=R32 with new A control & ErP correspondance ,<br>"F"= R32 with new A control |
| HZ | "HZ"= Hyper Heating model , "H"= Anti-freeze heater equipped model ,<br>"S"= Silver indoor unit , "W"= White/Natural White indoor unit , "B"= Black/Onyx Black indoor unit ,<br>"V"= Pearl White indoor unit , "R"= Ruby Red indoor unit |

## 2) P Series

| | |
|---|---|
| P | P Series |
| U | "K"= Wall-mounted , "S"= Floor-standing , "L"= 4-way cassette , "E"= Ceiling-concealed ,<br>"C"= Ceiling-suspended , "U"= Outdoor unit |
| H | "H"= For heating and cooling |
| Z | "Z"= Inverter |
| – | |
| ZM/M/ZRP/RP/P | "ZM"= R32 Eco-conscious Power Inverter , "M"= R32 &R410A<br>"ZRP"/"RP"= R410A & cleaning-free pipe reuse , "P"=R410A |
| SHW | "SH"= Powerful heating ZUBADAN , "W"= can be used as air to water application |
| 71 | Rated cooling capacity (kW base) |
| V | "V"= 230V / Single phase / 50Hz , "Y"= 400V / Three phase / 50Hz |
| H | Generation |
| A | "A"= A control |

## 3) MXZ Series

| | |
|---|---|
| M | M Series |
| X | Multi-system outdoor unit (heat pump) |
| Z | Inverter heat pump |
| – | |
| 4 | Maximum number of connectable indoor units |
| D/E/F/HJ/DM | Generation / Type |
| 72 | Rated cooling capacity (kW base) |
| V | "V"= 230V / Single phase / 50Hz |
| A | "A"= R410A with new A control |
| HZ | "HZ"= Hyper Heating model , "H"= Anti-freeze heater equipped model |

# Refrigerant Amount

## M/S/P/Multi/Zubadan/ATW

| | Model Name | Refrigerant | | Pre-charged quantity | | Max. added quantity | |
|---|---|---|---|---|---|---|---|
| | | | GWP | Weight [kg] | $CO_2$ equivalent [t] | Weight [kg] | $CO_2$ equivalent [t] |
| M-Series | MUZ-LN25VG | R32 | 675 | 1.00 | 0.68 | 0.26 | 0.18 |
| | MUZ-LN25VG2 | R32 | 675 | 0.8 | 0.54 | 0.2 | 0.135 |
| | MUZ-LN35VG | R32 | 675 | 1.00 | 0.68 | 0.26 | 0.18 |
| | MUZ-LN35VG2 | R32 | 675 | 0.85 | 0.57 | 0.2 | 0.135 |
| | MUZ-LN50VG | R32 | 675 | 1.25 | 0.85 | 0.26 | 0.18 |
| | MUZ-LN50VG2 | R32 | 675 | 1.25 | 0.85 | 0.1 | 0.07 |
| | MUZ-LN60VG | R32 | 675 | 1.45 | 0.98 | 0.46 | 0.32 |
| | MUZ-LN25VGHZ | R32 | 675 | 1.00 | 0.68 | 0.26 | 0.18 |
| | MUZ-LN35VGHZ | R32 | 675 | 1.00 | 0.68 | 0.26 | 0.18 |
| | MUZ-LN50VGHZ | R32 | 675 | 1.45 | 0.98 | 0.46 | 0.32 |
| | MUZ-AP20VG | R32 | 675 | 0.55 | 0.37 | 0.26 | 0.18 |
| | MUZ-AP25VG | R32 | 675 | 0.55 | 0.37 | 0.26 | 0.18 |
| | MUZ-AP35VG | R32 | 675 | 0.55 | 0.37 | 0.26 | 0.18 |
| | MUZ-AP42VG | R32 | 675 | 0.70 | 0.47 | 0.26 | 0.18 |
| | MUZ-AP50VG | R32 | 675 | 1.00 | 0.68 | 0.26 | 0.18 |
| | MUZ-AP60VG | R32 | 675 | 1.05 | 0.71 | 0.3 | 0.2 |
| | MUZ-AP71VG | R32 | 675 | 1.50 | 1.02 | 0.3 | 0.2 |
| | MUZ-AP25VGH | R32 | 675 | 0.55 | 0.37 | 0.26 | 0.18 |
| | MUZ-AP35VGH | R32 | 675 | 0.55 | 0.37 | 0.26 | 0.18 |
| | MUZ-AP42VGH | R32 | 675 | 0.70 | 0.47 | 0.26 | 0.18 |
| | MUZ-AP50VGH | R32 | 675 | 1.00 | 0.68 | 0.26 | 0.18 |
| | MUZ-FH25VE | R410A | 2088 | 1.15 | 2.41 | 0.39 | 0.82 |
| | MUZ-FH35VE | R410A | 2088 | 1.15 | 2.41 | 0.39 | 0.82 |
| | MUZ-FH50VE | R410A | 2088 | 1.55 | 3.24 | 0.46 | 0.97 |
| | MUZ-FH25VEHZ | R410A | 2088 | 1.15 | 2.41 | 0.39 | 0.82 |
| | MUZ-FH35VEHZ | R410A | 2088 | 1.15 | 2.41 | 0.39 | 0.82 |
| | MUZ-FH50VEHZ | R410A | 2088 | 1.55 | 3.24 | 0.46 | 0.97 |
| | MUZ-EF25VG(H) | R32 | 675 | 0.62 | 0.42 | 0.26 | 0.18 |
| | MUZ-EF35VG(H) | R32 | 675 | 0.74 | 0.50 | 0.26 | 0.18 |
| | MUZ-EF42VG | R32 | 675 | 0.74 | 0.50 | 0.26 | 0.18 |
| | MUZ-EF50VG | R32 | 675 | 1.05 | 0.71 | 0.46 | 0.32 |
| | MUZ-SF25VE(H) | R410A | 2088 | 0.7 | 1.47 | 0.39 | 0.82 |
| | MUZ-SF35VE(H) | R410A | 2088 | 0.8 | 1.68 | 0.39 | 0.82 |
| | MUZ-SF42VE(H) | R410A | 2088 | 1.15 | 2.41 | 0.39 | 0.82 |
| | MUZ-SF50VE(H) | R410A | 2088 | 1.55 | 3.24 | 0.46 | 0.97 |
| | MUZ-GF60VE | R410A | 2088 | 1.55 | 3.24 | 0.4 | 0.84 |
| | MUZ-GF71VE | R410A | 2088 | 1.9 | 3.97 | 1.1 | 2.30 |
| | MUZ-WN25VA | R410A | 2088 | 0.7 | 1.47 | 0.26 | 0.55 |
| | MUZ-WN35VA | R410A | 2088 | 0.7 | 1.47 | 0.26 | 0.55 |
| | MUZ-BT20VG | R32 | 675 | 0.45 | 0.3 | 0.26 | 0.18 |
| | MUZ-BT25VG | R32 | 675 | 0.5 | 0.34 | 0.26 | 0.18 |
| | MUZ-BT35VG | R32 | 675 | 0.5 | 0.34 | 0.26 | 0.18 |
| | MUZ-BT50VG | R32 | 675 | 0.7 | 0.47 | 0.26 | 0.18 |
| | MUY-TP35VF | R32 | 675 | 0.85 | 0.57 | 0.13 | 0.09 |
| | MUY-TP50VF | R32 | 675 | 0.85 | 0.57 | 0.13 | 0.09 |
| | MUZ-DM25VA | R410A | 2088 | 0.7 | 1.47 | 0.26 | 0.55 |
| | MUZ-DM35VA | R410A | 2088 | 0.72 | 1.51 | 0.26 | 0.55 |
| | MUZ-HJ25VA | R410A | 2088 | 0.7 | 1.47 | 0.26 | 0.55 |
| | MUZ-HJ35VA | R410A | 2088 | 0.72 | 1.51 | 0.26 | 0.55 |
| | MUZ-HJ50VA | R410A | 2088 | 1.15 | 2.41 | 0.26 | 0.55 |
| | MUZ-HJ60VA | R410A | 2088 | 1.8 | 3.76 | 0.46 | 0.97 |
| | MUZ-HJ71VA | R410A | 2088 | 1.8 | 3.76 | 0.46 | 0.97 |
| | MUZ-HR25VF | R32 | 675 | 0.40 | 0.27 | 0.26 | 0.18 |
| | MUZ-HR35VF | R32 | 675 | 0.45 | 0.30 | 0.26 | 0.18 |
| | MUZ-HR42VF | R32 | 675 | 0.70 | 0.47 | 0.26 | 0.18 |
| | MUZ-HR50VF | R32 | 675 | 0.80 | 0.54 | 0.26 | 0.18 |
| | MUZ-HR60VF | R32 | 675 | 1.05 | 0.71 | 0.46 | 0.32 |
| | MUZ-HR71VF | R32 | 675 | 1.05 | 0.71 | 0.46 | 0.32 |
| | MUFZ-KJ25VE | R410A | 2088 | 1.1 | 2.30 | 0.39 | 0.82 |
| | MUFZ-KJ35VE | R410A | 2088 | 1.1 | 2.30 | 0.39 | 0.82 |
| | MUFZ-KJ50VE | R410A | 2088 | 1.5 | 3.14 | 0.46 | 0.97 |
| | MUFZ-KJ25VEHZ | R410A | 2088 | 1.1 | 2.30 | 0.39 | 0.82 |
| | MUFZ-KJ35VEHZ | R410A | 2088 | 1.1 | 2.30 | 0.39 | 0.82 |
| | MUFZ-KJ50VEHZ | R410A | 2088 | 1.5 | 3.14 | 0.46 | 0.97 |
| | MXZ-2D33VA | R410A | 2088 | 1.15 | 2.72 | 0.0 | 0.00 |
| | MXZ-2D42VA2 | R410A | 2088 | 1.3 | 2.72 | 0.2 | 0.42 |
| | MXZ-2D53VA(H)2 | R410A | 2088 | 1.3 | 2.72 | 0.2 | 0.42 |
| | MXZ-3E54VA | R410A | 2088 | 2.7 | 5.64 | 0.2 | 0.42 |
| | MXZ-3E68VA | R410A | 2088 | 2.7 | 5.64 | 0.4 | 0.84 |
| | MXZ-4E72VA | R410A | 2088 | 2.7 | 5.64 | 0.4 | 0.84 |
| | MXZ-4E83VA | R410A | 2088 | 2.99 | 6.25 | 0.9 | 1.88 |
| | MXZ-5E102VA | R410A | 2088 | 2.99 | 6.25 | 1.6 | 3.35 |
| | MXZ-6D122VA | R410A | 2088 | 4.0 | 8.36 | 1.0 | 2.09 |
| | MXZ-2F33VF3 | R32 | 675 | 0.8 | 0.54 | 0.8 | 0.54 |
| | MXZ-2F42VF3 | R32 | 675 | 1.0 | 0.675 | 1.0 | 0.675 |
| | MXZ-2F53VF(H)3 | R32 | 675 | 1.0 | 0.675 | 1.0 | 0.675 |
| | MXZ-3F54VF3 | R32 | 675 | 2.4 | 1.62 | 2.4 | 1.62 |
| | MXZ-3F68VF3 | R32 | 675 | 2.4 | 1.62 | 2.4 | 1.62 |
| | MXZ-4F72VF3 | R32 | 675 | 2.4 | 1.62 | 2.4 | 1.62 |
| | MXZ-4F80VF3 | R32 | 675 | 2.4 | 1.62 | 2.4 | 1.62 |
| | MXZ-2E53VAHZ | R410A | 2088 | 2.0 | 4.18 | 0.2 | 0.42 |
| | MXZ-4E83VAHZ | R410A | 2088 | 3.9 | 8.15 | 0.9 | 1.88 |
| | MXZ-2DM40VA | R410A | 2088 | 0.95 | 1.99 | 0.2 | 0.42 |
| | MXZ-3DM50VA | R410A | 2088 | 2.7 | 5.64 | 0.2 | 0.42 |
| | MXZ-2HA40VF | R32 | 675 | 0.9 | 0.61 | 0.9 | 0.61 |
| | MXZ-2HA50VF | R32 | 675 | 0.9 | 0.61 | 0.9 | 0.61 |
| | MXZ-3HA50VF | R32 | 675 | 1.4 | 0.95 | 1.6 | 1.08 |
| S-Series | SUZ-M25VA | R32 | 675 | 0.65 | 0.44 | 0.91 | 0.61 |
| | SUZ-M35VA | R32 | 675 | 0.9 | 0.61 | 1.16 | 0.78 |
| | SUZ-M50VA | R32 | 675 | 1.2 | 0.81 | 1.66 | 1.12 |
| | SUZ-M60VA | R32 | 675 | 1.25 | 0.84 | 1.71 | 1.15 |
| | SUZ-M71VA | R32 | 675 | 1.45 | 0.98 | 2.37 | 1.60 |
| | SUZ-KA25VA6 | R410A | 2088 | 0.8 | 1.68 | 0.39 | 0.82 |
| | SUZ-KA35VA6 | R410A | 2088 | 1.15 | 2.41 | 0.39 | 0.82 |
| | SUZ-KA50VA6 | R410A | 2088 | 1.6 | 3.35 | 0.46 | 0.97 |
| | SUZ-KA60VA6 | R410A | 2088 | 1.6 | 3.35 | 0.46 | 0.97 |
| | SUZ-KA71VA6 | R410A | 2088 | 1.8 | 3.76 | 1.265 | 2.65 |

| | Model Name | Refrigerant | | Pre-charged quantity | | Max. added quantity | |
|---|---|---|---|---|---|---|---|
| | | | GWP | Weight [kg] | $CO_2$ equivalent [t] | Weight [kg] | $CO_2$ equivalent [t] |
| P-Series | PUZ-ZM35VKA | R32 | 675 | 2.0 | 1.35 | 0.3 | 0.20 |
| | PUZ-ZM50VKA | R32 | 675 | 2.0 | 1.35 | 0.3 | 0.20 |
| | PUZ-ZM60VHA | R32 | 675 | 2.8 | 1.89 | 0.8 | 0.54 |
| | PUZ-ZM71VHA | R32 | 675 | 2.8 | 1.89 | 0.8 | 0.54 |
| | PUZ-ZM100VKA | R32 | 675 | 4.0 | 2.70 | 2.8 | 1.89 |
| | PUZ-ZM100YKA | R32 | 675 | 4.0 | 2.70 | 2.8 | 1.89 |
| | PUZ-ZM125VKA | R32 | 675 | 4.0 | 2.70 | 2.8 | 1.89 |
| | PUZ-ZM125YKA | R32 | 675 | 4.0 | 2.70 | 2.8 | 1.89 |
| | PUZ-ZM140VKA | R32 | 675 | 4.0 | 2.70 | 2.8 | 1.89 |
| | PUZ-ZM140YKA | R32 | 675 | 4.0 | 2.70 | 2.8 | 1.89 |
| | PUZ-ZM200YKA | R32 | 675 | 6.3 | 4.25 | 9.2 | 6.21 |
| | PUZ-ZM250YKA | R32 | 675 | 6.8 | 4.59 | 9.2 | 6.21 |
| | PUHZ-ZRP35VKA2 | R410A | 2088 | 2.2 | 4.60 | 0.4 | 0.84 |
| | PUHZ-ZRP50VKA2 | R410A | 2088 | 2.4 | 5.02 | 0.4 | 0.84 |
| | PUHZ-ZRP60VHA2 | R410A | 2088 | 3.5 | 7.31 | 1.2 | 2.51 |
| | PUHZ-ZRP71VHA2 | R410A | 2088 | 3.5 | 7.31 | 1.2 | 2.51 |
| | PUHZ-ZRP100VKA3 | R410A | 2088 | 5.0 | 10.44 | 2.4 | 5.02 |
| | PUHZ-ZRP100YKA3 | R410A | 2088 | 5.0 | 10.44 | 2.4 | 5.02 |
| | PUHZ-ZRP125VKA3 | R410A | 2088 | 5.0 | 10.44 | 2.4 | 5.02 |
| | PUHZ-ZRP125YKA3 | R410A | 2088 | 5.0 | 10.44 | 2.4 | 5.02 |
| | PUHZ-ZRP140VKA3 | R410A | 2088 | 5.0 | 10.44 | 2.4 | 5.02 |
| | PUHZ-ZRP140YKA3 | R410A | 2088 | 5.0 | 10.44 | 2.4 | 5.02 |
| | PUHZ-ZRP200YKA3 | R410A | 2088 | 7.1 | 14.83 | 3.6 | 7.52 |
| | PUHZ-ZRP250YKA3 | R410A | 2088 | 7.7 | 16.08 | 4.8 | 10.03 |
| | PUZ-M100VKA | R32 | 675 | 3.1 | 2.09 | 4.1 | 2.77 |
| | PUZ-M100YKA | R32 | 675 | 3.1 | 2.09 | 4.1 | 2.77 |
| | PUZ-M125VKA | R32 | 675 | 3.6 | 2.43 | 5.0 | 3.38 |
| | PUZ-M125YKA | R32 | 675 | 3.6 | 2.43 | 5.0 | 3.38 |
| | PUZ-M140VKA | R32 | 675 | 3.6 | 2.43 | 5.0 | 3.38 |
| | PUZ-M140YKA | R32 | 675 | 3.6 | 2.43 | 5.0 | 3.38 |
| | PUZ-M200YKA | R32 | 675 | 5.6 | 3.78 | 7.2 | 4.86 |
| | PUZ-M250YKA | R32 | 675 | 6.8 | 4.59 | 9.2 | 6.21 |
| | PUHZ-P100VKA | R410A | 2088 | 3.3 | 6.89 | 1.2 | 2.51 |
| | PUHZ-P100YKA | R410A | 2088 | 3.3 | 6.89 | 1.2 | 2.51 |
| | PUHZ-P125VKA | R410A | 2088 | 3.8 | 7.93 | 1.2 | 2.51 |
| | PUHZ-P125YKA | R410A | 2088 | 3.8 | 7.93 | 1.2 | 2.51 |
| | PUHZ-P140VKA | R410A | 2088 | 3.8 | 7.93 | 1.2 | 2.51 |
| | PUHZ-P140YKA | R410A | 2088 | 3.8 | 7.93 | 1.2 | 2.51 |
| | PUHZ-P200YKA3 | R410A | 2088 | 6.5 | 13.58 | 3.6 | 7.52 |
| | PUHZ-P250YKA3 | R410A | 2088 | 7.7 | 16.08 | 4.8 | 10.03 |
| | PUHZ-SHW112VHA | R410A | 2088 | 5.5 | 11.49 | 2.4 | 5.02 |
| | PUHZ-SHW112YHA | R410A | 2088 | 5.5 | 11.49 | 2.4 | 5.02 |
| | PUHZ-SHW140VHA | R410A | 2088 | 5.5 | 11.49 | 2.4 | 5.02 |
| | PUHZ-SHW140YHA | R410A | 2088 | 5.5 | 11.49 | 2.4 | 5.02 |
| | PUHZ-FRP71VHA | R410A | 2088 | 3.8 | 7.94 | 1.8 | 3.76 |
| PUMY | PUMY-SP112VKM(-BS) | R410A | 2088 | 3.5 | 7.31 | 9.0 | 18.79 |
| | PUMY-SP112YKM(-BS) | R410A | 2088 | 3.5 | 7.31 | 9.0 | 18.79 |
| | PUMY-SP125VKM(-BS) | R410A | 2088 | 3.5 | 7.31 | 9.0 | 18.79 |
| | PUMY-SP125YKM(-BS) | R410A | 2088 | 3.5 | 7.31 | 9.0 | 18.79 |
| | PUMY-SP140VKM(-BS) | R410A | 2088 | 3.5 | 7.31 | 9.0 | 18.79 |
| | PUMY-SP140YKM(-BS) | R410A | 2088 | 3.5 | 7.31 | 9.0 | 18.79 |
| | PUMY-P112VKM4(-BS) | R410A | 2088 | 4.8 | 10.02 | 13.8 | 28.81 |
| | PUMY-P125VKM4(-BS) | R410A | 2088 | 4.8 | 10.02 | 13.8 | 28.81 |
| | PUMY-P140VKM4(-BS) | R410A | 2088 | 4.8 | 10.02 | 13.8 | 28.81 |
| | PUMY-P112YKM(E)4(-BS) | R410A | 2088 | 4.8 | 10.02 | 13.8 | 28.81 |
| | PUMY-P125YKM(E)4(-BS) | R410A | 2088 | 4.8 | 10.02 | 13.8 | 28.81 |
| | PUMY-P140YKM(E)4(-BS) | R410A | 2088 | 4.8 | 10.02 | 13.8 | 28.81 |
| | PUMY-P200YKM2 (-BS) | R410A | 2088 | 7.3 | 15.24 | 13.1 | 27.35 |
| ATW Packaged | PUZ-WM50VHA | R32 | 675 | 2.0 | 1.35 | – | – |
| | PUZ-WM60VAA | R32 | 675 | 2.2 | 1.49 | – | – |
| | PUZ-WM85V/YAA | R32 | 675 | 2.2 | 1.49 | – | – |
| | PUZ-WM112V/YAA | R32 | 675 | 3.0 | 2.03 | – | – |
| ATW Split | SUZ-SWM40VA | R32 | 675 | 1.2 | 0.81 | 0.4 | 0.27 |
| | SUZ-SWM60VA | R32 | 675 | 1.2 | 0.81 | 0.4 | 0.27 |
| | SUZ-SWM80VA | R32 | 675 | 1.2 | 0.81 | 0.4 | 0.27 |
| | PUD-SWM60VAA | R32 | 675 | 1.3 | 0.8775 | 0.3 | 0.20 |
| | PUD-SWM80V/YAA | R32 | 675 | 1.3 | 0.8775 | 0.3 | 0.20 |
| | PUD-SWM100V/YAA | R32 | 675 | 1.6 | 1.08 | 0.23 | 0.16 |
| | PUD-SWM120V/YAA | R32 | 675 | 1.6 | 1.08 | 0.23 | 0.16 |
| | PUD-SHWM60VAA | R32 | 675 | 1.4 | 0.945 | 0.3 | 0.20 |
| | PUD-SHWM80V/YAA | R32 | 675 | 1.4 | 0.945 | 0.3 | 0.20 |
| | PUD-SHWM100V/YAA | R32 | 675 | 1.7 | 1.1475 | 0.13 | 0.09 |
| | PUD-SHWM120V/YAA | R32 | 675 | 1.7 | 1.1475 | 0.13 | 0.09 |
| | PUD-SHWM140V/YAA | R32 | 675 | 1.7 | 1.1475 | 0.13 | 0.09 |
| | PUHZ-SW75V/YAA | R410A | 2088 | 3.0 | 6.27 | 1.8 | 3.76 |
| | PUHZ-SW100V/YAA | R410A | 2088 | 4.2 | 8.77 | 1.6 | 3.76 |
| | PUHZ-SW120V/YHA | R410A | 2088 | 4.6 | 9.61 | 2.9 | 6.06 |
| | PUHZ-SW160YKA | R410A | 2088 | 7.1 | 14.83 | 4.0 | 8.36 |
| | PUHZ-SW200YKA | R410A | 2088 | 7.7 | 16.08 | 5.2 | 8.36 |
| | PUHZ-SHW80V/YAA | R410A | 2088 | 4.6 | 9.61 | 1.4 | 2.93 |
| | PUHZ-SHW112V/YAA | R410A | 2088 | 4.6 | 9.61 | 1.4 | 2.93 |
| | PUHZ-SHW140YHA | R410A | 2088 | 5.5 | 11.49 | 2.4 | 5.02 |
| | PUHZ-SHW230YKA2 | R410A | 2088 | 7.1 | 14.83 | 8.4 | 17.54 |
| Mr. Slim+ | PUHZ-FRP71VHA2 | R410A | 2088 | 3.8 | 7.94 | 1.8 | 3.76 |

# R32 REFRIGERANT

## R32 REFRIGERANT PROPERTIES

Under the conditions shown below, there is a possibility that R32 could ignite.

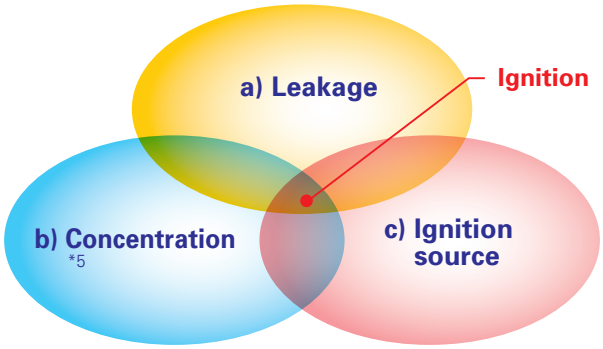


| | R32 | R410A | R22 |
|---|---|---|---|
| Chemical formula | $CH_2F_2$ | $CH_2F_2/CHF_2CF_3$ | $CHClF_2$ |
| Composition (blend ratio wt. %) | Single composition | R32/R125 (50/50 wt %) | Single composition |
| Ozone depletion potential (ODP) | 0 | 0 | 0.055 |
| Global warming potential (GWP) *1 | 675 | 2088 | 1810 |
| LFL(vol.%) *2 | 13.3 | – | – |
| UFL(vol.%) *3 | 29.3 | – | – |
| Flammability *4 | Lower flammability (2L) | No flame propagation (1) | No flame propagation (1) |

*1 IPCC 4th assessment report.
*2 LFL : Lower flammable limit
*3 UFL : Upper flammable limit
*4 ISO 817:2014
*5 R32 consistency is higher than LFL*1 and lower than UFL*2.

Although R32 is classified as low flammability, the possibility of igniting can be eliminated by ensuring the following three points.

### a) Do not leak refrigerant.

<Installation> ·Vacuum drying should be done. Air purging is prohibited.
·Follow "4. Installation Points of Refrigerant Piping Work".
<Repair/Relocation/Removal> ·Pump down or recovering refrigerant should be done.

### b) Prevent concentration.

·Ventilate during installation and servicing, such as open the door or window and use a fan.
·Follow "2. Installation Restrictions".

### c) Keep ignition source away from the unit.

·Do not braze pipe and unit which contain refrigerant. Before brazing, refrigerant should be recovered.
·Do not install unit while the electricity is turned on. Turn off electricity at the fuse box and check the wiring using a tester.
·Do not smoke when working or during transportation of the product.

**Note** **Both R32 / R410A emit a toxic gas when coming into contact with an open flame.**

# INSTALLATION RESTRICTIONS

In order to prevent the refrigerant from igniting, use the following instructions during installation.

## 1) Indoor Units

Install in a room with a floor area of Amin* or more, corresponding to refrigerant quantity M.
(M = factory-charged refrigerant + locally added refrigerant)

Install the indoor unit so that the height from the floor to the bottom of the indoor unit is hO*.

* Refer to table and drawings below.

**<M & P Series>**

| M[kg] | Amin[m²] |
|---|---|
| 1.0 | 4 |
| 1.5 | 6 |
| 2.0 | 8 |
| 2.5 | 10 |
| 3.0 | 12 |
| 3.5 | 14 |
| 4.0 | 16 |
| 4.5 | 20 |
| 5.0 | 24 |
| 5.5 | 29 |
| 6.0 | 35 |
| 6.5 | 41 |
| 7.0 | 47 |
| 7.5 | 54 |

**<MXZ Series>**

| M[kg] | Amin[m²] |
|---|---|
| 1.0 | 3 |
| 1.5 | 4.5 |
| 2.0 | 6 |
| 2.5 | 7.5 |
| 3.0 | 9 |
| 3.5 | 12 |
| 4.0 | 15.5 |
| 4.5 | 20 |
| 5.0 | 24 |
| 5.5 | 29 |
| 6.0 | 35 |
| 6.5 | 41 |
| 7.0 | 47 |
| 7.5 | 54 |

**<Only for MFZ-KT>**

| M[kg] | Amin[m²] |
|---|---|
| 1.00 | No requirements |
| 1.50 | |
| 1.80 | |
| 1.84 | 3.63 |
| 1.90 | 3.75 |
| 2.00 | 3.95 |
| 2.10 | 4.15 |
| 2.20 | 4.34 |
| 2.30 | 4.54 |
| 2.40 | 4.74 |

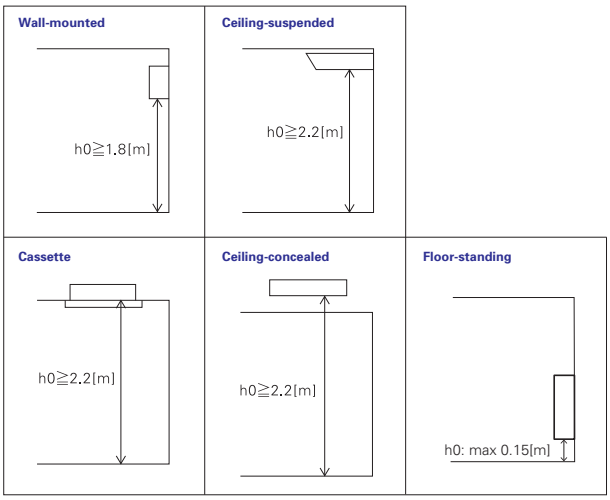


## 2) Outdoor Units

Install outdoor units in a place where at least one of the four sides is open or in a sufficiently large space without depressions.

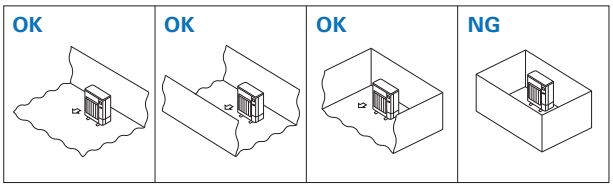


**If you unavoidably install a unit in a space where all four sides are blocked or there are depressions, confirm that one of these situations (A, B or C) is satisfied.**

### A Secure sufficient installation space (minimum installation area Amin).

Install in a space with an installation area of Amin* or more, corresponding to refrigerant quantity M. (M = factory-charged refrigerant + locally added refrigerant)

* Refer to table and drawings below.

| M[kg] | Amin[m²] |
|---|---|
| 1.0 | 12 |
| 1.5 | 17 |
| 2.0 | 23 |
| 2.5 | 28 |
| 3.0 | 34 |
| 3.5 | 39 |
| 4.0 | 45 |
| 4.5 | 50 |
| 5.0 | 56 |
| 5.5 | 62 |
| 6.0 | 67 |
| 6.5 | 73 |
| 7.0 | 78 |
| 7.5 | 84 |

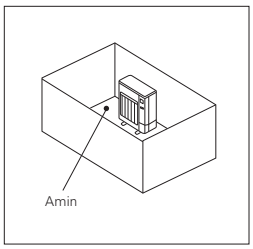


### B Install in a space with a depression height of ≦0.125[m].

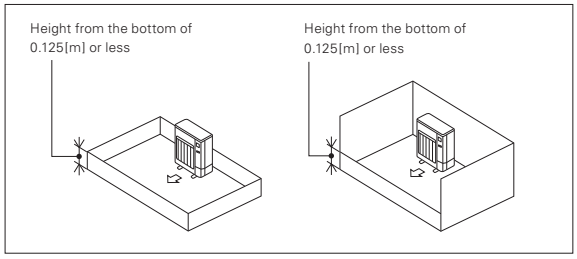


### C Create an appropriate open ventilation area.

Make sure that the width of the open area is 0.9[m] or more and the height of the open area is 0.15[m] or more.
However, the height from the bottom of the installation space to the bottom edge of the open area should be 0.125[m] or less.
More than 75% of the ventilation area should be open to allow air circulation.

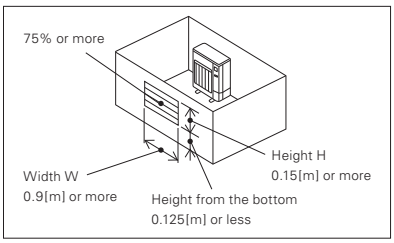


**Note** **These countermeasures (A, B or C) are for keeping safety not for specification guarantee.**

● Models with R32 Refrigerant: MSZ-L Series (single connection)

# LOSSNAY SYSTEM

# LOSSNAY LINEUP

| Application | | Model \ Airflow | 50 CMH | 100 CMH | 150 CMH | 250 CMH | 350 CMH | 500 CMH | 650 CMH | 800 CMH | 1000 CMH | 1500 CMH | 2000 CMH | 2500 CMH |
|---|---|---|---|---|---|---|---|---|---|---|---|---|---|---|
| Commercial Use | Centralized Ventilation | LGH-RVX Series | | | ● | ● | ● | ● | ● | ● | ● | ● | ● | |
| | | LGH-RVXT Series | | | | | | | | | | ● | ● | ● |
| | | GUF Series | | | | | | ● | | | ● | | | |
| | Optional Unit | Dx-coil unit for Lossnay LGH-RVX/RVXT Series GUG Series | | | | | | ● | ● | ● | ● | ● | ● | ● |
| Residential Use | Centralized Ventilation | VL-220CZGV-E | | | | ● | | | | | | | | |
| | Decentralized Ventilation | VL-100(E)U5-E  | | ● | | | | | | | | | | |
| | | VL-50(E)S2-E VL-50SR2-E | ● | | | | | | | | | | | |

## LGH-RVX Series

A commercially oriented system that can be used to deliver high performance and functions virtually anywhere.

## LGH-RVXT Series

Thin, large airflow models of the LGH series that deliver high performance and functions.

## Dx-coil unit (GUG Series)

Temperature control equipment that works with Lossnay units and Mr. Slim outdoor units.

## GUF Series

Heat recovery units with a heating and cooling system that uses the City Multi outdoor unit as a heat source.

## VL-220CZGV-E

Centralized ventilation with sensible heat exchange, for residential use.

## VL-100(E)U5-E, VL-50(E)S2-E, VL-50SR2-E

Wall-mounted models. Particularly suitable for houses and small offices.

# REMOTE CONTROLLER

### PZ-61DR-E

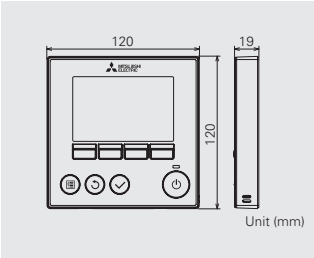


### PZ-43SMF-E

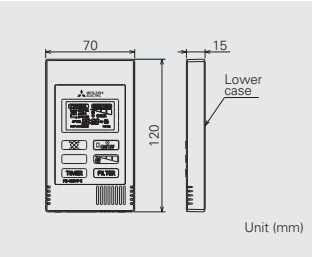


| Function (Communicating mode) | PZ-61DR-E | | PZ-43SMF-E | |
|---|---|---|---|---|
| | LGH-RVX/RVXT | VL-220CZGV-E | LGH-RVX/RVXT | VL-220CZGV-E |
| Fan speed selection | 4 fan speeds | 4 fan speeds | 2 of 4 fan speeds | 2 of 4 fan speeds |
| Ventilation mode selection | Energy recovery / Bypass / Auto | Heat recovery / Bypass / Auto (available with optional part P-133DUE-E) | Energy recovery / Bypass / Auto | Heat recovery / Bypass / Auto (available with optional part P-133DUE-E) |
| Night-purge setting (time and fan speed) | Yes | No | No | No |
| Function setting from RC | Yes | Yes | No | No |
| Bypass temp. free setting | Yes | Yes (available with optional part P-133DUE-E) | No | No |
| Heater-On temp. free setting | Yes | No | No | No |
| Fan power change after installation | Yes | Yes | No | No |
| ON/OFF timer | Yes | Yes | Yes | Yes |
| Auto-Off timer | Yes | Yes | No | No |
| Weekly timer | Yes | Yes | No | No |
| Operation restrictions (ON/OFF, ventilation mode, fan speed) | Yes | Yes (ventilation mode is available with optional part P-133DUE-E) | No | No |
| Operation restrictions (fan speed skip setting) | Yes | Yes | No | No |
| Screen contrast adjustment | Yes | Yes | No | No |
| Language selection | Yes (8 languages) | Yes (8 languages) | No (English only) | No (English only) |
| Initializing | Yes | Yes | No | No |
| Filter cleaning sign | Yes | Yes | Yes | Yes |
| Lossnay core cleaning sign | Yes | No | No | No |
| Error indication | Yes | Yes | Yes | Yes |
| Error history | Yes | Yes | No | No |

# LOSSNAY SYSTEM

Lossnay ventilation systems are renowned industry-wide for their efficiency. They offer environment-friendly energy recovery and humidity control, and enable air conditioning systems to simultaneously provide optimum room comfort and energy savings.

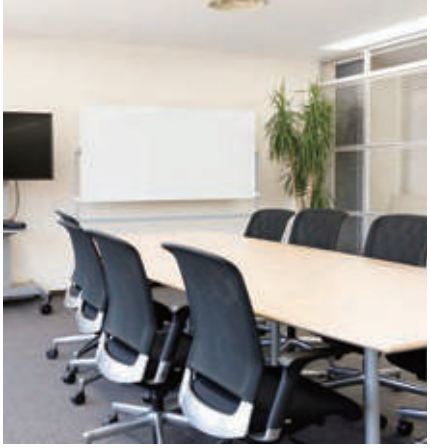

## Indoor Air Quality Inside a Building is Optimized Through Temperature and Humidity Exchange by Lossnay

Lossnay is a total heat exchange ventilation system that uses paper characteristics to perform temperature (sensible heat) and humidity (latent heat) exchange.

● **The concept of sensible heat and latent heat exchange using Lossnay core**

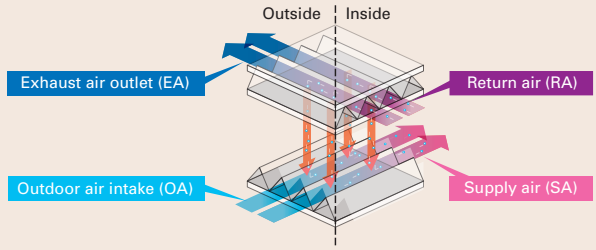


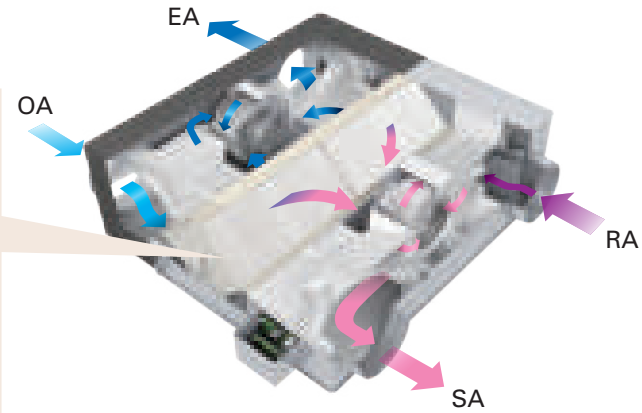


## What Can Be Improved by Introducing Lossnay?

● **Ventilation with maximized comfort**

### In summer

Air similar to the conditions of cooled (dehumidified) indoor air is supplied.

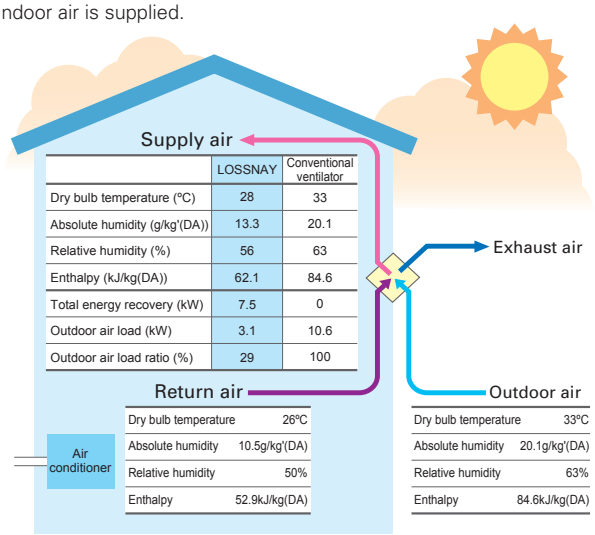


| | LOSSNAY | Conventional ventilator |
|---|---|---|
| Dry bulb temperature (ºC) | 28 | 33 |
| Absolute humidity (g/kg'(DA)) | 13.3 | 20.1 |
| Relative humidity (%) | 56 | 63 |
| Enthalpy (kJ/kg(DA)) | 62.1 | 84.6 |
| Total energy recovery (kW) | 7.5 | 0 |
| Outdoor air load (kW) | 3.1 | 10.6 |
| Outdoor air load ratio (%) | 29 | 100 |

| | |
|---|---|
| Dry bulb temperature | 26ºC |
| Absolute humidity | 10.5g/kg'(DA) |
| Relative humidity | 50% |
| Enthalpy | 52.9kJ/kg(DA) |

| | |
|---|---|
| Dry bulb temperature | 33ºC |
| Absolute humidity | 20.1g/kg'(DA) |
| Relative humidity | 63% |
| Enthalpy | 84.6kJ/kg(DA) |

**Heat recovery calculation**

Indoor supply-air temperature (ºC) = Outdoor temperature (ºC) − (Outdoor temperature (ºC) − Indoor temperature (ºC)) × Temp recovery efficiency (%)

Calculation example: 28ºC = 33ºC – (33ºC – 26ºC) × 71.5%

*The above applies to the case of LGH-100RVX (fan speed 4).

### In winter

Air similar to the conditions of heated (humidified) indoor air is supplied.

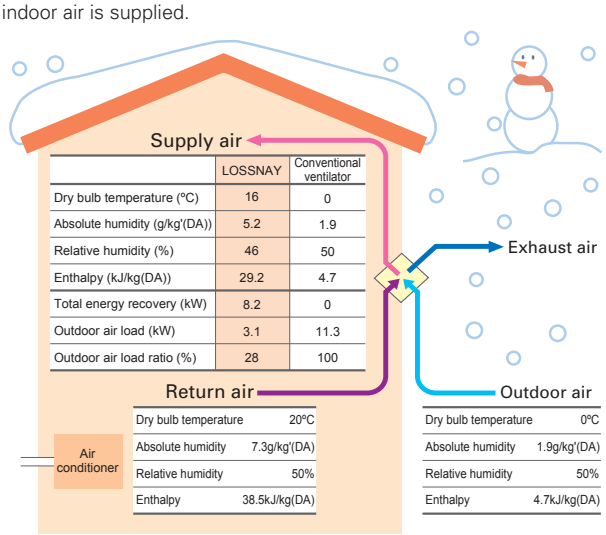


| | LOSSNAY | Conventional ventilator |
|---|---|---|
| Dry bulb temperature (ºC) | 16 | 0 |
| Absolute humidity (g/kg'(DA)) | 5.2 | 1.9 |
| Relative humidity (%) | 46 | 50 |
| Enthalpy (kJ/kg(DA)) | 29.2 | 4.7 |
| Total energy recovery (kW) | 8.2 | 0 |
| Outdoor air load (kW) | 3.1 | 11.3 |
| Outdoor air load ratio (%) | 28 | 100 |

| | |
|---|---|
| Dry bulb temperature | 20ºC |
| Absolute humidity | 7.3g/kg'(DA) |
| Relative humidity | 50% |
| Enthalpy | 38.5kJ/kg(DA) |

| | |
|---|---|
| Dry bulb temperature | 0ºC |
| Absolute humidity | 1.9g/kg'(DA) |
| Relative humidity | 50% |
| Enthalpy | 4.7kJ/kg(DA) |

**Heat recovery calculation**

Indoor supply-air temperature (ºC) = Indoor temperature (ºC) − Outdoor temperature (ºC) × Temp recovery efficiency (%) + Outdoor temperature (ºC)

Calculation example: 16ºC = (20ºC – 0ºC) × 80% + 0ºC

*The above applies to the case of LGH-100RVX (fan speed 4).

# Commercial Use Lossnay

## LGH-RVX Series (Standard model)

### Power consumption reduced further with the introduction of a DC motor

Low power consumption is realised with the introduction of a high efficiency brushless DC motor. Compared to models with an AC motor, power consumption is reduced.

**Comparison between current and previous power consumption**
**(Current model: Fan speed 4 at 230V 50Hz, Previous model: Extra-High at 220V 50Hz)**

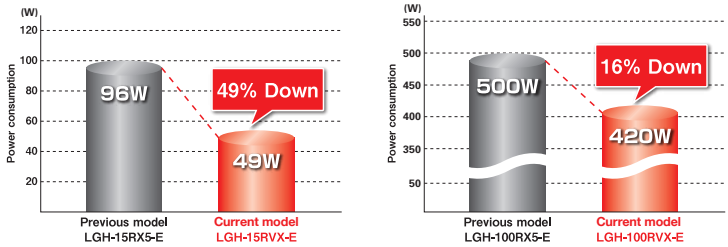


### Improved airflow range

**Wide airflow range**

Each fan speed has a range setting of 25, 50, 75 and 100%, allowing much finer airflow control. When used in combination with the $CO_2$ sensor or timer function, airflow can be controlled according to conditions that realize better performance and reduce power consumption.

**Fan speed adjustment function**

The default fan speed value can be adjusted slightly. Use the PZ-61DR-E remote controller to reset the speed.
1) Considering the total hours of Lossnay operation (filter clogging), fan power can be adjusted automatically after a given period of time.
2) After the unit is installed, fine adjustments can be made if the airflow is slightly lower than the desired airflow.

**■ Characteristic curves of the LGH-RVX/RVXT Series**

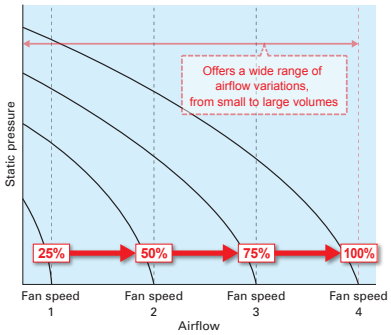


**■ P-Q curve image**

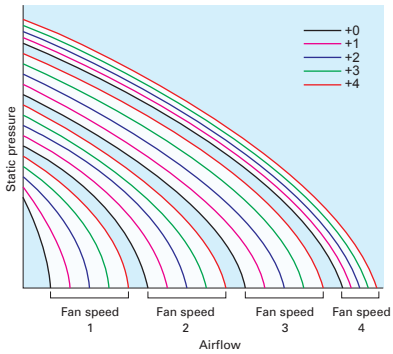


## LGH-RVXT Series (Thin body type)

The LGH-RVXT series has a large airflow of 1500 - 2500 CMH but a thin body of approximately 500mm. Therefore, installing the unit in the ceiling is easy.

**■ LGH-150/200RVX-E**

**Height: 808mm**

**■ LGH-150/200/250RVXT-E**

**Height: 500mm**

**38% Thinner body**

**■ LGH-RVXT installation image**

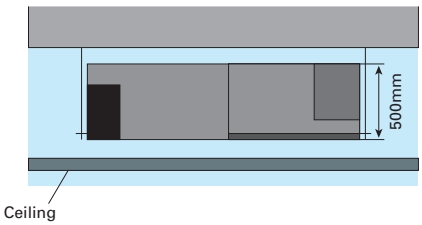


## GUF Series (Lossnay with Dx-coil unit)

Along with Lossnay ventilation, the OA processing unit is really two units in one, functioning as the main air conditioner when the load is light and adding supplemental air conditioning when the load is heavy.

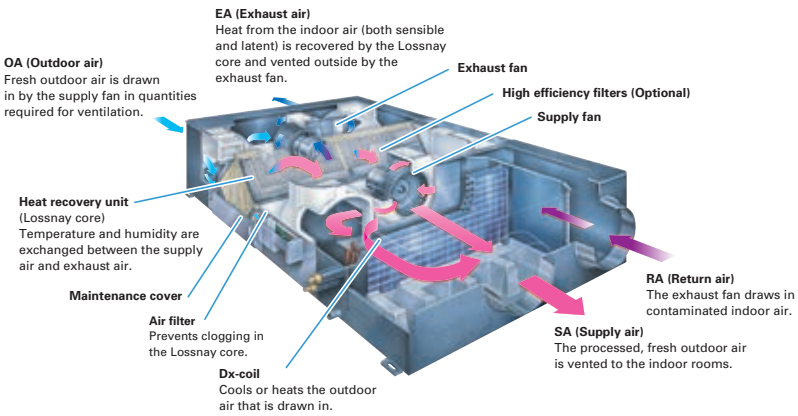

# Commercial Use Lossnay Specifications

## RVX Series

### LGH-15RVX-E

| | | | | | | | | | |
|---|---|---|---|---|---|---|---|---|---|
| Electrical power supply | | 220-240V/50Hz, 220V/60Hz | | | | | | | |
| Ventilation mode | | Heat recovery mode | | | | Bypass mode | | | |
| Fan speed | | SP4 | SP3 | SP2 | SP1 | SP4 | SP3 | SP2 | SP1 |
| Running current (A) | | 0.40 | 0.24 | 0.15 | 0.10 | 0.41 | 0.25 | 0.15 | 0.10 |
| Input power (W) | | 49 | 28 | 14 | 7 | 52 | 28 | 14 | 8 |
| Airflow | ($m^3$/h) | 150 | 113 | 75 | 38 | 150 | 113 | 75 | 38 |
| | (L/s) | 42 | 31 | 21 | 10 | 42 | 31 | 21 | 10 |
| External static pressure (Pa) | | 95 | 54 | 24 | 6 | 95 | 54 | 24 | 6 |
| Temperature exchange efficiency (%) | | 80 | 81 | 83 | 84 | – | – | – | – |
| Enthalpy exchange efficiency (%) | Heating | 73 | 75.5 | 78 | 79 | – | – | – | – |
| | Cooling | 71 | 74.5 | 78 | 79 | – | – | – | – |
| Noise (dB) (Measured at 1.5m under the center of the unit in an anechoic chamber) | | 28 | 24 | 19 | 17 | 29 | 24 | 19 | 18 |
| Weight (kg) | | 20 | | | | | | | |
| Specific energy consumption class | | A | | | | | | | |

### Characteristic Curves

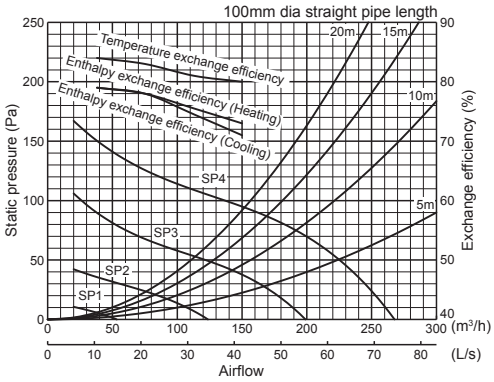


### Dimensions

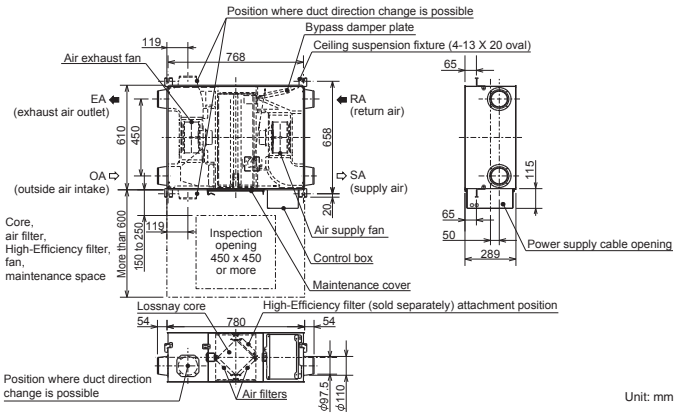


### LGH-25RVX-E

| | | | | | | | | | |
|---|---|---|---|---|---|---|---|---|---|
| Electrical power supply | | 220-240V/50Hz, 220V/60Hz | | | | | | | |
| Ventilation mode | | Heat recovery mode | | | | Bypass mode | | | |
| Fan speed | | SP4 | SP3 | SP2 | SP1 | SP4 | SP3 | SP2 | SP1 |
| Running current (A) | | 0.48 | 0.28 | 0.16 | 0.10 | 0.48 | 0.29 | 0.16 | 0.11 |
| Input power (W) | | 62 | 33 | 16 | 7.5 | 63 | 35 | 17 | 9 |
| Airflow | ($m^3$/h) | 250 | 188 | 125 | 63 | 250 | 188 | 125 | 63 |
| | (L/s) | 69 | 52 | 35 | 17 | 69 | 52 | 35 | 17 |
| External static pressure (Pa) | | 85 | 48 | 21 | 5 | 85 | 48 | 21 | 5 |
| Temperature exchange efficiency (%) | | 79 | 80 | 82 | 86 | – | – | – | – |
| Enthalpy exchange efficiency (%) | Heating | 69.5 | 72 | 76 | 83 | – | – | – | – |
| | Cooling | 68 | 70 | 74.5 | 83 | – | – | – | – |
| Noise (dB) (Measured at 1.5m under the center of the unit in an anechoic chamber) | | 27 | 22 | 20 | 17 | 27.5 | 23 | 20 | 17 |
| Weight (kg) | | 23 | | | | | | | |
| Specific energy consumption class | | A | | | | | | | |

### Characteristic Curves

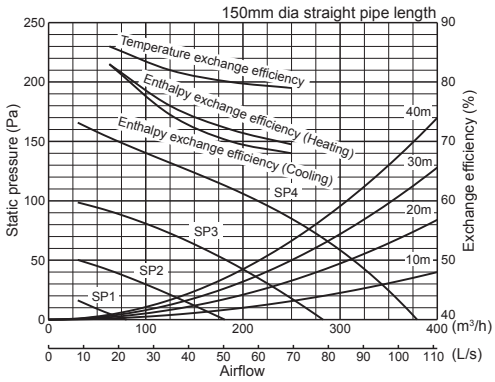


### Dimensions

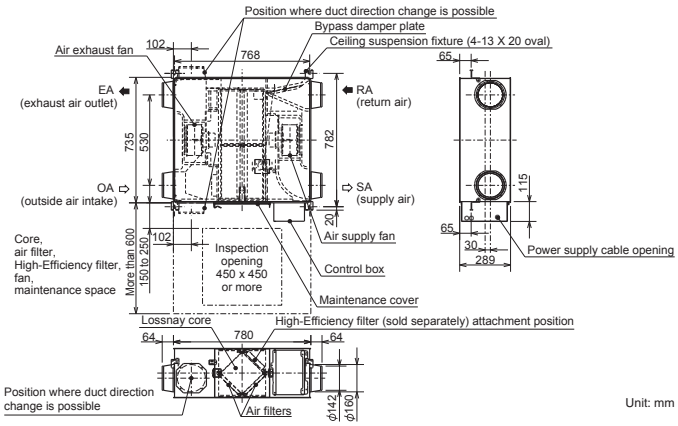


■For LGH-RVX and LGH-RVXT series
*The running current, the input power, the efficiency and the noise are based on the rated airflow, 230V/50Hz, and 220V/60Hz.
*Figures in the chart is measured according to Japan Industrial Standard (JIS B 8628). Characteristic Curves are measured by chamber method.
*For specifications at other frequencies, contact your dealer.

## LGH-35RVX-E

| | | | | | | | | | |
|---|---|---|---|---|---|---|---|---|---|
| Electrical power supply | | 220-240V/50Hz, 220V/60Hz | | | | | | | |
| Ventilation mode | | Heat recovery mode | | | | Bypass mode | | | |
| Fan speed | | SP4 | SP3 | SP2 | SP1 | SP4 | SP3 | SP2 | SP1 |
| Running current (A) | | 0.98 | 0.54 | 0.26 | 0.12 | 0.98 | 0.56 | 0.28 | 0.13 |
| Input power (W) | | 140 | 70 | 31 | 11 | 145 | 72 | 35 | 13 |
| Airflow | ($m^3$/h) | 350 | 263 | 175 | 88 | 350 | 263 | 175 | 88 |
| | (L/s) | 97 | 73 | 49 | 24 | 97 | 73 | 49 | 24 |
| External static pressure (Pa) | | 160 | 90 | 40 | 10 | 160 | 90 | 40 | 10 |
| Temperature exchange efficiency (%) | | 80 | 82.5 | 86 | 88.5 | – | – | – | – |
| Enthalpy exchange efficiency (%) | Heating | 71.5 | 74 | 78.5 | 83.5 | – | – | – | – |
| | Cooling | 71 | 73 | 78 | 82 | – | – | – | – |
| Noise (dB) (Measured at 1.5m under the center of the unit in an anechoic chamber) | | 32 | 28 | 20 | 17 | 32.5 | 28 | 20 | 18 |
| Weight (kg) | | 30 | | | | | | | |

### Characteristic Curves

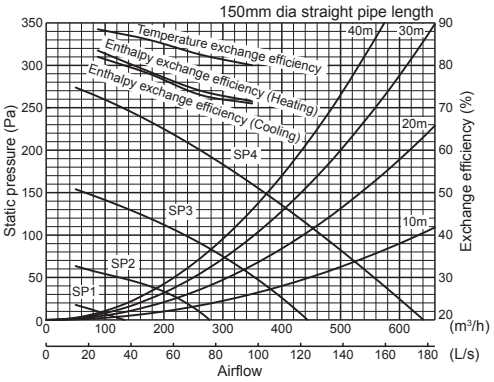


### Dimensions

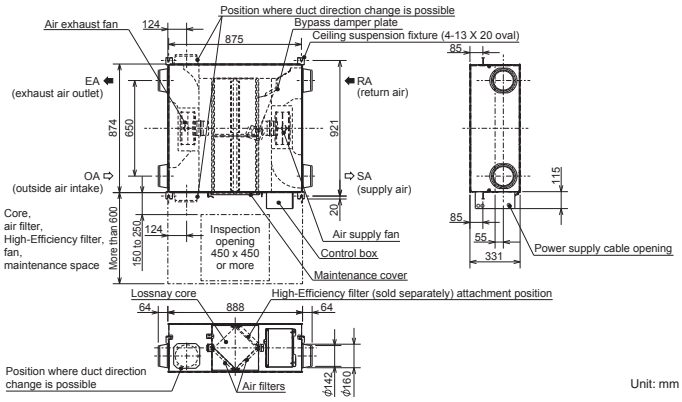


## LGH-50RVX-E

| | | | | | | | | | |
|---|---|---|---|---|---|---|---|---|---|
| Electrical power supply | | 220-240V/50Hz, 220V/60Hz | | | | | | | |
| Ventilation mode | | Heat recovery mode | | | | Bypass mode | | | |
| Fan speed | | SP4 | SP3 | SP2 | SP1 | SP4 | SP3 | SP2 | SP1 |
| Running current (A) | | 1.15 | 0.59 | 0.26 | 0.13 | 1.15 | 0.59 | 0.27 | 0.13 |
| Input power (W) | | 165 | 78 | 32 | 12 | 173 | 81 | 35 | 14 |
| Airflow | ($m^3$/h) | 500 | 375 | 250 | 125 | 500 | 375 | 250 | 125 |
| | (L/s) | 139 | 104 | 69 | 35 | 139 | 104 | 69 | 35 |
| External static pressure (Pa) | | 120 | 68 | 30 | 8 | 120 | 68 | 30 | 8 |
| Temperature exchange efficiency (%) | | 78 | 81 | 83.5 | 87 | – | – | – | – |
| Enthalpy exchange efficiency (%) | Heating | 69 | 71 | 75 | 82.5 | – | – | – | – |
| | Cooling | 66.5 | 68 | 72.5 | 82 | – | – | – | – |
| Noise (dB) (Measured at 1.5m under the center of the unit in an anechoic chamber) | | 34 | 28 | 19 | 18 | 35 | 29 | 20 | 18 |
| Weight (kg) | | 33 | | | | | | | |

### Characteristic Curves

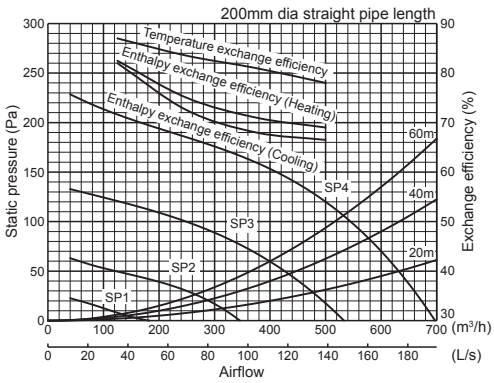


### Dimensions

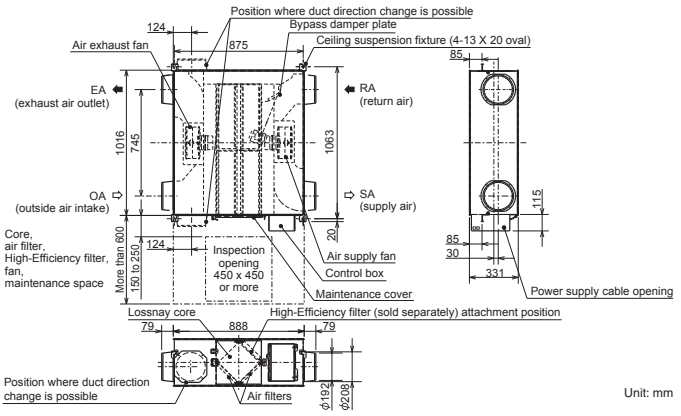


■For LGH-RVX and LGH-RVXT series
*The running current, the input power, the efficiency and the noise are based on the rated airflow, 230V/50Hz, and 220V/60Hz.
*Figures in the chart is measured according to Japan Industrial Standard (JIS B 8628). Characteristic Curves are measured by chamber method.
*For specifications at other frequencies, contact your dealer.

# Commercial Use Lossnay Specifications

## LGH-65RVX-E

| Electrical power supply | | 220-240V/50Hz, 220V/60Hz | | | | | | | |
|---|---|---|---|---|---|---|---|---|---|
| Ventilation mode | | Heat recovery mode | | | | Bypass mode | | | |
| Fan speed | | SP4 | SP3 | SP2 | SP1 | SP4 | SP3 | SP2 | SP1 |
| Running current (A) | | 1.65 | 0.90 | 0.39 | 0.15 | 1.72 | 0.86 | 0.38 | 0.16 |
| Input power (W) | | 252 | 131 | 49 | 15 | 262 | 131 | 47 | 17 |
| Airflow | ($m^3$/h) | 650 | 488 | 325 | 163 | 650 | 488 | 325 | 163 |
| | (L/s) | 181 | 135 | 90 | 45 | 181 | 135 | 90 | 45 |
| External static pressure (Pa) | | 120 | 68 | 30 | 8 | 120 | 68 | 30 | 8 |
| Temperature exchange efficiency (%) | | 77 | 81 | 84 | 86 | – | – | – | – |
| Enthalpy exchange efficiency (%) | Heating | 68.5 | 71 | 76 | 82 | – | – | – | – |
| | Cooling | 66 | 69.5 | 74 | 81 | – | – | – | – |
| Noise (dB) (Measured at 1.5m under the center of the unit in an anechoic chamber) | | 34.5 | 29 | 22 | 18 | 35.5 | 29 | 22 | 18 |
| Weight (kg) | | 38 | | | | | | | |

### Characteristic Curves

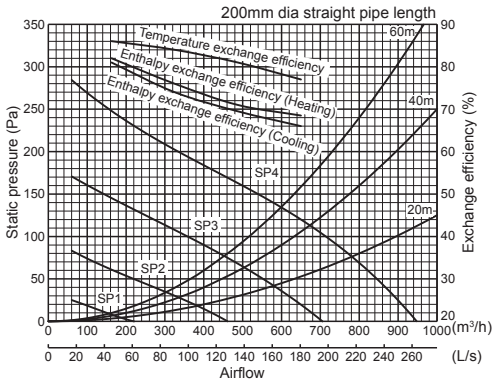


### Dimensions

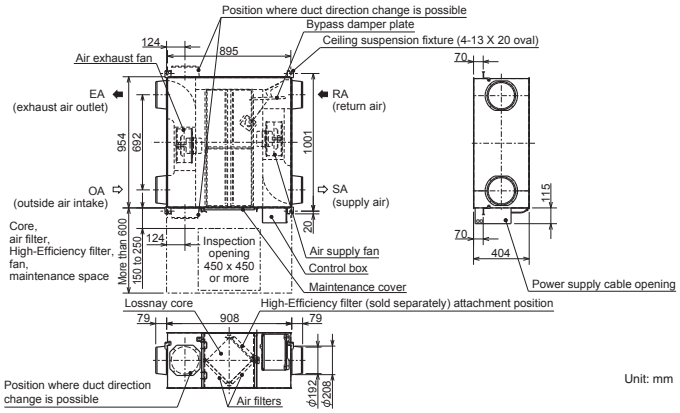


## LGH-80RVX-E

| Electrical power supply | | 220-240V/50Hz, 220V/60Hz | | | | | | | |
|---|---|---|---|---|---|---|---|---|---|
| Ventilation mode | | Heat recovery mode | | | | Bypass mode | | | |
| Fan speed | | SP4 | SP3 | SP2 | SP1 | SP4 | SP3 | SP2 | SP1 |
| Running current (A) | | 1.82 | 0.83 | 0.36 | 0.15 | 1.97 | 0.86 | 0.40 | 0.15 |
| Input power (W) | | 335 | 151 | 60 | 18 | 340 | 151 | 64 | 20 |
| Airflow | ($m^3$/h) | 800 | 600 | 400 | 200 | 800 | 600 | 400 | 200 |
| | (L/s) | 222 | 167 | 111 | 56 | 222 | 167 | 111 | 56 |
| External static pressure (Pa) | | 150 | 85 | 38 | 10 | 150 | 85 | 38 | 10 |
| Temperature exchange efficiency (%) | | 79 | 82.5 | 84 | 85 | – | – | – | – |
| Enthalpy exchange efficiency (%) | Heating | 71 | 73.5 | 78 | 81 | – | – | – | – |
| | Cooling | 70 | 72.5 | 78 | 81 | – | – | – | – |
| Noise (dB) (Measured at 1.5m under the center of the unit in an anechoic chamber) | | 34.5 | 30 | 23 | 18 | 36 | 30 | 23 | 18 |
| Weight (kg) | | 48 | | | | | | | |

### Characteristic Curves

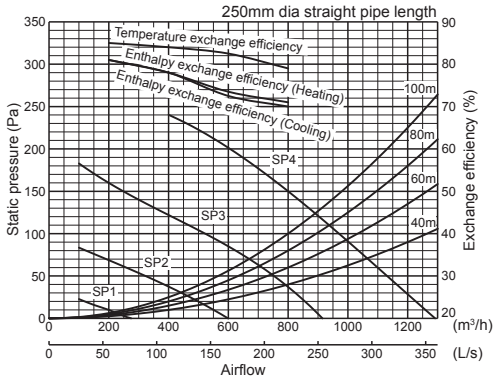


### Dimensions

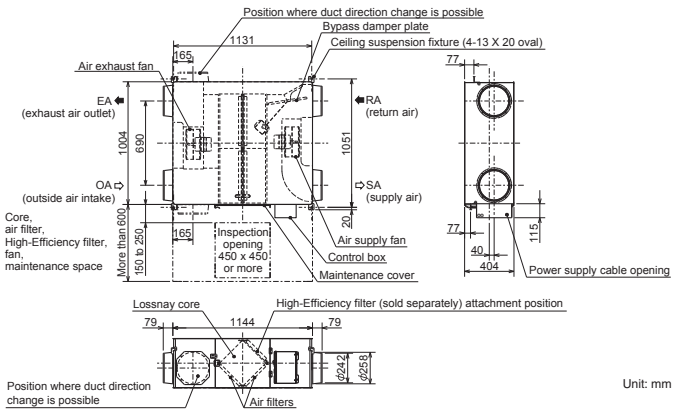


■For LGH-RVX and LGH-RVXT series
*The running current, the input power, the efficiency and the noise are based on the rated airflow, 230V/50Hz, and 220V/60Hz.
*Figures in the chart is measured according to Japan Industrial Standard (JIS B 8628). Characteristic Curves are measured by chamber method.
*For specifications at other frequencies, contact your dealer.

## LGH-100RVX-E

| Electrical power supply | | 220-240V/50Hz, 220V/60Hz | | | | | | | |
|---|---|---|---|---|---|---|---|---|---|
| Ventilation mode | | Heat recovery mode | | | | Bypass mode | | | |
| Fan speed | | SP4 | SP3 | SP2 | SP1 | SP4 | SP3 | SP2 | SP1 |
| Running current (A) | | 2.50 | 1.20 | 0.50 | 0.17 | 2.50 | 1.20 | 0.51 | 0.19 |
| Input power (W) | | 420 | 200 | 75 | 21 | 420 | 200 | 75 | 23 |
| Airflow | ($m^3$/h) | 1000 | 750 | 500 | 250 | 1000 | 750 | 500 | 250 |
| | (L/s) | 278 | 208 | 139 | 69 | 278 | 208 | 139 | 69 |
| External static pressure (Pa) | | 170 | 96 | 43 | 11 | 170 | 96 | 43 | 11 |
| Temperature exchange efficiency (%) | | 80 | 83 | 86.5 | 89.5 | – | – | – | – |
| Enthalpy exchange efficiency (%) | Heating | 72.5 | 74 | 78 | 87 | – | – | – | – |
| | Cooling | 71 | 73 | 77 | 85.5 | – | – | – | – |
| Noise (dB) (Measured at 1.5m under the center of the unit in an anechoic chamber) | | 37 | 31 | 23 | 18 | 38 | 32 | 24 | 18 |
| Weight (kg) | | 54 | | | | | | | |

### Characteristic Curves

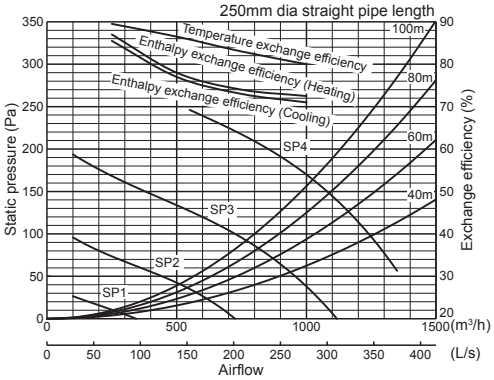


### Dimensions

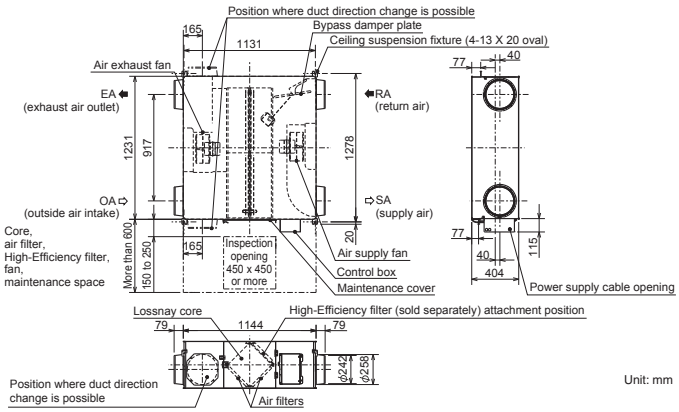


## LGH-150RVX-E

| Electrical power supply | | 220-240V/50Hz, 220V/60Hz | | | | | | | |
|---|---|---|---|---|---|---|---|---|---|
| Ventilation mode | | Heat recovery mode | | | | Bypass mode | | | |
| Fan speed | | SP4 | SP3 | SP2 | SP1 | SP4 | SP3 | SP2 | SP1 |
| Running current (A) | | 3.71 | 1.75 | 0.70 | 0.29 | 3.85 | 1.78 | 0.78 | 0.30 |
| Input power (W) | | 670 | 311 | 123 | 38 | 698 | 311 | 124 | 44 |
| Airflow | ($m^3$/h) | 1500 | 1125 | 750 | 375 | 1500 | 1125 | 750 | 375 |
| | (L/s) | 417 | 313 | 208 | 104 | 417 | 313 | 208 | 104 |
| External static pressure (Pa) | | 175 | 98 | 44 | 11 | 175 | 98 | 44 | 11 |
| Temperature exchange efficiency (%) | | 80 | 82.5 | 84 | 85 | – | – | – | – |
| Enthalpy exchange efficiency (%) | Heating | 72 | 73.5 | 78 | 81 | – | – | – | – |
| | Cooling | 70.5 | 72.5 | 78 | 81 | – | – | – | – |
| Noise (dB) (Measured at 1.5m under the center of the unit in an anechoic chamber) | | 39 | 32 | 24 | 18 | 40.5 | 33 | 26 | 18 |
| Weight (kg) | | 98 | | | | | | | |

### Characteristic Curves

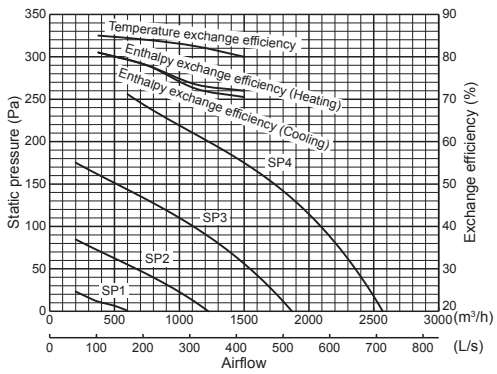


### Dimensions

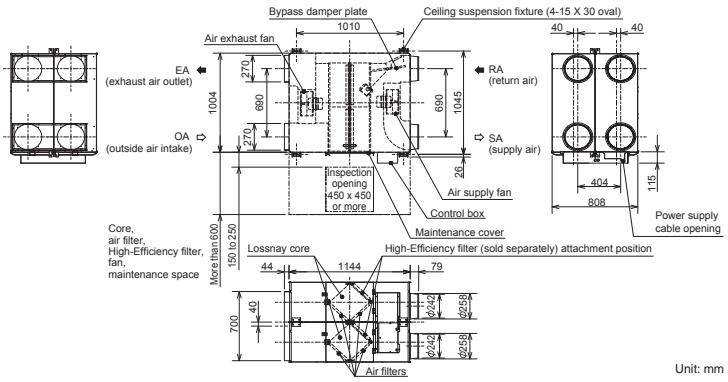


■For LGH-RVX and LGH-RVXT series
*The running current, the input power, the efficiency and the noise are based on the rated airflow, 230V/50Hz, and 220V/60Hz.
*Figures in the chart is measured according to Japan Industrial Standard (JIS B 8628). Characteristic Curves are measured by chamber method.
*For specifications at other frequencies, contact your dealer.

# Commercial Use Lossnay Specifications

## LGH-200RVX-E

| | | | | | | | | | |
|---|---|---|---|---|---|---|---|---|---|
| Electrical power supply | | 220-240V/50Hz, 220V/60Hz | | | | | | | |
| Ventilation mode | | Heat recovery mode | | | | Bypass mode | | | |
| Fan speed | | SP4 | SP3 | SP2 | SP1 | SP4 | SP3 | SP2 | SP1 |
| Running current (A) | | 4.88 | 2.20 | 0.88 | 0.33 | 4.54 | 2.06 | 0.87 | 0.35 |
| Input power (W) | | 850 | 400 | 153 | 42 | 853 | 372 | 150 | 49 |
| Airflow | ($m^3$/h) | 2000 | 1500 | 1000 | 500 | 2000 | 1500 | 1000 | 500 |
| | (L/s) | 556 | 417 | 278 | 139 | 556 | 417 | 278 | 139 |
| External static pressure (Pa) | | 150 | 84 | 38 | 10 | 150 | 84 | 38 | 10 |
| Temperature exchange efficiency (%) | | 80 | 83 | 86.5 | 89.5 | – | – | – | – |
| Enthalpy exchange efficiency (%) | Heating | 72.5 | 74 | 78 | 87 | – | – | – | – |
| | Cooling | 71 | 73 | 77 | 85.5 | – | – | – | – |
| Noise (dB) (Measured at 1.5m under the center of the unit in an anechoic chamber) | | 40 | 36 | 28 | 18 | 41 | 36 | 27 | 19 |
| Weight (kg) | | 110 | | | | | | | |

### Characteristic Curves

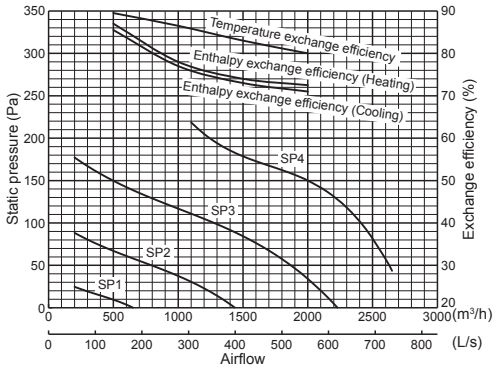


### Dimensions

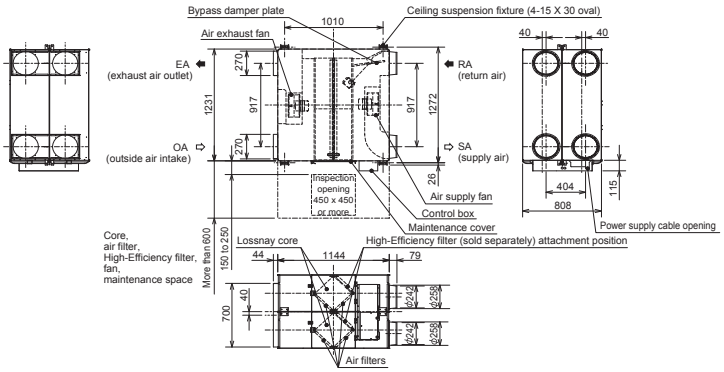


Unit: mm

## RVXT Series

## LGH-150RVXT-E

| | | | | | | | | | |
|---|---|---|---|---|---|---|---|---|---|
| Electrical power supply | | 220-240V/50Hz, 220V/60Hz | | | | | | | |
| Ventilation mode | | Heat recovery mode | | | | Bypass mode | | | |
| Fan speed | | SP4 | SP3 | SP2 | SP1 | SP4 | SP3 | SP2 | SP1 |
| Running current (A) | | 4.30 | 2.40 | 1.10 | 0.36 | 3.40 | 1.80 | 0.77 | 0.31 |
| Input power (W) | | 792 | 421 | 176 | 48 | 625 | 334 | 134 | 37 |
| Airflow | ($m^3$/h) | 1500 | 1125 | 750 | 375 | 1500 | 1125 | 750 | 375 |
| | (L/s) | 417 | 313 | 208 | 104 | 417 | 313 | 208 | 104 |
| External static pressure (Pa) | Supply | 175 | 98 | 44 | 11 | 175 | 98 | 44 | 11 |
| | Return | 100 | 56 | 25 | 6 | 100 | 56 | 25 | 6 |
| Temperature exchange efficiency (%) | | 80 | 80.5 | 81 | 81.5 | – | – | – | – |
| Enthalpy exchange efficiency (%) | Heating | 70 | 71 | 73 | 75 | – | – | – | – |
| | Cooling | 69 | 70 | 72 | 74 | – | – | – | – |
| Noise (dB) (Measured at 1.5m under the center of the unit in an anechoic chamber) | | 39.5 | 35.5 | 29.5 | 22 | 39 | 33 | 26.5 | 20.5 |
| Weight (kg) | | 156 | | | | | | | |

### Characteristic Curves

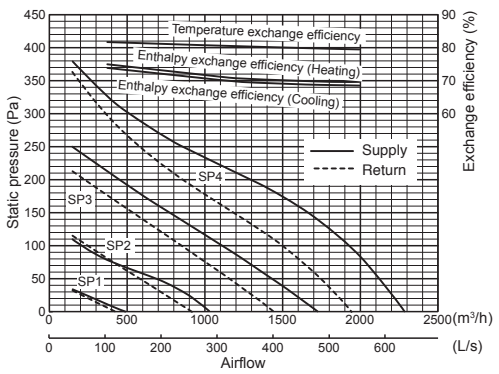


### Dimensions

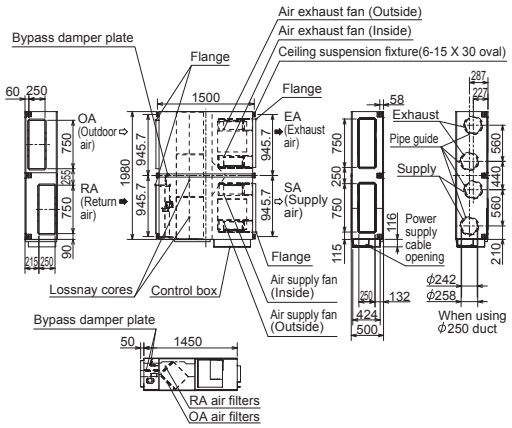


Unit: mm

■For LGH-RVX and LGH-RVXT series
*The running current, the input power, the efficiency and the noise are based on the rated airflow, 230V/50Hz, and 220V/60Hz.
*Figures in the chart is measured according to Japan Industrial Standard (JIS B 8628). Characteristic Curves are measured by chamber method.
*For specifications at other frequencies, contact your dealer.

## LGH-200RVXT-E

| Electrical power supply | | 220-240V/50Hz, 220V/60Hz | | | | | | | |
|---|---|---|---|---|---|---|---|---|---|
| Ventilation mode | | Heat recovery mode | | | | Bypass mode | | | |
| Fan speed | | SP4 | SP3 | SP2 | SP1 | SP4 | SP3 | SP2 | SP1 |
| Running current (A) | | 5.40 | 2.70 | 1.10 | 0.39 | 5.00 | 2.20 | 0.85 | 0.34 |
| Input power (W) | | 1000 | 494 | 197 | 56 | 916 | 407 | 150 | 45 |
| Airflow | ($m^3$/h) | 2000 | 1500 | 1000 | 500 | 2000 | 1500 | 1000 | 500 |
| | (L/s) | 556 | 417 | 278 | 139 | 556 | 417 | 278 | 139 |
| External static pressure (Pa) | Supply | 175 | 98 | 44 | 11 | 175 | 98 | 44 | 11 |
| | Return | 100 | 56 | 25 | 6 | 100 | 56 | 25 | 6 |
| Temperature exchange efficiency (%) | | 80 | 81 | 82.5 | 84 | – | – | – | – |
| Enthalpy exchange efficiency (%) | Heating | 72.5 | 73.5 | 77 | 83 | – | – | – | – |
| | Cooling | 70 | 71 | 74.5 | 80.5 | – | – | – | – |
| Noise (dB) (Measured at 1.5m under the center of the unit in an anechoic chamber) | | 39.5 | 35.5 | 28 | 22 | 40.5 | 34.5 | 27 | 20.5 |
| Weight (kg) | | 159 | | | | | | | |

### Characteristic Curves

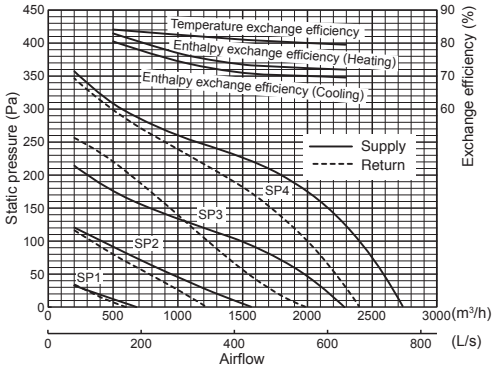


### Dimensions

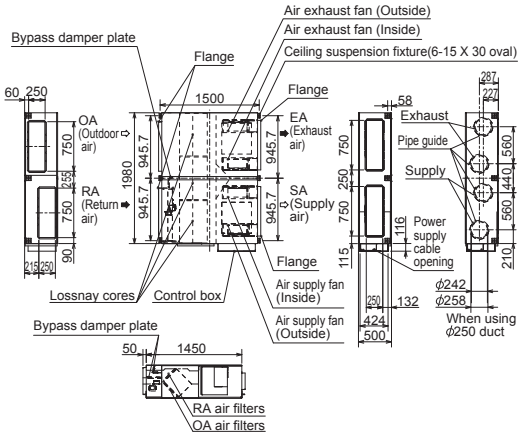


Unit: mm

## LGH-250RVXT-E

| Electrical power supply | | 220-240V/50Hz, 220V/60Hz | | | | | | | |
|---|---|---|---|---|---|---|---|---|---|
| Ventilation mode | | Heat recovery mode | | | | Bypass mode | | | |
| Fan speed | | SP4 | SP3 | SP2 | SP1 | SP4 | SP3 | SP2 | SP1 |
| Running current (A) | | 7.60 | 3.60 | 1.40 | 0.57 | 6.90 | 3.10 | 1.30 | 0.49 |
| Input power (W) | | 1446 | 687 | 244 | 82 | 1298 | 587 | 212 | 69 |
| Airflow | ($m^3$/h) | 2500 | 1875 | 1250 | 625 | 2500 | 1875 | 1250 | 625 |
| | (L/s) | 694 | 521 | 347 | 174 | 694 | 521 | 347 | 174 |
| External static pressure (Pa) | Supply | 175 | 98 | 44 | 11 | 175 | 98 | 44 | 11 |
| | Return | 100 | 56 | 25 | 6 | 100 | 56 | 25 | 6 |
| Temperature exchange efficiency (%) | | 77 | 79 | 80.5 | 82.5 | – | – | – | – |
| Enthalpy exchange efficiency (%) | Heating | 68 | 71.5 | 74 | 79 | – | – | – | – |
| | Cooling | 65.5 | 69 | 71.5 | 76.5 | – | – | – | – |
| Noise (dB) (Measured at 1.5m under the center of the unit in an anechoic chamber) | | 43 | 39 | 32 | 24 | 44 | 38.5 | 31 | 22.5 |
| Weight (kg) | | 198 | | | | | | | |

### Characteristic Curves

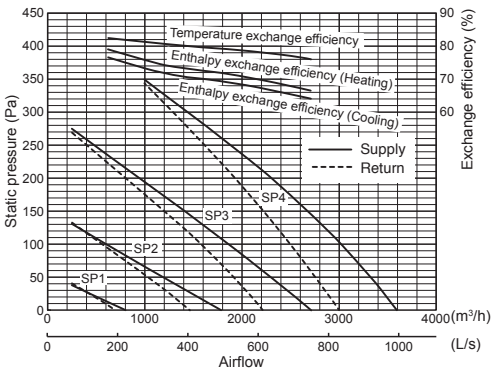


### Dimensions

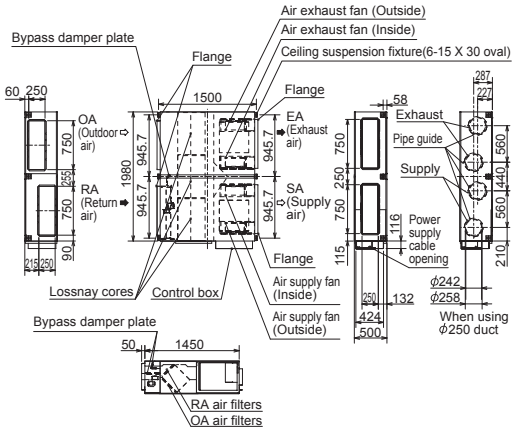


Unit: mm

■For LGH-RVX and LGH-RVXT series
*The running current, the input power, the efficiency and the noise are based on the rated airflow, 230V/50Hz, and 220V/60Hz.
*Figures in the chart is measured according to Japan Industrial Standard (JIS B 8628). Characteristic Curves are measured by chamber method.
*For specifications at other frequencies, contact your dealer.

# Commercial Use Lossnay Specifications

## GUF Series

### GUF-50RD4

| | | | | | |
|---|---|---|---|---|---|
| Electrical power supply | | 220-240V/50Hz | | | |
| Ventilation mode | | Heat recovery mode | | Bypass mode | |
| Fan speed | | High | Low | High | Low |
| Running current (A) | | 1.15 | 0.70 | 1.15 | 0.70 |
| Input power (W) | | 235-265 | 150-165 | 235-265 | 150-165 |
| Airflow | ($m^3$/h) | 500 | 400 | 500 | 400 |
| | (L/s) | 139 | 111 | 139 | 111 |
| External static pressure (Pa) | | 140 | 90 | 140 | 90 |
| Temperature exchange efficiency (%) | | 77.5 | 80 | – | – |
| Enthalpy exchange efficiency (%) | Heating | 68 | 71 | – | – |
| | Cooling | 65 | 67 | – | – |
| Cooling capacity (kW) | | 5.57 (1.94) | | | |
| Heating capacity (kW) | | 6.21 (2.04) | | | |
| Capacity equivalent to the indoor unit | | P32 | | | |
| Humidifier | Humidifying | – | | | |
| | Humidifying capacity (kg/h) | – | | | |
| | Water supply pressure | – | | | |
| Noise (dB) (Measured at 1.5m under the center of the unit in an anechoic chamber) | | 33.5-34.5 | 29.5-30.5 | 35-36 | 29.5-30.5 |
| Weight (kg) | | 48 | | | |

### Characteristic Curves

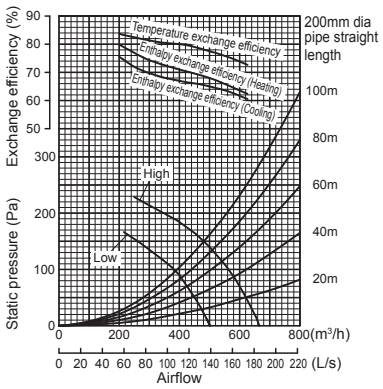


### Dimensions

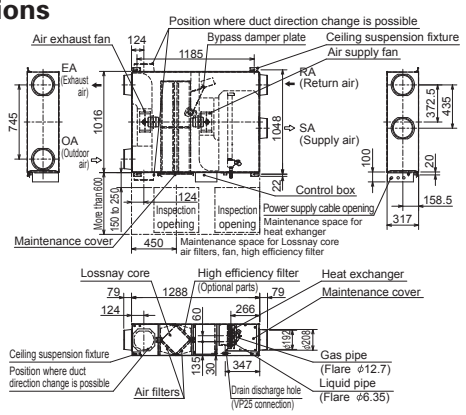


Unit: mm

### GUF-100RD4

| | | | | | |
|---|---|---|---|---|---|
| Electrical power supply | | 220-240V/50Hz | | | |
| Ventilation mode | | Heat recovery mode | | Bypass mode | |
| Fan speed | | High | Low | High | Low |
| Running current (A) | | 2.20 | 1.73 | 2.25 | 1.77 |
| Input power (W) | | 480-505 | 370-395 | 490-515 | 385-410 |
| Airflow | ($m^3$/h) | 1000 | 800 | 1000 | 800 |
| | (L/s) | 278 | 222 | 278 | 222 |
| External static pressure (Pa) | | 140 | 90 | 140 | 90 |
| Temperature exchange efficiency (%) | | 79.5 | 81.5 | – | – |
| Enthalpy exchange efficiency (%) | Heating | 71 | 74 | – | – |
| | Cooling | 69 | 71 | – | – |
| Cooling capacity (kW) | | 11.44 (4.12) | | | |
| Heating capacity (kW) | | 12.56 (4.26) | | | |
| Capacity equivalent to the indoor unit | | P63 | | | |
| Humidifier | Humidifying | – | | | |
| | Humidifying capacity (kg/h) | – | | | |
| | Water supply pressure | – | | | |
| Noise (dB) (Measured at 1.5m under the center of the unit in an anechoic chamber) | | 38-39 | 34-35 | 38-39 | 35-36 |
| Weight (kg) | | 82 | | | |

### Characteristic Curves

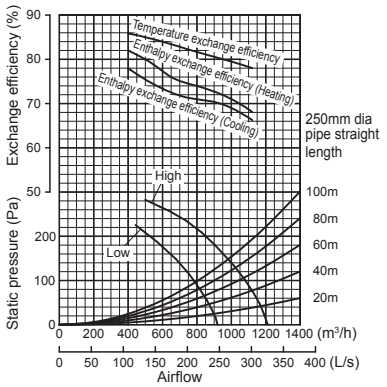


### Dimensions

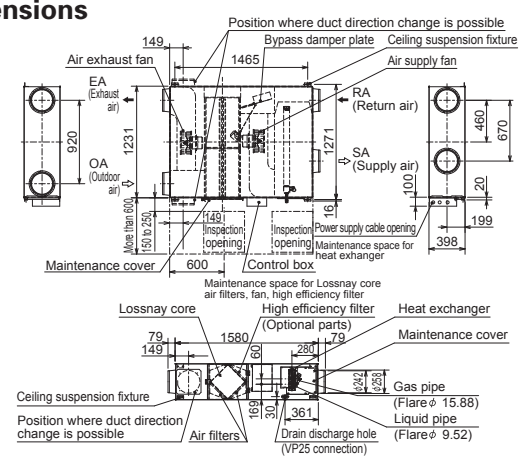


Unit: mm

■For GUF series
*Cooling/Heating capacity indicates the maximum value at operation under the following condition.
Cooling: Indoor: 27°C DB/19°C WB Outdoor: 35°C DB/24°C WB
Heating: Indoor: 20°C DB/13.8°C WB Outdoor: 7°C DB/6°C WB
*The figures in ( ) indicates heat recoverying capacity of heat exchange core.
*Figures in the chart are measured according to Japan Industrial Standard (JIS B 8628). Characteristic Curves are measured by chamber method.

## GUF-50RDH4

| | | | | | |
|---|---|---|---|---|---|
| Electrical power supply | | 220-240V/50Hz | | | |
| Ventilation mode | | Heat recovery mode | | Bypass mode | |
| Fan speed | | High | Low | High | Low |
| Running current (A) | | 1.15 | 0.70 | 1.15 | 0.70 |
| Input power (W) | | 235-265 | 150-165 | 235-265 | 150-165 |
| Airflow | ($m^3$/h) | 500 | 400 | 500 | 400 |
| | (L/s) | 139 | 111 | 139 | 111 |
| External static pressure (Pa) | | 125 | 80 | 125 | 80 |
| Temperature exchange efficiency (%) | | 77.5 | 80 | – | – |
| Enthalpy exchange efficiency (%) | Heating | 68 | 71 | – | – |
| | Cooling | 65 | 67 | – | – |
| Cooling capacity (kW) | | 5.57 (1.94) | | | |
| Heating capacity (kW) | | 6.21 (2.04) | | | |
| Capacity equivalent to the indoor unit | | P32 | | | |
| Humidifier | Humidifying | Permeable film humidifier | | | |
| | Humidifying capacity (kg/h) | 2.7 (heating) | | | |
| | Water supply pressure | Minimum pressure : 2.0 × $10^4$Pa Maximum pressure : 49.0 × $10^4$Pa | | | |
| Noise (dB) (Measured at 1.5m under the center of the unit in an anechoic chamber) | | 33.5-34.5 | 29.5-30.5 | 35-36 | 29.5-30.5 |
| Weight (kg) | | 51 (filled with water 55) | | | |

### Characteristic Curves

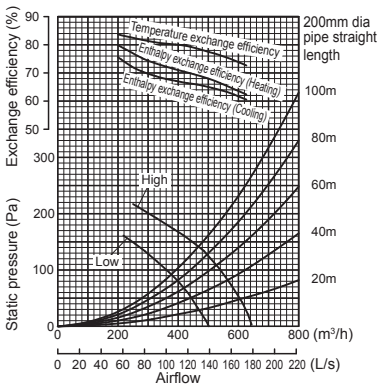


### Dimensions

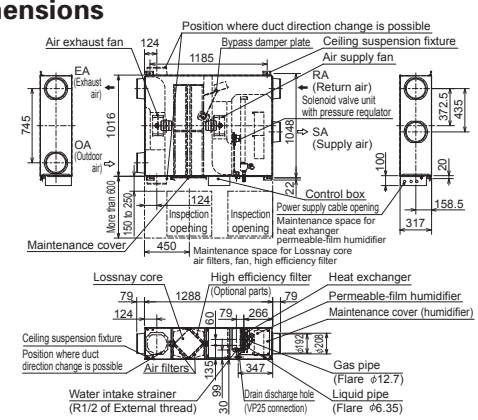


Unit: mm

## GUF-100RDH4

| | | | | | |
|---|---|---|---|---|---|
| Electrical power supply | | 220-240V/50Hz | | | |
| Ventilation mode | | Heat recovery mode | | Bypass mode | |
| Fan speed | | High | Low | High | Low |
| Running current (A) | | 2.20 | 1.76 | 2.25 | 1.77 |
| Input power (W) | | 480-505 | 385-400 | 490-515 | 385-410 |
| Airflow | ($m^3$/h) | 1000 | 800 | 1000 | 800 |
| | (L/s) | 278 | 222 | 278 | 222 |
| External static pressure (Pa) | | 135 | 86 | 135 | 86 |
| Temperature exchange efficiency (%) | | 79.5 | 81.5 | – | – |
| Enthalpy exchange efficiency (%) | Heating | 71 | 74 | – | – |
| | Cooling | 69 | 71 | – | – |
| Cooling capacity (kW) | | 11.44 (4.12) | | | |
| Heating capacity (kW) | | 12.56 (4.26) | | | |
| Capacity equivalent to the indoor unit | | P63 | | | |
| Humidifier | Humidifying | Permeable film humidifier | | | |
| | Humidifying capacity (kg/h) | 5.4 (heating) | | | |
| | Water supply pressure | Minimum pressure : 2.0 × $10^4$Pa Maximum pressure : 49.0 × $10^4$Pa | | | |
| Noise (dB) (Measured at 1.5m under the center of the unit in an anechoic chamber) | | 38-39 | 34-35 | 38-39 | 35-36 |
| Weight (kg) | | 88 (filled with water 96) | | | |

### Characteristic Curves

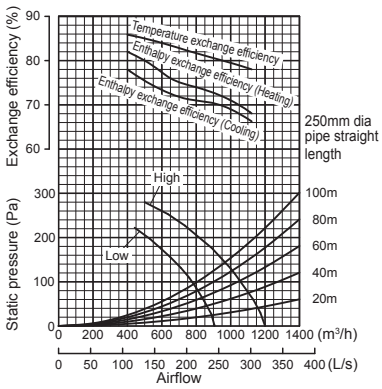


### Dimensions

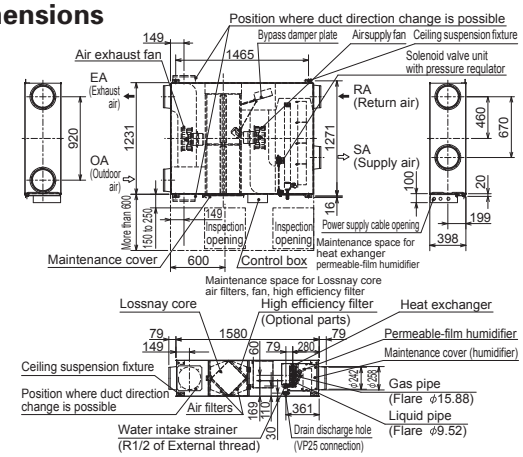


Unit: mm

■For GUF series
*Cooling/Heating capacity indicates the maximum value at operation under the following condition.
Cooling: Indoor: 27°C DB/19°C WB Outdoor: 35°C DB/24°C WB
Heating: Indoor: 20°C DB/13.8°C WB Outdoor: 7°C DB/6°C WB
*The figures in ( ) indicates heat recoverying capacity of heat exchange core.
*Figures in the chart are measured according to Japan Industrial Standard (JIS B 8628). Characteristic Curves are measured by chamber method.

# Optimized System Integration

## Improved Installation Appearance

Full-dot backlit LCD makes it easy to see and control the unit.

**Previous remote controller**

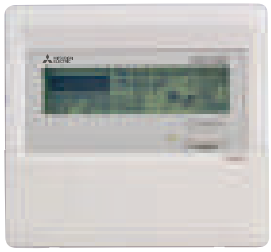

PZ-60DR-E

**Current remote controller**

PZ-61DR-E

## List of Remote Controller Settings and Functions

The remote controller provides a wide range of functions and features in addition to the main functions described below, such as sophisticated energy saving control and easy user interface.

| Function (Communicating mode) | **PZ-61DR-E** | **PZ-43SMF-E** |
|---|---|---|
| Fan speed selection | 4 fan speeds | 2 of 4 fan speeds |
| Ventilation mode selection | Energy recovery / Bypass / Auto | Energy recovery / Bypass / Auto |
| Night-purge setting (time and fan speed) | Yes | No |
| Function setting from RC | Yes | No |
| Bypass temp. free setting | Yes | No |
| Heater-On temp. free setting | Yes | No |
| Fan power up after installation | Yes | No |
| 0 - 10VDC external input | Yes | Yes |
| ON/OFF timer | Yes | Yes |
| Auto-Off timer | Yes | No |
| Weekly timer | Yes | No |
| Operation restrictions (ON/OFF, Ventilation mode, fan speed) | Yes | No |
| Operation restrictions (Fan speed skip setting) | Yes | No |
| Screen contrast adjustment | Yes | No |
| Language selection | Yes (8 languages)* | No (English only) |
| Initializing | Yes | No |
| Filter cleaning sign | Yes | Yes |
| Lossnay core cleaning sign | Yes | No |
| Error indication | Yes | Yes |
| Error history | Yes | No |
| OA/RA/SA temp. display | Yes | No |

*The 8 languages are English, German, French, Spanish, Italian, Portuguese, Russian and Swedish.

# Controllers

## Lossnay Remote Controller (PZ-61DR-E)

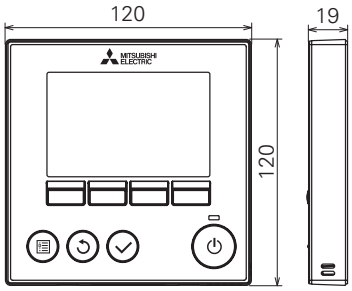


Unit: mm

### Operation section

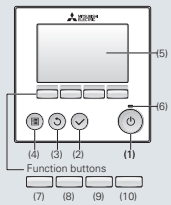


(1) Press to turn ON/OFF the Lossnay unit.
(2) Press to save the setting.
(3) Press to return to the previous screen.
(4) Press to bring up the Main menu.
(5) Operation settings will appear.
When the backlight is off, pressing any button turns the backlight on and it will stay lit for a certain period of time depending on the screen.
(6) This lamp lights up in green while the unit is in operation. It blinks while the remote controller is starting up or when there is an error.
(7) Main menu: Press to move the cursor down.
(8) Main display: Press to change the fan speed.
Main menu: Press to move the cursor up.
(9) Main display: Press to change the ventilation mode.
Main menu: Press to go to the previous page.
(10) Main menu: Press to go to the next page.

### Display section

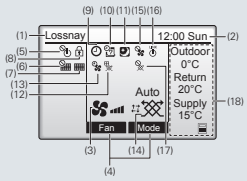


(1) Lossnay is always displayed.
(2) Current time appears here.
(3) Fan speed setting appears here.
(4) Functions of the corresponding buttons appear here.
(5) Appears when the ON/OFF operation is centrally controlled.
(6) Appears when the filter reset function is centrally controlled.
(7) Indicates when the filter and/or Lossnay core needs maintenance.
(8) Appears when the buttons are locked and/or a fan speed is skipped.
(9) Appears when the On/Off timer or Auto-off timer function is enabled.
(10) Appears when the Weekly timer is enabled.
(11) Appears when the night-purge function is available.
(12) Appears when performing operation to protect the equipment.
(13) Appears when performing the power supply/exhaust function or the delay operation at the start of operation.
(14) Indicates the ventilation mode setting.
(15) Appears when external fan speed operation.
(16) Appears when operation is interlocked with the external unit.
(17) Appears when external ventilation mode operation.
(18) Displays the outdoor temperature, return temperature, and supply temperature (calculated value).

## Lossnay Remote Controller (PZ-43SMF-E)

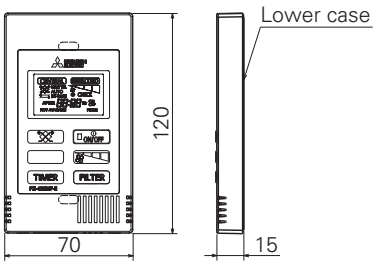


Unit: mm

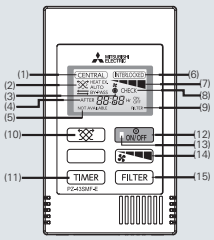


(1) Displayed during remote operation is prohibited by the centralized control unit, etc.
(2) Displays the ventilation mode status.

| | |
|---|---|
| Heat exchange | HEAT EX. |
| By-pass | BY-PASS |
| Automatic (HEAT EX./BY-PASS) | HEAT EX. AUTO or AUTO BY-PASS |

(3) Displayed while the Lossnay remote controller is powered on.
(4) Displays on-timer or off-timer duration.
(5) When a button is pressed for a function which the Lossnay unit cannot perform, this display flashes concurrently with the display of the function.
(6) Displayed when the Lossnay starts off by interlocked indoor unit or external signal.
(7) Displays the selected fan speed.
(8) Displayed together with the malfunctioning unit (3 digits) and an error code (4 digits).
(9) Displayed when the accumulated operating time reaches the time set for filter maintenance.
(10) Used to select the ventilation mode among heat exchange, by-pass or automatic.
(11) Increasing 0:30 by pressing it once. Keep pressing the button for fast-forwarding.
(12) Switch for start and stop.
(13) On during operation. Flashes when a malfunction occurs.
(14) Used to select the fan speed either "Low" or "High".

Low → High

(15) Press twice to reset the filter sign display.

# Filters

## Standard Filters

Replacements for the standard filter supplied with the Lossnay main unit.

| Model | Number of filters per set | | Applicable model | Filter material | Classification | |
|---|---|---|---|---|---|---|
| | Supply | Exhaust | | | EN779(2012) | ISO 16890 |
| PZ-15RF8-E | 1 | 1 | LGH-15RVX-E | Non-woven fabrics filter | G3 | Coarse 35% |
| PZ-25RF8-E | 2 | 2 | LGH-25RVX-E | | | |
| PZ-35RF8-E | 2 | 2 | LGH-35RVX-E | | | |
| PZ-50RF8-E | 2 | 2 | LGH-50RVX-E,<br>GUF-50RD4, GUF-50RDH4 | | | |
| PZ-65RF8-E | 2 | 2 | LGH-65RVX-E | | | |
| PZ-80RF8-E | 2 | 2 | LGH-80RVX-E, LGH-150RVX-E (2 sets) | | | |
| PZ-100RF8-E | 2 | 2 | LGH-100RVX-E, LGH-200RVX-E (2 sets),<br>GUF-100RD4, GUF-100RDH4 | | | |
| PZ-150RTF-E | 2 | 2 | LGH-150RVXT-E | | | Coarse 50% |
| PZ-250RTF-E | 2 | 2 | LGH-200RVXT-E,<br>LGH-250RVXT-E | | | |

## High-efficiency Filters Optional

These high-efficiency filters can be easily inserted in the Lossnay unit without the need to attach external parts.

| Model | Number of filters per set | Applicable model | Filter material | Classification | |
|---|---|---|---|---|---|
| | Supply | | | EN779(2012) | ISO 16890 |
| PZ-15RFM-E | 1 | LGH-15RVX-E | Noncombustible fiber (polyester, polyolefin) | M6 | ePM10 75% |
| PZ-25RFM-E | 2 | LGH-25RVX-E | | | |
| PZ-35RFM-E | 2 | LGH-35RVX-E | | | |
| PZ-50RFM-E | 2 | LGH-50RVX-E,<br>GUF-50RD4, GUF-50RDH4 | | | |
| PZ-65RFM-E | 2 | LGH-65RVX-E | | | |
| PZ-80RFM-E | 2 | LGH-80RVX-E, LGH-150RVX-E (2 sets) | | | |
| PZ-100RFM-E | 2 | LGH-100RVX-E, LGH-200RVX-E (2 sets),<br>GUF-100RD4, GUF-100RDH4 | | | |

## Advanced High-efficiency Filters (For the LGH-RVX and GUF Series) Optional

These advanced high-efficiency filters are designed to remove approx. 95% of airborne particulates that are 2.0μm or larger.

| Model | Number of filters per set | Applicable model | Filter material | Classification | |
|---|---|---|---|---|---|
| | Supply | | | EN779(2012) | ISO 16890 |
| PZ-15RFP-E | 1 | LGH-15RVX-E | Noncombustible fiber (polyester, polyolefin) | – | ePM10 70% |
| PZ-25RFP-E | 2 | LGH-25RVX-E | | | |
| PZ-35RFP-E | 2 | LGH-35RVX-E | | | |
| PZ-50RFP-E | 2 | LGH-50RVX-E, GUF-50RD4, GUF-50RDH4 | | | |
| PZ-65RFP-E | 2 | LGH-65RVX-E | | | |
| PZ-80RFP-E | 2 | LGH-80RVX-E, LGH-150RVX-E (2 sets) | | | |
| PZ-100RFP-E | 2 | LGH-100RVX-E, LGH-200RVX-E (2 sets), GUF-100RD4, GUF-100RDH4 | | | |

## Advanced High-efficiency Filters (For the LGH-RVXT Series) Optional

These advanced high-efficiency filters can be easily inserted in the Lossnay unit without the need to attach external parts.

| Model | Number of filters per set | Applicable model | Filter material | Classification | |
|---|---|---|---|---|---|
| | | | | EN779(2012) | ISO 16890 |
| PZ-M6RTFM-E | 3 | LGH-150RVXT-E, LGH-200RVXT-E, LGH-250RVXT-E | Non-woven fabrics filter | M6 | ePM10 75% |
| PZ-F8RTFM-E | | | | F8 | ePM1 65% |

# Optional Dx-coil Unit for Lossnay

## Supply Comfortable Control

**Product Features**

- Lossnay return air and supply air temperature control are possible by connecting the Dx-coil unit to Mr. Slim (power inverter series).
- Connecting the Dx-coil unit will expand Lossnay's temperature control range (500-2,500 CMH).
  Suitable for various applications such as offices, shops and schools etc.

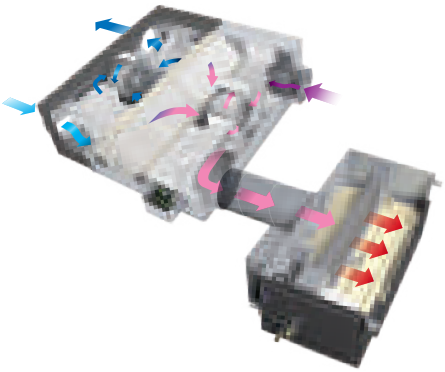

**■ Target Applications**

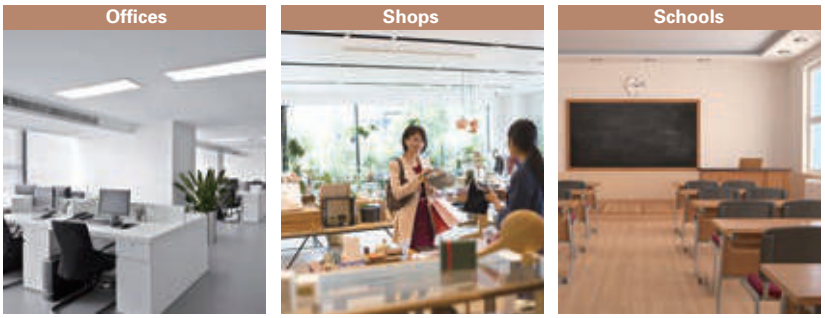


**Application Examples**

### Supplemental Air-conditioning System (Return Air Temperature Control)

**It may be possible to reduce one air-conditioning unit by adopting return air temperature control.**

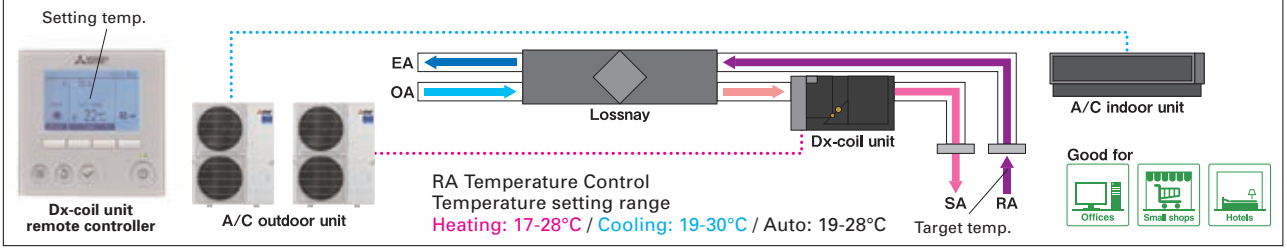


### Main Air-conditioning System (Return Air Temperature Control)

**Lossnay + Dx-coil unit may be used as the main air-conditioning system and a ventilation system for lower air-conditioning load applications.**

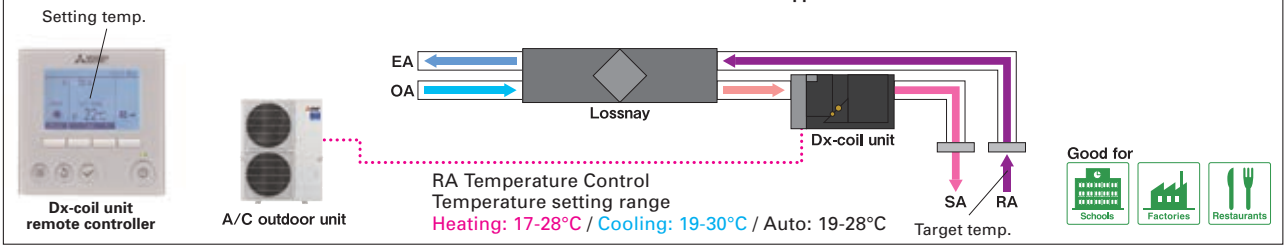


### Outdoor Air Treatment System (Supply Air Temperature Control)

**Controlling the temperature of outdoor air simplifies air-conditioning design and control.**

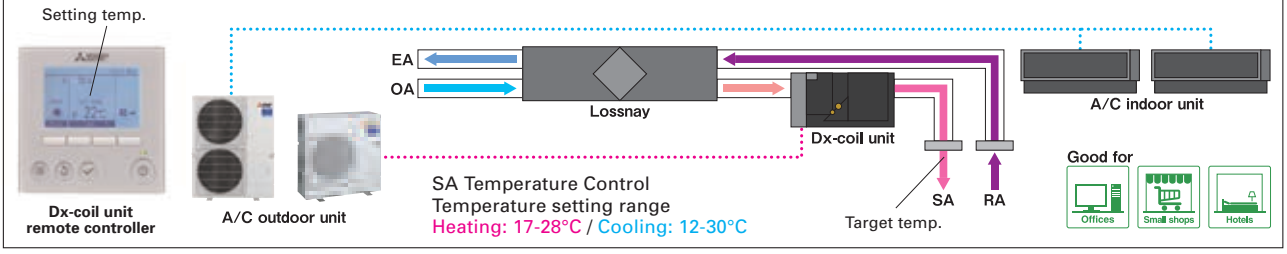


*The above images of using the LGH-RVXT Series are simply examples for reference.

## Flexible Installation

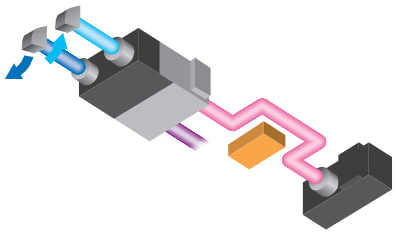

**Flexible Connection to Lossnay**

The length of the connection cable (accessory) between the Lossnay and Dx-coil unit is about 6m, so flexible installation is possible (two units can be installed close together or far apart with straight or bent ducting).

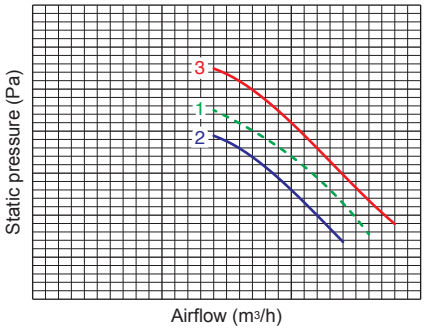


**To Keep High Static Pressure**

P-Q curve image

1. Lossnay unit
2. Lossnay unit + Dx-coil unit
3. Lossnay unit (fan power-up +4) + Dx-coil unit

Dx-coil unit static pressure loss is kept to a minimum, making it possible to maintain high static pressure using the fan power-up function of the Lossnay. The fan power-up function is only available when used with the PZ-61DR-E Lossnay remote controller.

**Drain Pump Equipment**

A built-in drain pump makes attaching the drain hose in the ceiling cavity easy, resulting in simple and fast installation.

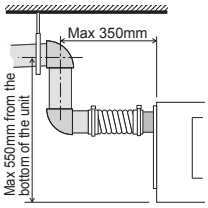


## User-friendly System Control

**Flexible Remote Controller Selection**

**(A) One remote controller**

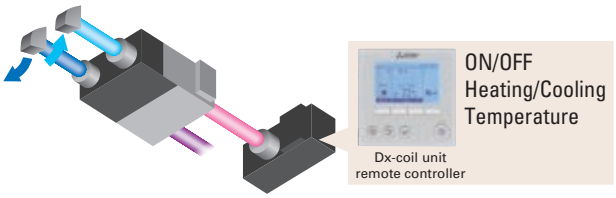


**(B) Two remote controllers**

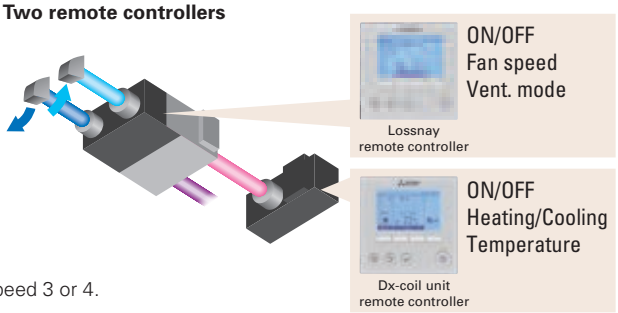


When using only one remote controller, Lossnay fan speed is fixed at fan speed 3 or 4.
When using two remote controllers, all Lossnay functions are available.
*1: Lossnay unit and Dx-coil unit both will synchronously switch on and off.
*2: When one of the two remote controllers is turned ON, the other remote controller turns ON synchronously.

**Priority Mode Selection**

Temperature priority mode (factory setting) or Fan speed priority mode are selectable when Lossnay unit fan speed is controlled by a $CO_2$-sensor or a BMS (analog input (0 - 10 VDC) or a volt-free input).

*During fan speed 1 or 2, the Dx-coil unit is always set to thermo-OFF

| Operation mode | Fan speed order from external input | Actual fan speed | |
|---|---|---|---|
| | | Temp. priority | Fan speed priority |
| Heating or Cooling | FS4 | FS4 | FS4 |
| | FS3 | FS3 | FS3 |
| | FS2 | FS3 | FS2 |
| | FS1 | FS3 | FS1 |
| Fan | FS4 | FS4 | FS4 |
| | FS3 | FS3 | FS3 |
| | FS2 | FS2 | FS2 |
| | FS1 | FS1 | FS1 |

# Specifications

## GUG-01SL-E (Connection to LGH-50RVX-E or LGH-65RVX-E)

GUG-01SL-E

| | | | | | | | | | |
|---|---|---|---|---|---|---|---|---|---|
| Refrigerant | | R410A | | | | | | | |
| Electrical power supply | | 220-240V / 50Hz, 220V / 60Hz (Supplied from outdoor unit) | | | | | | | |
| Input power | | Heating / Fan: 2.5W, Cooling: 12.4W | | | | | | | |
| Running current | | Less than 0.1A | | | | | | | |
| Weight | | 21kg *Accessories: Approx. 1kg | | | | | | | |
| Function | | Heating / Cooling / Auto / Fan *Auto is only available for RA temperature control | | | | | | | |
| | | RA (Return Air) temperature control | | | | | | | |
| RA (Return Air) temperature control | | | | | | | | | |
| Connectable Lossnay unit | | LGH-50RVX-E | | | | LGH-65RVX-E | | | |
| Capacity [kW] | Heating | 6.5 ( 2.4 + 4.1 ) | | | | 7.7 ( 3.2 + 4.5 ) | | | |
| | Cooling | 5.6 ( 2.0 + 3.6 ) | | | | 6.6 ( 2.6 + 4.0 ) | | | |
| SHF | | 0.66 | | | | 0.69 | | | |
| Performance index | Heating | 4.09 | | | | 4.72 | | | |
| | Cooling | 4.69 | | | | 5.03 | | | |
| Airflow range at SP3 and SP4 | | 350 - 695 $m^3/h$ | | | | 350 - 900 $m^3/h$ | | | |
| Connectable outdoor unit | | PUHZ-ZRP35 | | | | PUHZ-ZRP35 | | | |
| Ext. piping | | Diameter Liquid / Gas: 6.35 / 12.7 | | | | Diameter Liquid / Gas: 6.35 / 12.7 | | | |
| | | Maximum length: 50m, Maximum height: 30m | | | | Maximum length: 50m, Maximum height: 30m | | | |
| Ventilation specifications | | | | | | | | | |
| Fan speed | | SP4 | SP3 | SP2 | SP1 | SP4 | SP3 | SP2 | SP1 |
| Airflow | [$m^3/h$] | 500 | 375 | 250 | 125 | 650 | 488 | 325 | 163 |
| | [L/s] | 139 | 104 | 69 | 35 | 181 | 135 | 90 | 45 |
| External static pressure [Pa] | | 105 | 59 | 26 | 7 | 95 | 53 | 24 | 6 |

## Characteristic Curves

**LGH-50RVX-E**

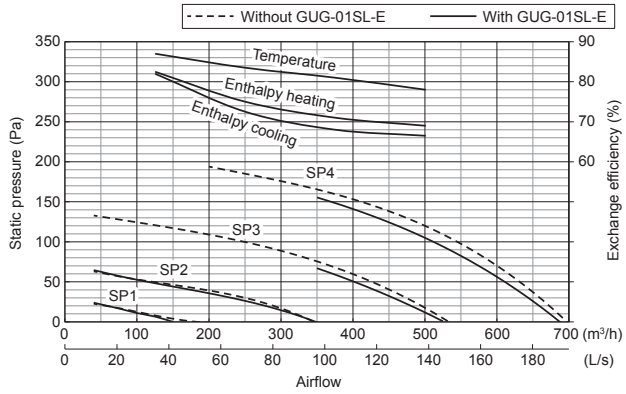


**LGH-65RVX-E**

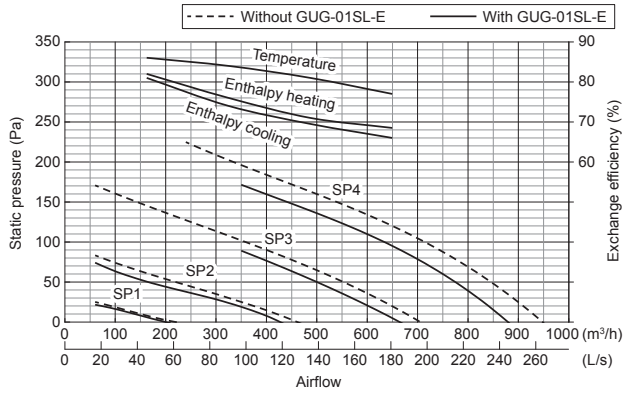


## Dimensions

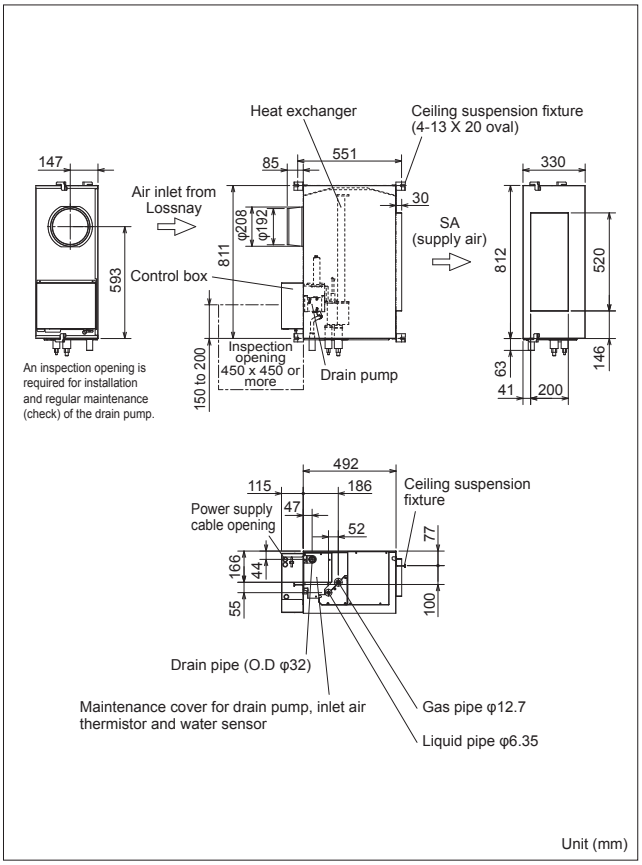

## GUG-02SL-E (Connection to LGH-80RVX-E or LGH-100RVX-E)

GUG-02SL-E

| | | | | | | | | | |
|---|---|---|---|---|---|---|---|---|---|
| Refrigerant | | R410A | | | | | | | |
| Electrical power supply | | 220-240V / 50Hz, 220V / 60Hz (Supplied from outdoor unit) | | | | | | | |
| Input power | | Heating / Fan: 2.5W, Cooling: 12.4W | | | | | | | |
| Running current | | Less than 0.1A | | | | | | | |
| Weight | | 26kg *Accessories: Approx. 1kg | | | | | | | |
| Function | | Heating / Cooling / Auto / Fan *Auto is only available for RA temperature control | | | | | | | |
| | | RA (Return Air) temperature control / SA (Supply Air) temperature control<br>[Must be set at initial setting and not possible to change from remote controller] | | | | | | | |
| RA (Return Air) temperature control | | | | | | | | | |
| Connectable Lossnay unit | | LGH-80RVX-E | | | | LGH-100RVX-E | | | |
| Capacity [kW] | Heating | 10.0 ( 4.0 + 6.0 ) | | | | 13.2 ( 5.1 + 8.1 ) | | | |
| | Cooling | 8.3 ( 3.3 + 5.0 ) | | | | 11.3 ( 4.2 + 7.1 ) | | | |
| SHF | | 0.69 | | | | 0.66 | | | |
| Performance index | Heating | 4.62 | | | | 4.42 | | | |
| | Cooling | 4.76 | | | | 4.98 | | | |
| Airflow range at SP3 and SP4 | | 560 - 1200 $m^3$/h | | | | 700 - 1200 $m^3$/h | | | |
| Connectable outdoor unit | | PUHZ-ZRP50 | | | | PUHZ-ZRP71 | | | |
| Ext. piping | | Diameter Liquid / Gas: 6.35 / 12.7 | | | | Diameter Liquid / Gas: 9.52 / 15.88 | | | |
| | | Maximum length: 50m, Maximum height: 30m | | | | Maximum length: 50m, Maximum height: 30m | | | |
| Required optional parts | | PAC-SH30RJ-E and PAC-SH50RJ-E | | | | - | | | |
| SA (Supply Air) temperature control | | | | | | | | | |
| Connectable Lossnay unit | | LGH-80RVX-E | | | | LGH-100RVX-E | | | |
| Capacity [kW] | Heating | 10.0 ( 4.0 + 6.0 ) | | | | 11.4 ( 5.1 + 6.3 ) | | | |
| | Cooling | 8.3 ( 3.3 + 5.0 ) | | | | 9.5 ( 4.2 + 5.3 ) | | | |
| SHF | | 0.69 | | | | 0.73 | | | |
| Performance index | Heating | 4.62 | | | | 5.09 | | | |
| | Cooling | 4.76 | | | | 5.43 | | | |
| Airflow range at SP3 and SP4 | | 560 - 1200 $m^3$/h | | | | 700 - 1200 $m^3$/h | | | |
| Connectable outdoor unit | | PUHZ-ZRP50 | | | | PUHZ-ZRP50 | | | |
| Ext. piping | | Diameter Liquid / Gas: 6.35 / 12.7 | | | | Diameter Liquid / Gas: 6.35 / 12.7 | | | |
| | | Maximum length: 50m, Maximum height: 30m | | | | Maximum length: 50m, Maximum height: 30m | | | |
| Required optional parts | | PAC-SH30RJ-E and PAC-SH50RJ-E | | | | PAC-SH30RJ-E and PAC-SH50RJ-E | | | |
| Ventilation specifications | | | | | | | | | |
| Connectable Lossnay unit | | LGH-80RVX-E | | | | LGH-100RVX-E | | | |
| Fan speed | | SP4 | SP3 | SP2 | SP1 | SP4 | SP3 | SP2 | SP1 |
| Airflow | [$m^3$/h] | 800 | 600 | 400 | 200 | 1,000 | 750 | 500 | 250 |
| | [L/s] | 222 | 167 | 111 | 56 | 278 | 208 | 139 | 69 |
| External static pressure [Pa] | | 130 | 73 | 33 | 8 | 130 | 73 | 33 | 8 |

## Characteristic Curves

**LGH-80RVX-E**

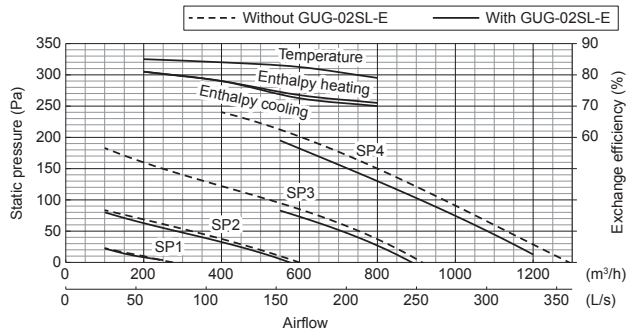


**LGH-100RVX-E**

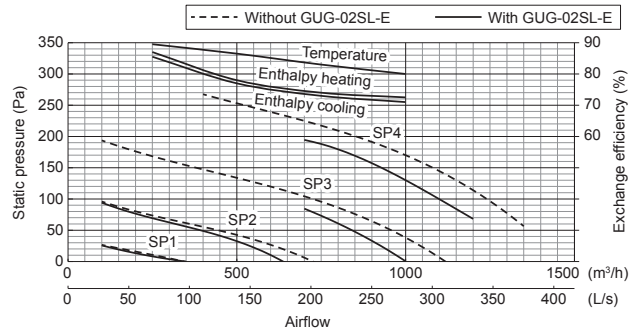


## Dimensions

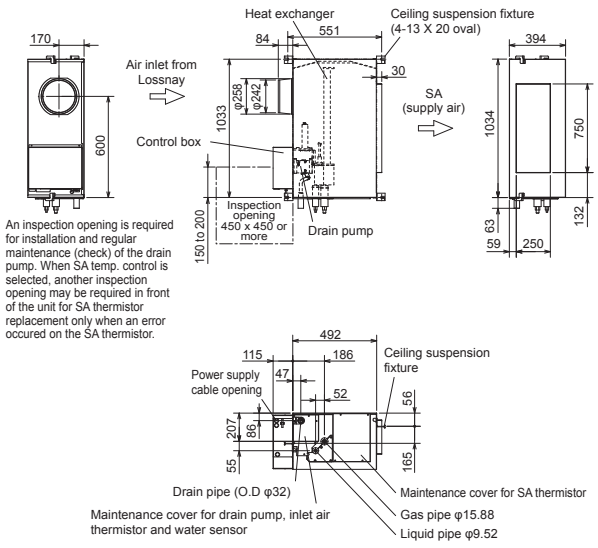

# Specifications

## GUG-03SL-E (Connection to LGH-150RVX-E or LGH-200RVX-E)

GUG-03SL-E

| | | | | | | | | | |
|---|---|---|---|---|---|---|---|---|---|
| Refrigerant | | R410A | | | | | | | |
| Electrical power supply | | 220-240V / 50Hz, 220V / 60Hz (Supplied from outdoor unit) | | | | | | | |
| Input power | | Heating / Fan: 2.5W, Cooling: 12.4W | | | | | | | |
| Running current | | Less than 0.1A | | | | | | | |
| Weight | | 28kg *Accessories: Approx. 1kg | | | | | | | |
| Function | | Heating / Cooling / Auto / Fan *Auto is only available for RA temperature control | | | | | | | |
| | | RA (Return Air) temperature control / SA (Supply Air) temperature control<br>[Must be set at initial setting and not possible to change from remote controller] | | | | | | | |
| RA (Return Air) temperature control | | | | | | | | | |
| Connectable Lossnay unit | | LGH-150RVX-E | | | | LGH-200RVX-E | | | |
| Capacity [kW] | Heating | 20.7 ( 7.7 + 13.0 ) | | | | 23.8 ( 10.3 + 13.5 ) | | | |
| | Cooling | 15.8 ( 6.3 + 9.5 ) | | | | 18.4 ( 8.4 + 10.0 ) | | | |
| SHF | | 0.68 | | | | 0.76 | | | |
| Performance index | Heating | 4.24 | | | | 5.02 | | | |
| | Cooling | 5.27 | | | | 5.86 | | | |
| Airflow range at SP3 and SP4 | | 1050 - 2250 $m^3/h$ | | | | 1050 - 2600 $m^3/h$ | | | |
| Connectable outdoor unit | | PUHZ-ZRP100 | | | | PUHZ-ZRP100 | | | |
| Ext. piping | | Diameter Liquid / Gas: 9.52 / 15.88 | | | | Diameter Liquid / Gas: 9.52 / 15.88 | | | |
| | | Maximum length: 75m, Maximum height: 30m | | | | Maximum length: 75m, Maximum height: 30m | | | |
| SA (Supply Air) temperature control | | | | | | | | | |
| Connectable Lossnay unit | | LGH-150RVX-E | | | | LGH-200RVX-E | | | |
| Capacity [kW] | Heating | 16.6 ( 7.7 + 8.9 ) | | | | 19.5 ( 10.3 + 9.2 ) | | | |
| | Cooling | 13.4 ( 6.3 + 7.1 ) | | | | 15.9 ( 8.5 + 7.4 ) | | | |
| SHF | | 0.85 | | | | 0.90 | | | |
| Performance index | Heating | 5.46 | | | | 6.30 | | | |
| | Cooling | 5.32 | | | | 5.85 | | | |
| Airflow range at SP3 and SP4 | | 1050 - 2250 $m^3/h$ | | | | 1050 - 2600 $m^3/h$ | | | |
| Connectable outdoor unit | | PUHZ-ZRP71 | | | | PUHZ-ZRP71 | | | |
| Ext. piping | | Diameter Liquid / Gas: 9.52 / 15.88 | | | | Diameter Liquid / Gas: 9.52 / 15.88 | | | |
| | | Maximum length: 50m, Maximum height: 30m | | | | Maximum length: 50m, Maximum height: 30m | | | |
| Ventilation specifications | | | | | | | | | |
| Connectable Lossnay unit | | LGH-150RVX-E | | | | LGH-200RVX-E | | | |
| Fan speed | | SP4 | SP3 | SP2 | SP1 | SP4 | SP3 | SP2 | SP1 |
| Airflow | [$m^3/h$] | 1,500 | 1,125 | 750 | 375 | 2,000 | 1,500 | 1,000 | 500 |
| | [L/s] | 417 | 313 | 208 | 104 | 556 | 417 | 278 | 139 |
| External static pressure [Pa] | | 150 | 84 | 38 | 9 | 105 | 59 | 26 | 7 |

## Characteristic Curves

### LGH-150RVX-E

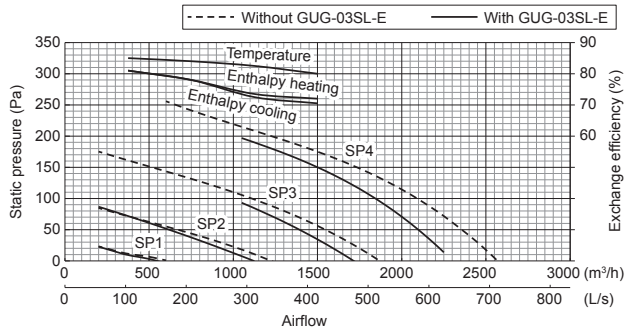


### LGH-200RVX-E

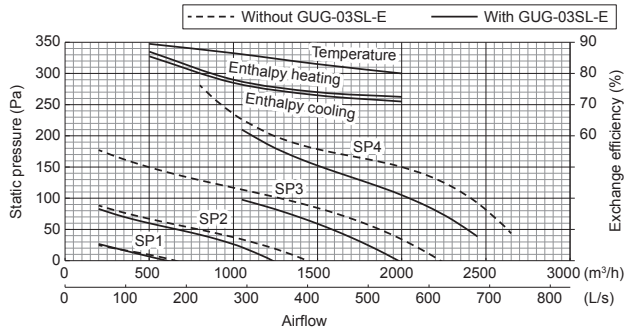


## Dimensions

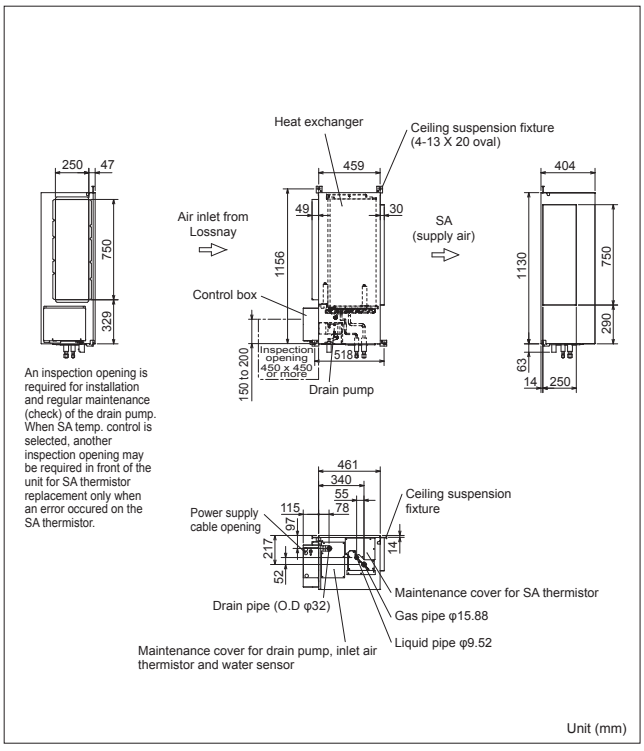

## GUG-03SL-E (Connection to LGH-150RVXT-E, LGH-200RVXT-E or LGH-250RVXT-E)

| | | | | | | | | | | | | |
|---|---|---|---|---|---|---|---|---|---|---|---|---|
| Refrigerant | | R410A | | | | | | | | | | |
| Electrical power supply | | 220-240V / 50Hz, 220V / 60Hz (Supplied from outdoor unit) | | | | | | | | | | |
| Input power | | Heating / Fan: 2.5W, Cooling: 12.4W | | | | | | | | | | |
| Running current | | Less than 0.1A | | | | | | | | | | |
| Weight | | 28kg *Accessories: Approx. 1kg | | | | | | | | | | |
| Function | | Heating / Cooling / Auto / Fan *Auto is only available for RA temperature control | | | | | | | | | | |
| | | RA (Return Air) temperature control / SA (Supply Air) temperature control<br>[Must be set at initial setting and not possible to change from remote controller] | | | | | | | | | | |
| RA (Return Air) temperature control | | | | | | | | | | | | |
| Connectable Lossnay unit | | LGH-150RVXT-E | | | | LGH-200RVXT-E | | | | LGH-250RVXT-E | | |
| Capacity [kW] | Heating | 20.4 ( 7.4 + 13.0 ) | | | | 23.8 ( 10.3 + 13.5 ) | | | | 26.1 ( 12.1 + 14.0 ) | | |
| | Cooling | 15.7 ( 6.2 + 9.5 ) | | | | 18.4 ( 8.4 + 10.0 ) | | | | 22.3 ( 9.8 + 12.5 ) | | |
| SHF | | 0.68 | | | | 0.76 | | | | 0.87 | | |
| Performance index | Heating | 4.07 | | | | 4.86 | | | | 4.75 | | |
| | Cooling | 5.03 | | | | 5.59 | | | | 4.59 | | |
| Airflow range at SP3 and SP4 | | 1050 - 2250 $m^3/h$ | | | | 1050 - 2600 $m^3/h$ | | | | 1750 - 2880 $m^3/h$ | | |
| Connectable outdoor unit | | PUHZ-ZRP100 | | | | PUHZ-ZRP100 | | | | PUHZ-ZRP125 | | |
| Ext. piping | | Diameter Liquid / Gas: 9.52 / 15.88 | | | | Diameter Liquid / Gas: 9.52 / 15.88 | | | | Diameter Liquid / Gas: 9.52 / 15.88 | | |
| | | Maximum length: 75m, Maximum height: 30m | | | | Maximum length: 75m, Maximum height: 30m | | | | Maximum length: 75m, Maximum height: 30m | | |
| SA (Supply Air) temperature control | | | | | | | | | | | | |
| Connectable Lossnay unit | | LGH-150RVXT-E | | | | LGH-200RVXT-E | | | | LGH-250RVXT-E | | |
| Capacity [kW] | Heating | 16.3 ( 7.4 + 8.9 ) | | | | 19.5 ( 10.3 + 9.2 ) | | | | 21.6 ( 12.1 + 9.5 ) | | |
| | Cooling | 13.3 ( 6.2 + 7.1 ) | | | | 15.9 ( 8.5 + 7.4 ) | | | | 17.6 ( 9.8 + 7.8 ) | | |
| SHF | | 0.86 | | | | 0.90 | | | | 0.95 | | |
| Performance index | Heating | 5.16 | | | | 6.01 | | | | 5.97 | | |
| | Cooling | 5.03 | | | | 5.54 | | | | 5.31 | | |
| Airflow range at SP3 and SP4 | | 1050 - 2250 $m^3/h$ | | | | 1050 - 2600 $m^3/h$ | | | | 1000 - 2600 $m^3/h$ | | |
| Connectable outdoor unit | | PUHZ-ZRP71 | | | | PUHZ-ZRP71 | | | | PUHZ-ZRP71 | | |
| Ext. piping | | Diameter Liquid / Gas: 9.52 / 15.88 | | | | Diameter Liquid / Gas: 9.52 / 15.88 | | | | Diameter Liquid / Gas: 9.52 / 15.88 | | |
| | | Maximum length: 50m, Maximum height: 30m | | | | Maximum length: 50m, Maximum height: 30m | | | | Maximum length: 50m, Maximum height: 30m | | |
| Ventilation specifications | | | | | | | | | | | | |
| Connectable Lossnay unit | | LGH-150RVXT-E | | | | LGH-200RVXT-E | | | | LGH-250RVXT-E | | |
| Fan speed | | SP4 | SP3 | SP2 | SP1 | SP4 | SP3 | SP2 | SP1 | SP4 | SP3 | SP2 | SP1 |
| Airflow | [$m^3/h$] | 1,500 | 1,125 | 750 | 375 | 2,000 | 1,500 | 1,000 | 500 | 2,500 | 1,875 | 1,250 | 625 |
| | [L/s] | 417 | 313 | 208 | 104 | 556 | 417 | 278 | 139 | 694 | 521 | 347 | 174 |
| External static pressure [Pa] | | 150 | 84 | 38 | 9 | 145 | 82 | 36 | 9 | 140 | 79 | 35 | 9 |

## Characteristic Curves

**Note** The graphs below show the supply air only.

**LGH-150RVXT-E**

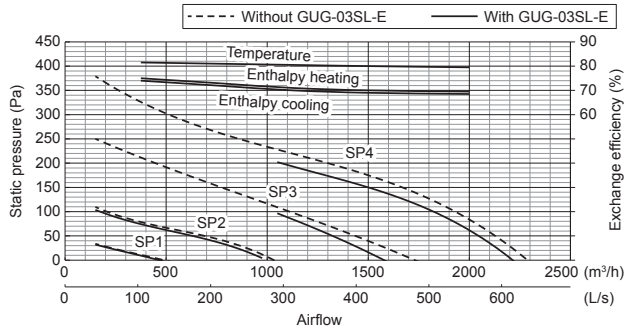


**LGH-200RVXT-E**

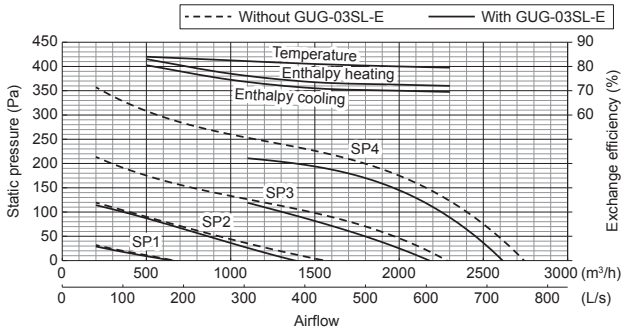


**LGH-250RVXT-E**

RA temperature control

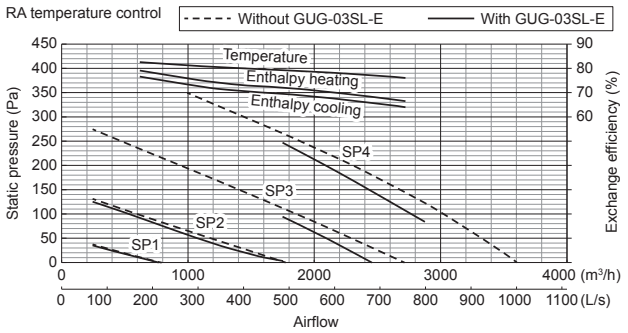


SA temperature control

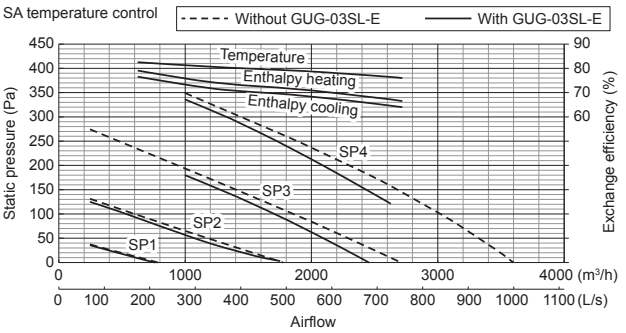


## Attention

1. The running current and input power are based on 230V/50Hz.
2. The cooling and heating capacities are based on the air conditions listed below and the rated airflow of fan speed 4.
   Cooling Indoor: 27°CDB/19°CWB, Outdoor: 35°CDB/24°CWB
   Heating Indoor: 20°CDB/15°CWB, Outdoor: 7°CDB/6°CWB
3. The first figure in ( ) of the capacity specification is the heat recovery energy of the Lossnay unit. The second figure is the capacity specification for the Dx-coil connected to the outdoor unit.
4. "Performance index" is the calculated value at the temperature conditions above, and is for reference purpose only.
   Performance index = Total capacity ÷ total power consumption of outdoor unit and Lossnay unit
5. The external static pressure listed in the tables includes the static pressure loss of the Dx-coil unit when using a 50cm straight duct between the Lossnay and Dx-coil units. When the duct work between the Lossnay and Dx-coil units is longer and/or bent, the pressure loss of the duct work should be included in the pressure loss calculation.
6. The designed airflow of the system (Lossnay, Dx-coil and duct work) at fan speed 3 and 4 should be kept within "Airflow range at SP3 and SP4" listed in the tables. This range is shown as the solid line in graphs of the characteristic curves. If the Lossnay airflow is out of this range, the compressor of the outdoor unit may stop for self-protection purposes.
7. By installing the Dx-coil unit with a Lossnay unit, the air blow noise level is quieter at fan speed 4. Please refer to the "Direct Expansion coil unit for Lossnay" catalog.
8. Refrigerant leakage contributes to climate change. Refrigerant with lower global warming potential (GWP) would contribute less to global warming than a refrigerant with higher GWP, if leaked to the atmosphere. This appliance contains a refrigerant fluid with a GWP equal to 1975. This means that if 1kg of this refrigerant fluid would be leaked to the atmosphere, the impact on global warming would be 1975 times higher than 1kg of $CO_2$, over a period of 100 years. Never try to interfere with the refrigerant circuit or disassemble the product yourself and always ask a professional.

# Residential Use Lossnay

Mitsubishi Electric offers decentralized and centralized ventilation solutions for optimizing your indoor air quality by Lossnay.

## Decentralized Ventilation Solution

Install a wall-mounted Lossnay in each room.
The heat recovery system provides fresh air at a comfortable air temperature.
Total heat exchangers effectively reduce heat loss.

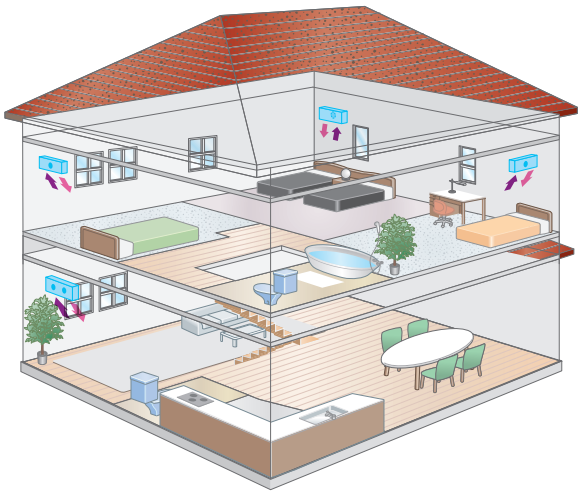

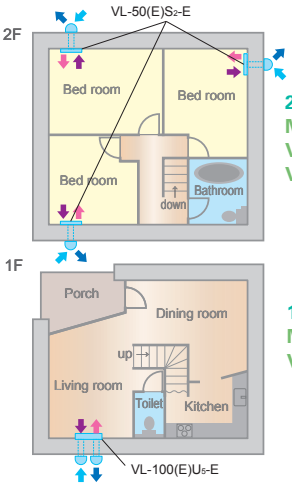


**2F**
**Model:**
**VL-50(E)$S_2$-E**
**VL-50$SR_2$-E**

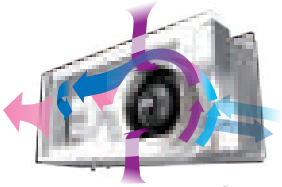

**1F**
**Model:**
**VL-100(E)$U_5$-E**

## Centralized Ventilation Solution

One Lossnay unit provides 24-hour ventilation for the entire house, from living room and bedrooms to the bathroom. The heat recovery system provides fresh air at a comfortable air temperature. A sensible heat exchanger effectively reduces excess humidity in the winter.

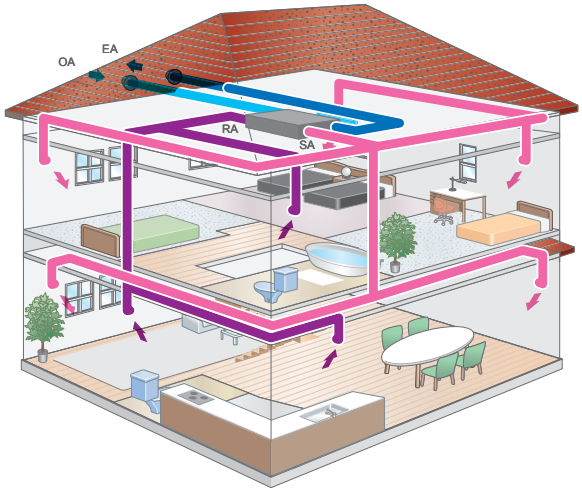


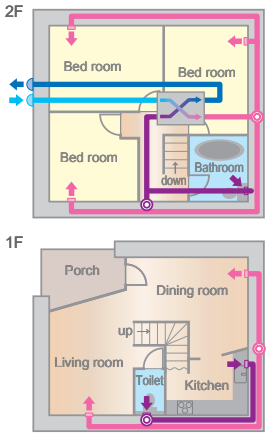


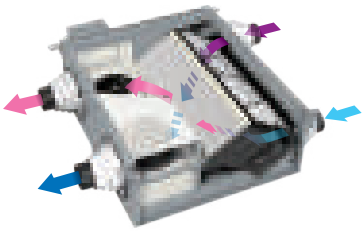

**Model:**
**VL-220CZGV-E**

# Decentralized ventilation: VL-50(E)S2-E, VL-50SR2-E and VL-100(E)U5-E

## Product Advantages

**Simultaneous Air Supply and Exhaust**

Air is supplied and exhausted simultaneously while transferring the heat.

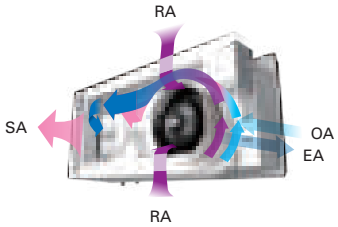


**Energy Efficient**

- Total heat exchanger minimizes heat loss.
- A temperature efficiency of over 80%* is achieved.

*VL-100(E)U5-E at low fan speed at 230V 50Hz
*VL-50(E)S2-E and VL-50SR2-E at low fan speed at 230V 50Hz

The low noise level is good for bedrooms and children's rooms.

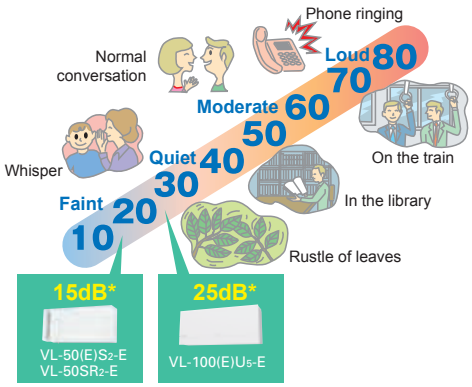


*Condition: 50Hz, 230V, low fan speed

**Sound Insulation**

A sound insulation effect reduces noise generated outside.

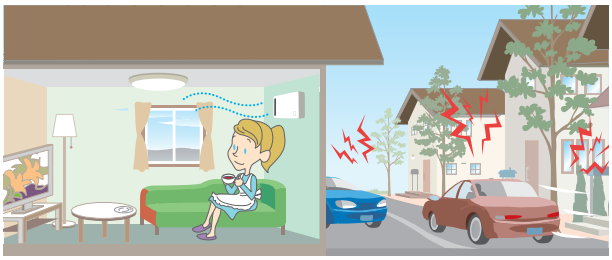

| Sound Insulation Effect | Average sound pressure on ~ side (dB) | Average sound pressure on ~ side (dB) | Difference |
|---|---|---|---|
| | 103.4 | 63.2 | 40.2 |

*Tested using VL-08S2-AE
*Measured at an average sound pressure level of more than 30dB at 500Hz according to JIS A1416.
VL-08S2-AE is a dedicated Japanese model equivalent to VL-50(E)S2-E

## Product Features

**Stylish Design**

Matches any interior decor to create a comfortable room.

VL-50(E)S2-E
VL-50SR2-E

VL-100(E)U5-E

**Easy Maintenance**

The only maintenance that is required is cleaning the outside and exhaust air filters. The filters are easily accessible for quick and thorough cleaning.

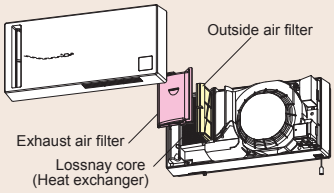


VL-50(E)S2-E
VL-50SR2-E

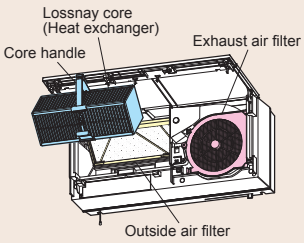


VL-100(E)U5-E

## Flexible Installation (For VL-50(E)S2-E and VL-50SR2-E)

The VL-50(E)S2-E and VL-50SR2-E can be installed not only horizontally but also vertically. Their flexible installation makes them a perfect fit in various types of rooms.

| Horizontal Installation | Vertical Installation Example |
|---|---|

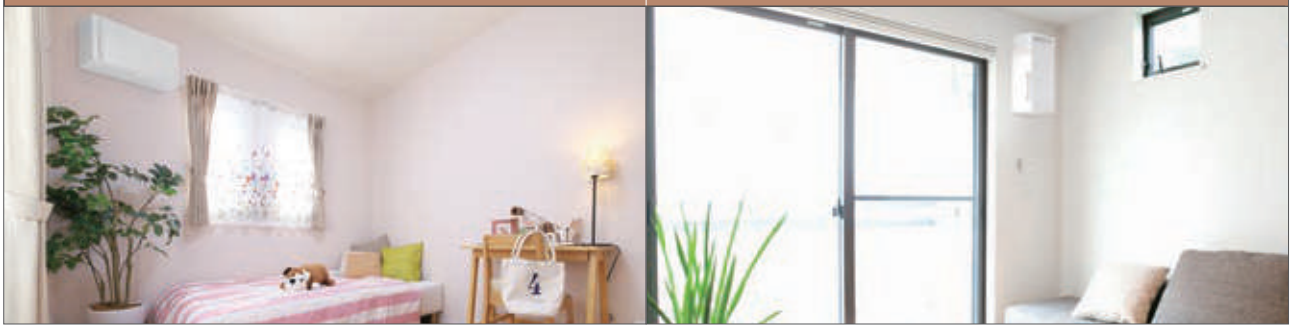

# Centralized ventilation: VL-220CZGV-E

## Product Advantages

### Newly Developed Heat Exchanger

- During ventilation, Lossnay recovers warmth in the winter and keeps air cool in the summer.
- Reduces heating and cooling loads with a maximum exchange efficiency of 86%*.

**Normal Square Heat Exchanger**

Simple structure contributes to minimising pressure loss and reducing power consumption.

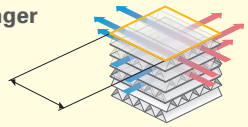

**Diamond Heat Exchanger**

The diamond design allows for longer air passages and helps realise higher exchange efficiency.

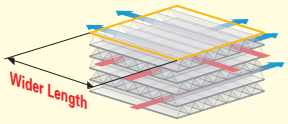


*Fan speed 1

### Energy Efficient

- The highest energy-saving performance in its class. (8.5W* minimum input power)
- Saves heating and cooling costs by minimising energy loss that occurs during ventilation.

### Quiet

- At an ultra quiet 14dB*, it is the quietest product in its class.
- Blocks outside noise for a more comfortable environment.

## Product Features

### Precise Fan Speed Adjustment Function

Each main fan speed value can be further adjusted slightly.
Use the PZ-61DR-E remote controller to adjust the speed.

1) Considering the total hours of Lossnay operation (filter clogging), fan power can be adjusted automatically after a given period of time.
2) After the unit is installed, fine adjustments can be made if the airflow is slightly lower or higher than the desired airflow. (Fan speed 4 can only be adjusted 1 or 2 steps down.)

**■P-Q curve image**

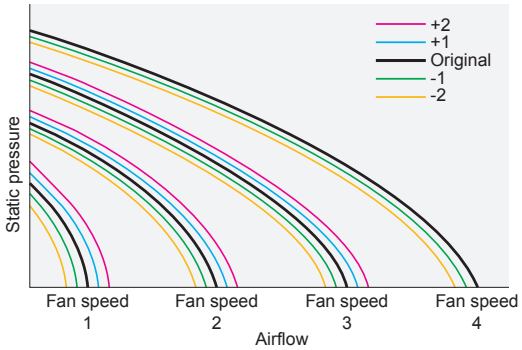


### Multi Ventilation (Power Supply and Exhaust) Mode

This mode allows the air supply/exhaust balance to be varied dynamically. The supply/exhaust balance can be selected to suit the usage environment.

| Normal Mode | Power Supply Mode | | Power Exhaust Mode | |
|---|---|---|---|---|
| Relax time | Adjust the indoor pressure balance in case a separate exhaust is installed | Increase indoor pressure to prevent unfiltered drafts from coming in | Keep steam inside of the shower room | Prevent odors from spreading |

### Weekly Timer

Operation patterns for each day of the week. ON/OFF and airflow can be set using the weekly timer function (up to eight zones per day). This function contributes to enhanced energy-saving operation.

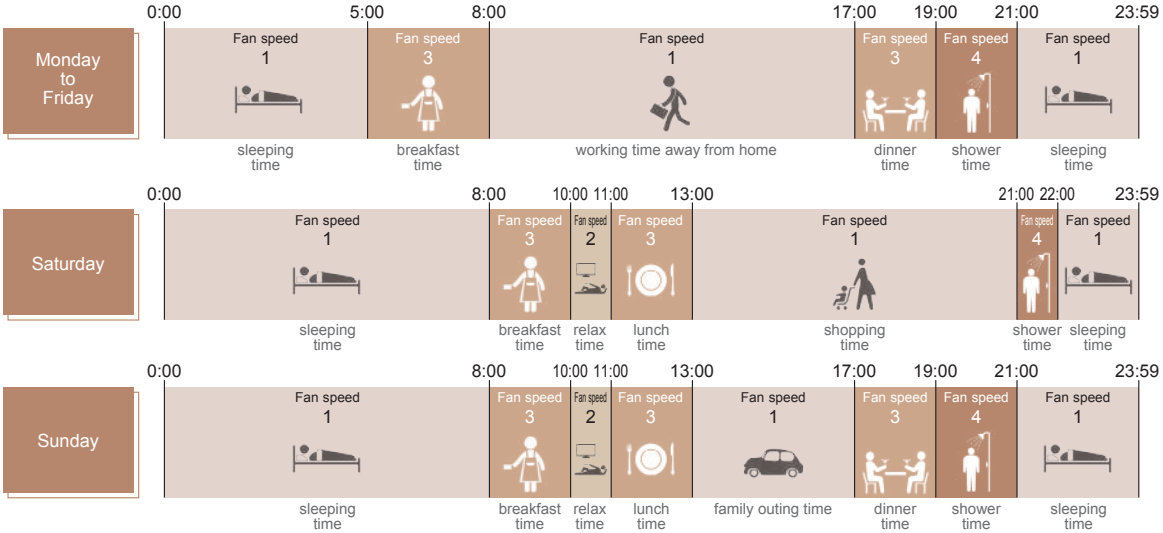


*Example for reference only.

# Residential Lossnay Specifications

## Model: VL-50S2-E (Pull-Switch Model) and VL-50ES2-E (Wall-Switch Model)

| Model | VL-50(E)S2-E | | | | | | | |
|---|---|---|---|---|---|---|---|---|
| Electrical power supply | 220V/50Hz | | 230V/50Hz | | 240V/50Hz | | 220V/60Hz | |
| Fan speed | High | Low | High | Low | High | Low | High | Low |
| Airflow (m³/h) | 51 | 15 | 52.5 | 16 | 54 | 17 | 54 | 17 |
| Power consumption (W) | 19 | 4 | 20 | 4.5 | 21 | 5 | 21 | 5.5 |
| Temperature exchange efficiency (%) | 70 | 86 | 69 | 85 | 68 | 84 | 68 | 84 |
| Noise level (dB) | 36.5 | 14 | 37 | 15 | 37.5 | 15.5 | 37.5 | 15.5 |
| Weight (kg) | 6.2 | | | | | | | |
| Specific energy consumption class | C | | | | | | | |

*Figures in the chart were measured according to Japan Industrial Standard (JIS B 8628) with the shutter knob in open position.

### Dimensions

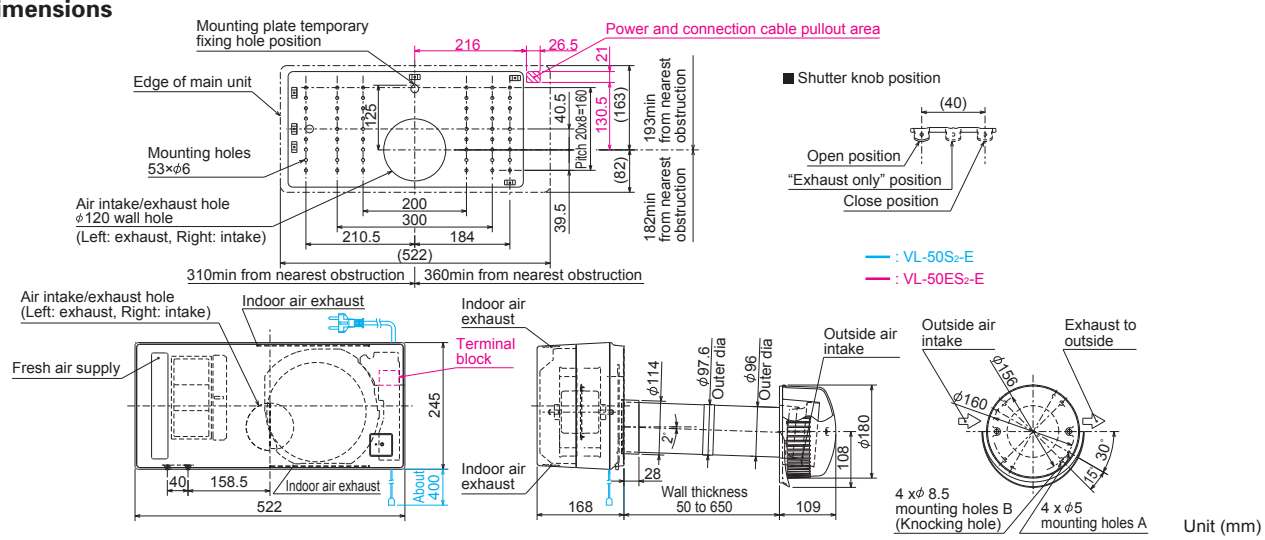


## Model: VL-50SR2-E (Remote Controller Model)

| Model | VL-50SR2-E | | | | | | | |
|---|---|---|---|---|---|---|---|---|
| Electrical power supply | 220V/50Hz | | 230V/50Hz | | 240V/50Hz | | 220V/60Hz | |
| Fan speed | High | Low | High | Low | High | Low | High | Low |
| Airflow (m³/h) | 51 | 15 | 52.5 | 16 | 54 | 17 | 54 | 17 |
| Power consumption (W) | 19 | 4.5 | 20 | 5 | 21 | 5.5 | 21 | 6 |
| Temperature exchange efficiency (%) | 70 | 86 | 69 | 85 | 68 | 84 | 68 | 84 |
| Noise level (dB) | 36.5 | 14 | 37 | 15 | 37.5 | 15.5 | 37.5 | 15.5 |
| Weight (kg) | 6.2 | | | | | | | |
| Specific energy consumption class | C | | | | | | | |

*Figures in the chart were measured according to Japan Industrial Standard (JIS B 8628) with the shutter knob in open position.

### Dimensions

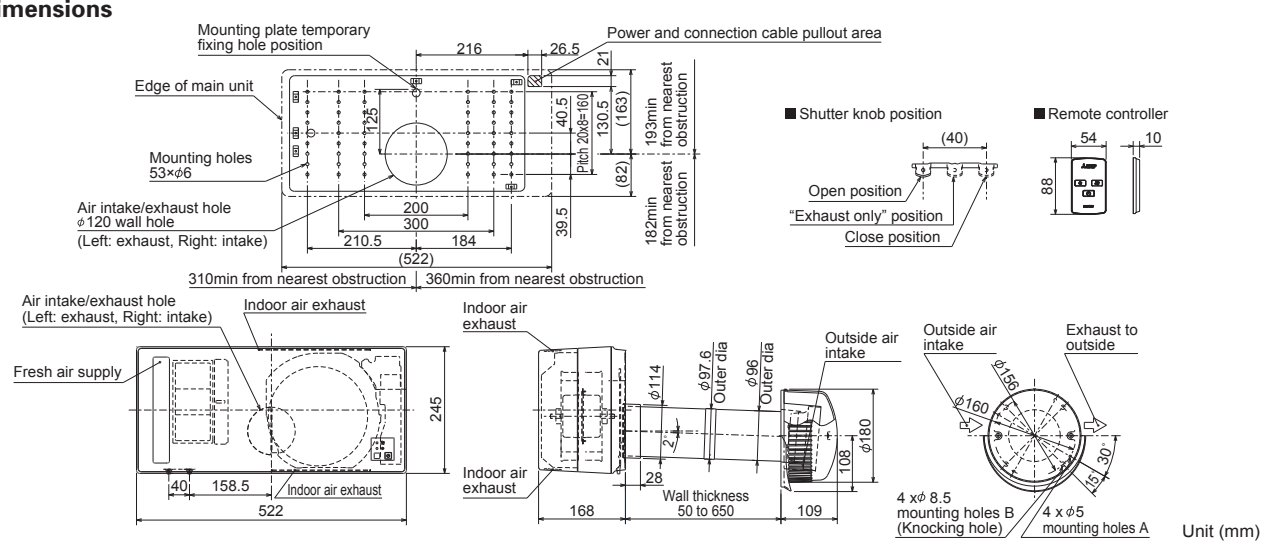

## Model: VL-100U5-E (Pull-Switch Model) and VL-100EU5-E (Wall-Switch Model)

| Model | VL-100(E)U5-E | | | | | | | |
|---|---|---|---|---|---|---|---|---|
| Electrical power supply | 220V/50Hz | | 230V/50Hz | | 240V/50Hz | | 220V/60Hz | |
| Fan speed | High | Low | High | Low | High | Low | High | Low |
| Airflow (m³/h) | 100 | 55 | 105 | 60 | 106 | 61 | 103 | 57 |
| Power consumption (W) | 30 | 13 | 31 | 15 | 34 | 17 | 34 | 17 |
| Temperature exchange efficiency (%) | 73 | 80 | 73 | 80 | 72 | 79 | 73 | 80 |
| Noise level (dB) | 36.5 | 24 | 37 | 25 | 38 | 27 | 38 | 25 |
| Weight (kg) | 7.5 | | | | | | | |
| Specific energy consumption class | B | | | | | | | |

*Figures in the chart were measured according to Japan Industrial Standard (JIS B 8628) with the shutter knob in open position.

### Dimensions

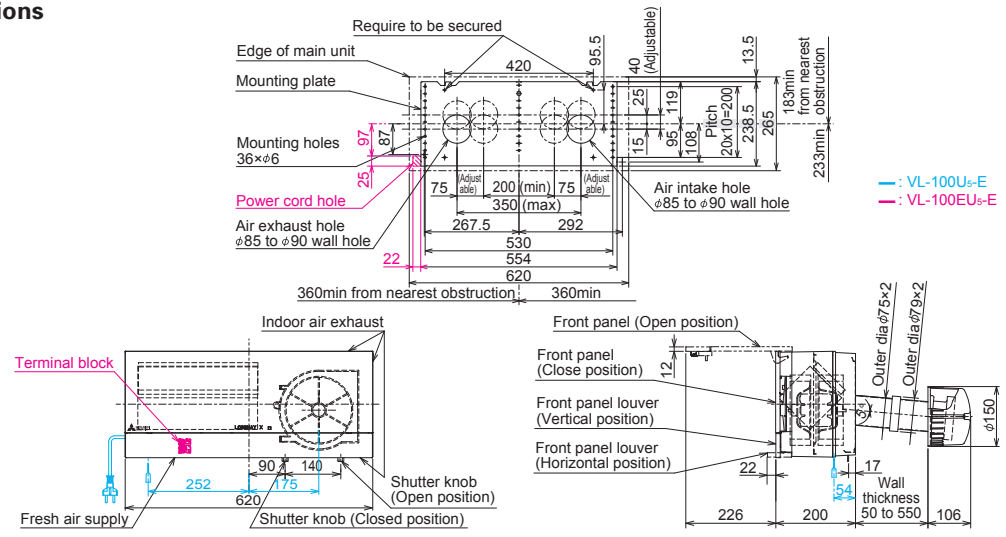


## Model: VL-220CZGV-E

| Model | | VL-220CZGV-E | | | |
|---|---|---|---|---|---|
| Electrical power supply | | 220-240V/50Hz 220V/60Hz | | | |
| Ventilation mode | | Heat recovery mode | | | |
| Fan speed | | Fan speed 4 | Fan speed 3 | Fan speed 2 | Fan speed 1 |
| Running current | | 0.60 | 0.29 | 0.18 | 0.11 |
| Input power (W) | | 80 | 35 | 18.5 | 8.5 |
| Airflow | (m³/h) | 230 | 165 | 120 | 65 |
| | (L/s) | 64 | 46 | 33 | 18 |
| External static pressure (Pa) | | 164 | 84 | 44 | 13 |
| Temperature exchange efficiency (%) | | 82 | 84 | 85 | 86 |
| Noise level (dB) | | 31 | 25 | 19 | 14 |
| Weight (kg) | | 31 | | | |
| Specific energy consumption class | | A | | | |

*Figures in the chart were measured according to Japan Industrial Standard (JIS B 8628). Characteristic curves were measured by chamber method.

### Characteristic Curve

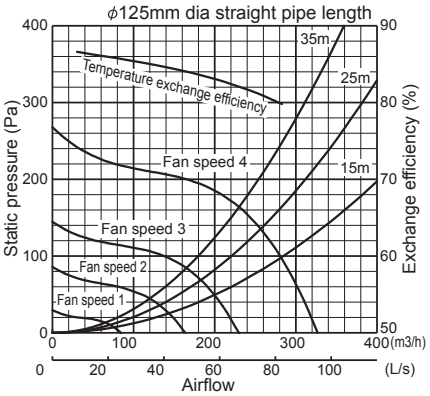


### Dimensions

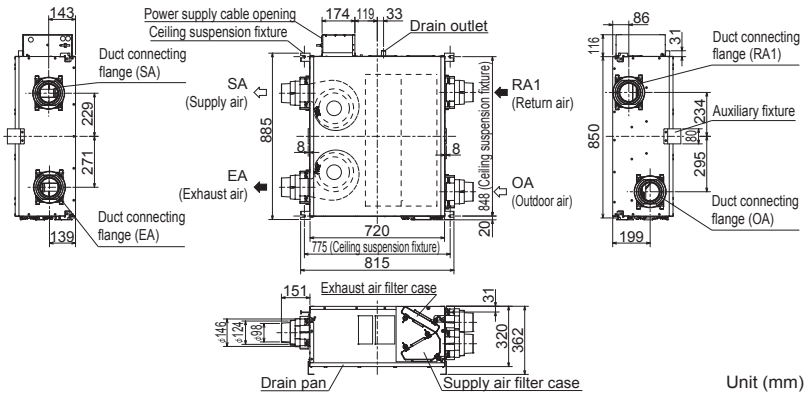

# Accessories

## Parts for VL-50(E)S2-E and VL-50SR2-E

Filters, Extension Pipe and Stainless Hood

| Type | Replacement Filter | High Efficiency Filter | Extension Pipe | Joint | Stainless Hood |
|---|---|---|---|---|---|
| Design |  | 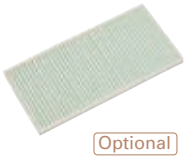 Optional | Optional | Optional | Optional |
| Model | P-50F2-E | P-50HF2-E | P-50P-E | P-50PJ-E | P-50VSQ5-E |
| Feature | – | – | Total length when connected to the joint is 350mm. | Joint for extension pipe | Stylish stainless hood |
| Classification (EN779:2012) | G3 | – | – | – | – |
| Classification (ISO16890) | Coarse 35% | ePM10 75% | – | – | – |

## Parts for VL-100(E)U5-E

Filters and Extension Pipe

| Type | Replacement Filter | High Efficiency Filter | Extension Pipe | Joint |
|---|---|---|---|---|
| Design | | 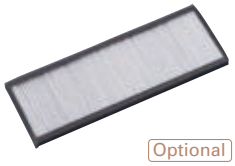 Optional | Optional | Optional |
| Model | P-100F5-E | P-100HF5-E | P-100P-E | P-100PJ-E |
| Feature | – | – | Total length when connected to the joint is 300mm. | • Joint for extension pipe<br>• Screw-in method |
| Classification (EN779:2012) | G3 | M6 | – | – |
| Classification (ISO16890) | Coarse 35% | ePM10 70% | – | – |

## Parts for VL-220CZGV-E

Bypass Damper

Model: P-133DUE-E

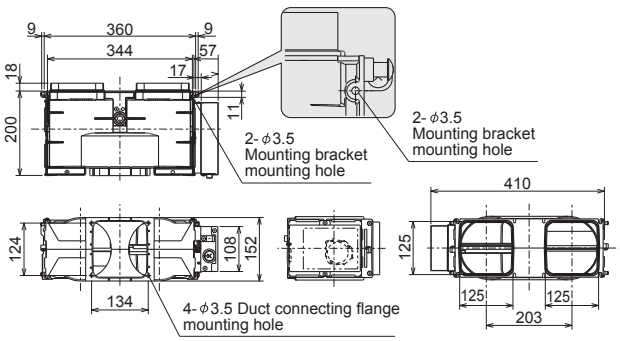


Unit (mm)

Filters

| Type | Standard Replacement Filter | Medium Efficiency Exhaust Air Filter | High Efficiency Supply Air Filter |
|---|---|---|---|
| Design | | Optional | 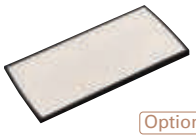 Optional |
| Model | P-220F-E | P-220EMF-E | P-220SHF-E |
| Classification (EN779:2012) | G3 | G4 | M6 |
| Classification (ISO16890) | Coarse 35% | ePM10 50% | ePM10 70% |

⚠ NOTICE

- Do not install indoor units in areas (e.g. mobile phone base stations) where the emission of VOCs such as phthalate compounds and formaldehyde is known to be high as this may result in a chemical reaction.
- Our air-conditioning equipments and heat pumps contain a fluorinated greenhouse gas, R410A (GWP: 2088) or R32 (GWP: 675). *These GWP values are based on Regulation (EU) No.517/2014 from IPCC 4th edition. In case of Regulation (EU) No.626/2011 from IPCC 3rd edition, these are as follows. R410A (GWP: 1975), R32 (GWP: 550)
- When installing or relocating or servicing our air-conditioning equipment, use only the specified refrigerant (R410A or R32) to charge the refrigerant lines.
  Do not mix it with any other refrigerant and do not allow air to remain in the lines.
  If air is mixed with the refrigerant, then it can be the cause of abnormal high pressure in the refrigerant lines, and may result in an explosion and other hazards.
  The use of any refrigerant other than that specified for the system will cause mechanical failure, system malfunction or unit breakdown. In the worst case, this could lead to a serious impediment to securing product safety.

eco Changes

**for a greener tomorrow**

Eco Changes is the Mitsubishi Electric Group's environmental statement, and expresses the Group's stance on environmental management. Through a wide range of businesses, we are helping contribute to the realization of a sustainable society.

**MITSUBISHI ELECTRIC CORPORATION**
HEAD OFFICE: TOKYO BUILDING, 2-7-3 MARUNOUCHI, CHIYODA-KU, TOKYO 100-8310, JAPAN
http://Global.MitsubishiElectric.com/

CE

ENVIRONMENTAL VISION 2021 TECHNOLOGY & ACTION

S-179-9-CA519-A SI2003 Printed in Japan (IP)

New publication, effective Mar. 2020.
Specifications are subject to change without notice.